Key No. 4.9 Lower Soldier Pile Wall, all sections, W16x67, Grade 50, Spacing 8 ft

Retained height of wall: max h 12 ft

~~Soil conditions for calculation per geotechnical report~~

To account for pressure from the upper wall, the loads are increased by 15% per geotechnical report addendum file no. 14-032.200

Equivalent Fluid weight	active	1.15 x 35	41 pcf
Fluid unit weight	passive		~~300 pcf~~
	Seismic		375 pcf
Horizontal seismic load	1.15 x 8xH =	1.15 x 8 x 12	~~110 psf~~
Pile hole diameter			2.5 ft

For calculation see attached design sheets

Soldier pile section		~~W16x67~~
Soldier pile min embedment	16.25 ft, say	18 ft

Lagging (for all wall sections) uniform load 250 psf per geotechnical report
w/ 7.5 ft member length,
max M = 1/8 x 250 x 7.5^2 x 12 = 21,100 lb-in
req S = 21,100 / 850 = 24.8 in^3
w/ 4x12" lags, act S = 1/6 x 12 x 3.5^2 = 24.5 in^3 ~ 24.8

4634 Mercer Way
Key No. 4.9 Lower Wall

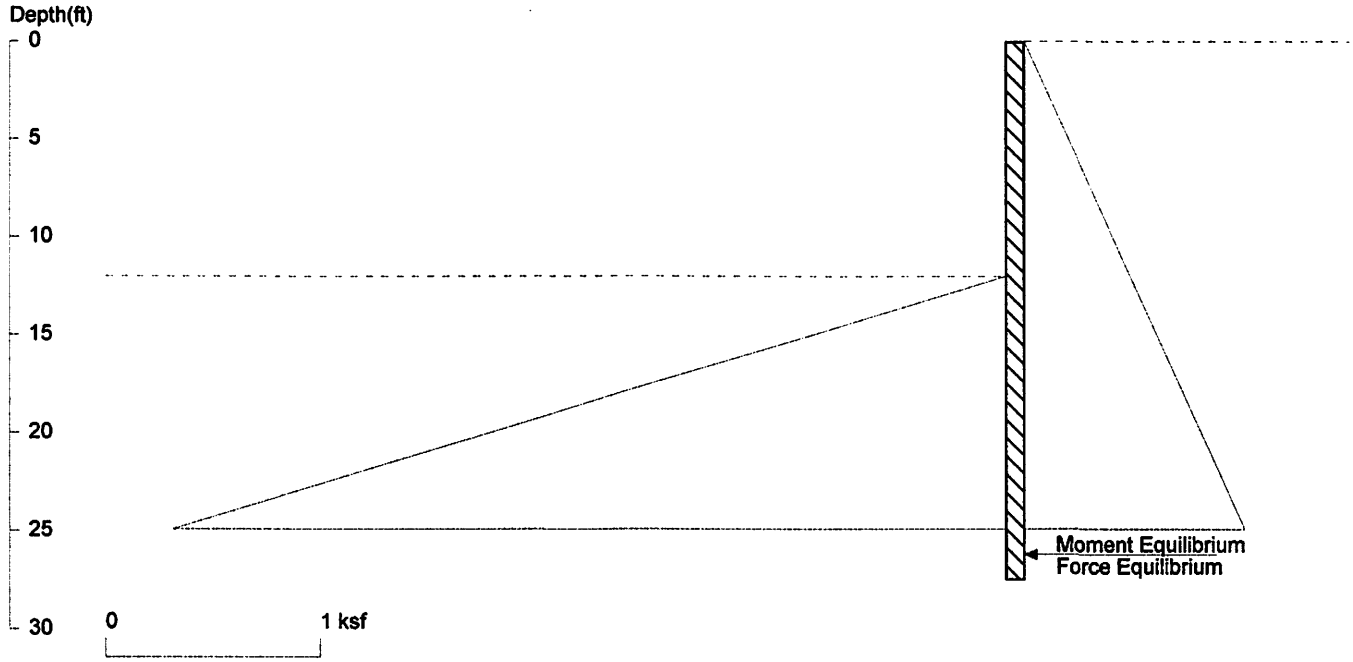

<ShoringSuite> CIVILTECH SOFTWARE USA www.civiltech.com

Licensed to 4324324234 3424343 Date: 8/12/2016

File: E:\Projects 2016\4634 Mercer Way Barcelo\4634 E Mercer structural\4_9 Soldier Pile Lower Wall.sh8

Wall Height=12.0 Pile Diameter=2.5 Pile Spacing=8.0 Wall Type: 2. Soldier Pile, Drilled

PILE LENGTH: Min. Embedment=15.50 Min. Pile Length=27.50
MOMENT IN PILE: Max. Moment=210.26 per Pile Spacing=8.0 at Depth=18.77

PILE SELECTION:
Request Min. Section Modulus = 76.5 in3/pile=1252.92 cm3/pile, Fy= 50 ksi = 345 MPa, Fb/Fy=0.66
W16X67 has Section Modulus = 117.0 in3/pile=1917.28 cm3/pile. It is greater than Min. Requirements!
Top Deflection = 0.88(in) based on E (ksi)=29000.00 and I (in4)/pile=954.0

DRIVING PRESSURES (ACTIVE, WATER, & SURCHARGE):

Z1	P1	Z2	P2	Slope
0	0	99	4.059	0.041

PASSIVE PRESSURES:

Z1	P1	Z2	P2	Slope
12	0	99	26.10	0.3

ACTIVE SPACING:

No.	Z depth	Spacing
1	0.00	8.00
2	12.00	2.50

PASSIVE SPACING:

No.	Z depth	Spacing
1	12.00	5.00

UNITS: Width,Spacing,Diameter,Length,and Depth - ft; Force - kip; Moment - kip-ft
Friction,Bearing,and Pressure - ksf; Pres. Slope - kip/ft3; Deflection - in

4634 Mercer Way

Key No. 4.9 Lower Wall with seismic load

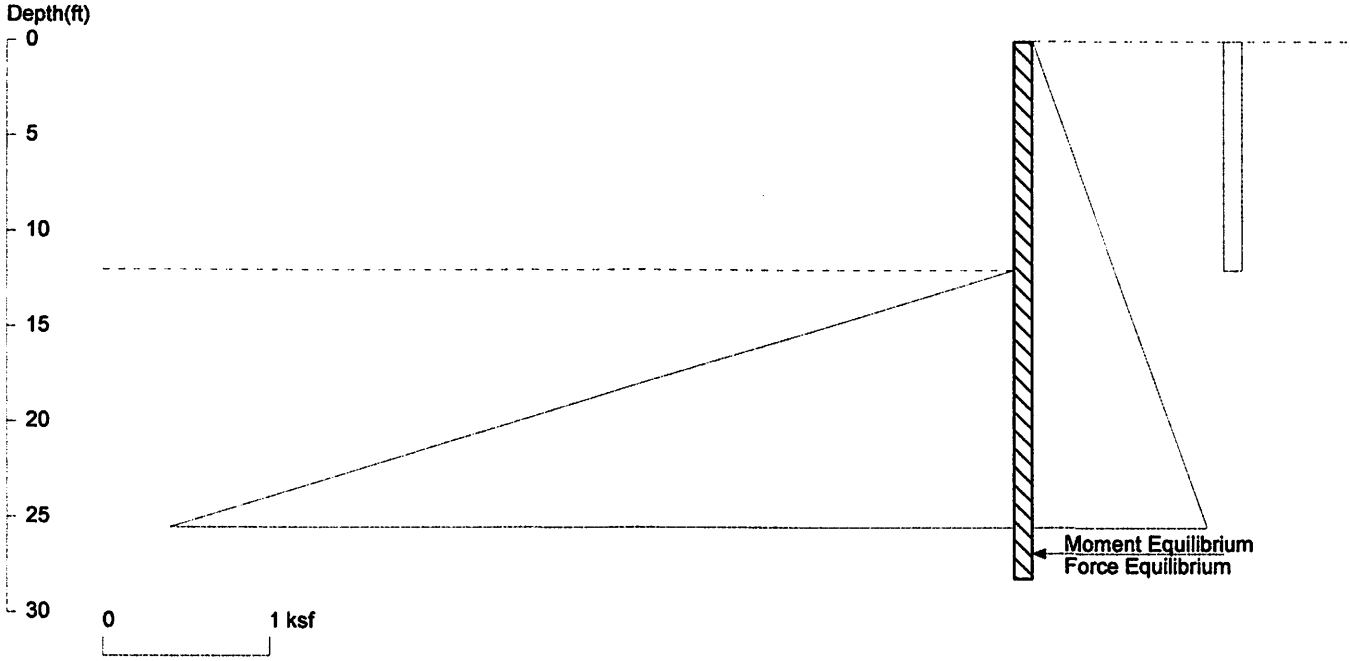

<ShoringSuite> CIVILTECH SOFTWARE USA www.civiltech.com

Licensed to 4324324234 3424343 Date: 8/12/2016

File: E:\Projects 2016\4634 Mercer Way Barcelo\4634 E Mercer structural\4_9 Soldier Pile Lower Wall w seismic load.sh8

Wall Height=12.0 Pile Diameter=2.5 Pile Spacing=8.0 Wall Type: 2. Soldier Pile, Drilled

Say 18 ft

PILE LENGTH: Min. Embedment=16.25 Min. Pile Length=28.25

MOMENT IN PILE: Max. Moment=325.88 per Pile Spacing=8.0 at Depth=18.95

PILE SELECTION:

Request Min. Section Modulus = 118.5 in3/pile=1941.89 cm3/pile, Fy= 50 ksi = 345 MPa, Fb/Fy=0.66

W16X67 has Section Modulus = 117.0 in3/pile=1917.28 cm3/pile. It is less than Min. Requirements!

1.3 % overstress still within the intent of the design for seismic load

DRIVING PRESSURES (ACTIVE, WATER, & SURCHARGE):

Z1	P1	Z2	P2	Slope
0	0	99	4.059	0.041
0	0.11	12	0.110	

PASSIVE PRESSURES:

Z1	P1	Z2	P2	Slope
12	0	99	32.62	0.375

ACTIVE SPACING:

No.	Z depth	Spacing
1	0.00	8.00
2	12.00	2.50

PASSIVE SPACING:

No.	Z depth	Spacing
1	12.00	5.00

UNITS: Width,Spacing,Diameter,Length,and Depth - ft; Force - kip; Moment - kip-ft
Friction,Bearing,and Pressure - ksf; Pres. Slope - kip/ft3; Deflection - in

Key No. 4.10 Upper Soldier Pile Wall, Section B, W16x31, Grade 50, Spacing 8 ft

Soil conditions for calculation per geotechnical report

	Equivalent Fluid weight at rest (sloped backfill)		48 pcf
	Fluid unit weight	passive	300 pcf
		Seismic	375 pcf
	Pile hole diameter		2.5 ft
Section B	Retained height of wall:	h	6 ft
	Uniform seismic load	8 x H	48 psf
	Soldier pile section		W16x31
	Soldier pile min embedment	8.5 ft, say	13 ft

Embedment chosen such that bottom of wall is deeper than the top of the lower wall

For calculation see attached design sheets

4634 Mercer Way
Key No. 4.10 Upper Wall Section B

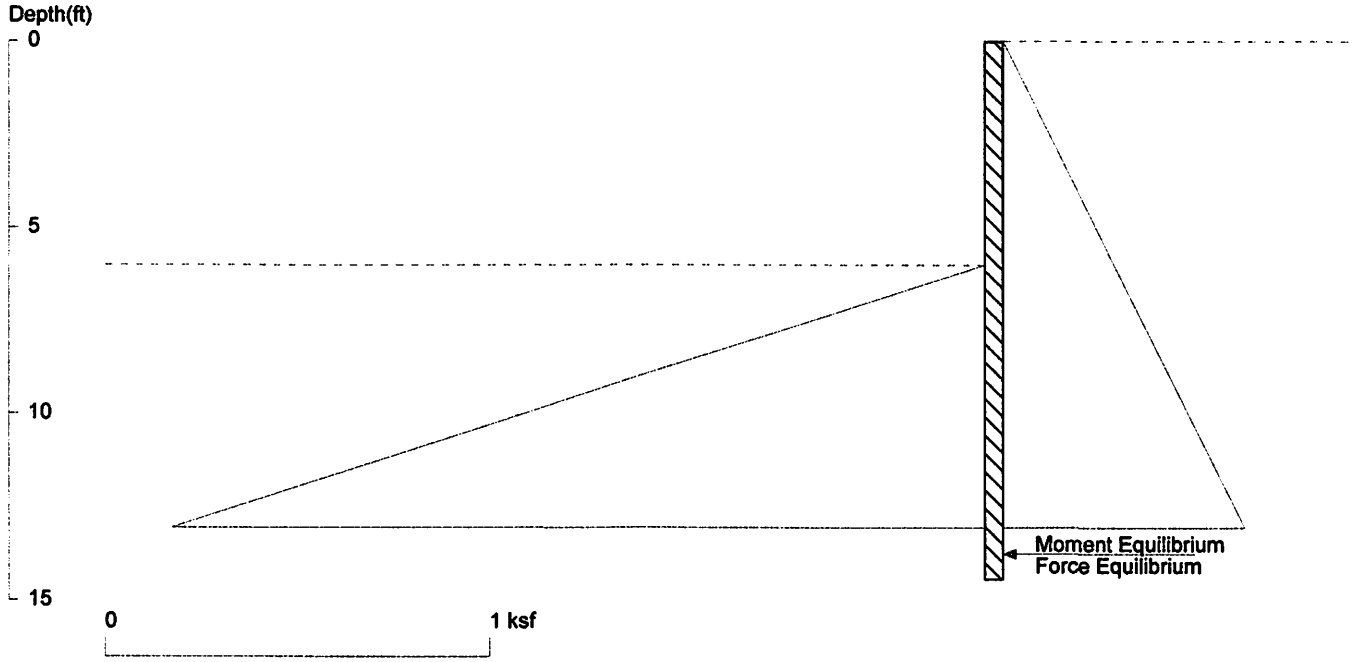

<ShoringSuite> CIVILTECH SOFTWARE USA www.civiltech.com

Licensed to 4324324234 3424343 Date: 8/10/2016

File: E:\Projects 2016\4634 Mercer Way Barcelo\4634 E Mercer structural\4_10 Soldier Pile Upper Wall Section B.sh8

Wall Height=6.0 Pile Diameter=2.5 Pile Spacing=8.0 Wall Type: 2. Soldier Pile, Drilled

PILE LENGTH: Min. Embedment=8.45 Sy 13 ft Min. Pile Length=14.45

MOMENT IN PILE: Max. Moment=32.68 per Pile Spacing=8.0 at Depth=9.72

PILE SELECTION:

Request Min. Section Modulus = 11.9 in3/pile=194.73 cm3/pile, Fy= 50 ksi = 345 MPa, Fb/Fy=0.66

W16X31 has Section Modulus = 47.2 in3/pile=773.47 cm3/pile. It is greater than Min. Requirements!

Top Deflection = 0.10(in) based on E (ksi)=29000.00 and I (in4)/pile=375.0

DRIVING PRESSURES (ACTIVE, WATER, & SURCHARGE):

Z1	P1	Z2	P2	Slope
0	0	99	4.752	0.04800

PASSIVE PRESSURES:

Z1	P1	Z2	P2	Slope
6	0	99	27.900	0.3

ACTIVE SPACING:

No.	Z depth	Spacing
1	0.00	8.00
2	6.00	2.50

PASSIVE SPACING:

No.	Z depth	Spacing
1	6.00	5.00

UNITS: Width,Spacing,Diameter,Length,and Depth - ft; Force - kip; Moment - kip-ft
Friction,Bearing,and Pressure - ksf; Pres. Slope - kip/ft3; Deflection - in

4634 Mercer Way

Key No. 4.10 Upper Wall Section B with seismic load

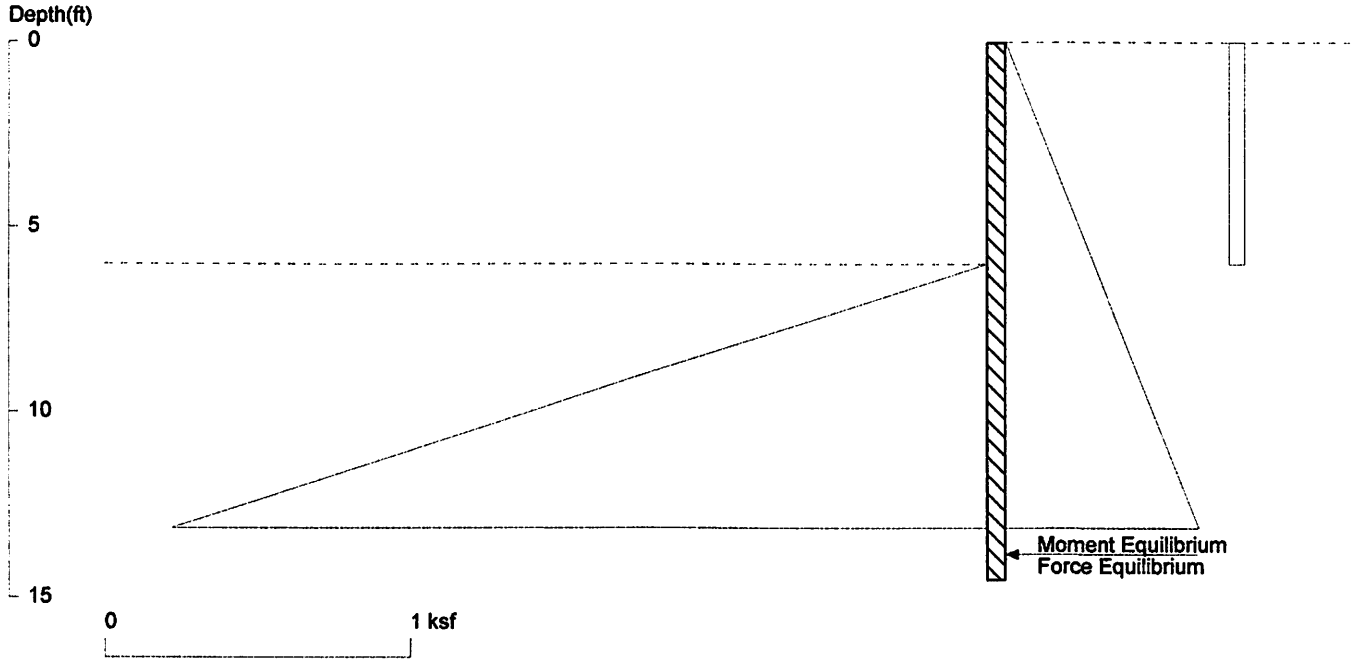

<ShoringSuite> CIVILTECH SOFTWARE USA www.civiltech.com

Licensed to 4324324234 3424343 Date: 8/10/2016

File: E:\Projects 2016\4634 Mercer Way Barcelo\4634 E Mercer structural\4_10 Soldier Pile Upper Wall Section B with sei

Wall Height=6.0 Pile Diameter=2.5 Pile Spacing=8.0 Wall Type: 2. Soldier Pile, Drilled

PILE LENGTH: Min. Embedment=8.54 Min. Pile Length=14.54
MOMENT IN PILE: Max. Moment=45.59 per Pile Spacing=8.0 at Depth=9.69

say 13 ft
chosen to be deeper
than top of lower wall

PILE SELECTION:
Request Min. Section Modulus = 16.6 in3/pile=271.67 cm3/pile, Fy= 50 ksi = 345 MPa, Fb/Fy=0.66
W16X31 has Section Modulus = 47.2 in3/pile=773.47 cm3/pile. It is greater than Min. Requirements!
Top Deflection = 0.14(in) based on E (ksi)=29000.00 and I (in4)/pile=375.0

DRIVING PRESSURES (ACTIVE, WATER, & SURCHARGE):

Z1	P1	Z2	P2	Slope
0	0	99	4.752	0.04800
0	0.05	6	0.050	

PASSIVE PRESSURES:

Z1	P1	Z2	P2	Slope
6	0	99	34.875	0.375

ACTIVE SPACING:

No.	Z depth	Spacing
1	0.00	8.00
2	6.00	2.50

PASSIVE SPACING:

No.	Z depth	Spacing
1	6.00	5.00

UNITS: Width,Spacing,Diameter,Length,and Depth - ft; Force - kip; Moment - kip-ft
Friction,Bearing,and Pressure - ksf; Pres. Slope - kip/ft3; Deflection - in

Key No. 4.11 Upper Soldier Pile Wall, Section C, W16x40, Grade 50, Spacing 8 ft

Soil conditions for calculation per geotechnical report

	Equivalent Fluid weight at rest (sloped backfill)		48 pcf
	Fluid unit weight	passive	300 pcf
		Seismic	375 pcf
	Pile hole diameter		2.5 ft
Section C	Retained height of wall:	h	9 ft
	Uniform seismic load	8 x H	72 psf
	Soldier pile section		W16x40
	Soldier pile min embedment	12.76 ft, say	14 ft

For calculation see attached design sheets

4634 Mercer Way
Key No. 4.11 Upper Wall Section C

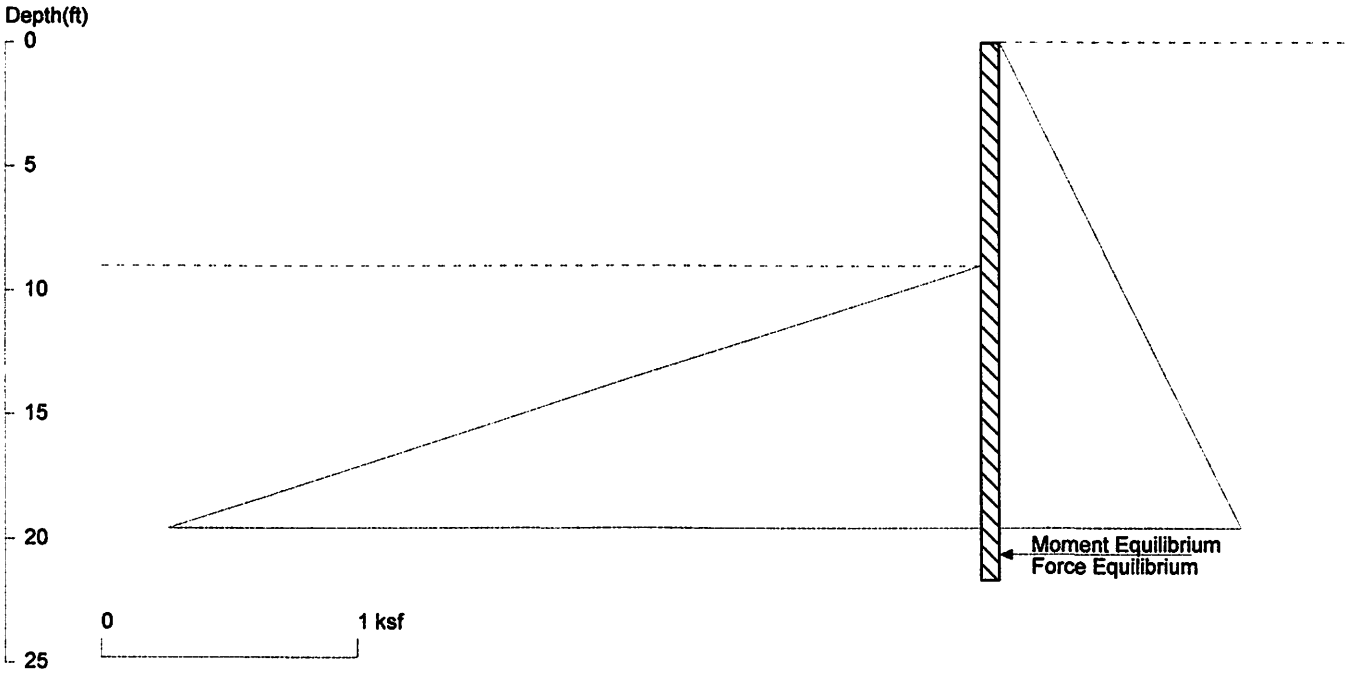

<ShoringSuite> CIVILTECH SOFTWARE USA www.civiltech.com

Licensed to 4324324234 3424343 Date: 8/10/2016

File: E:\Projects 2016\4634 Mercer Way Barcelo\4634 E Mercer structural\4_11 Soldier Pile Upper Wall Section C.sh8

Wall Height=9.0 Pile Diameter=2.5 Pile Spacing=8.0 Wall Type: 2. Soldier Pile, Drilled

say 14 ft

PILE LENGTH: Min. Embedment=12.68 Min. Pile Length=21.68

MOMENT IN PILE: Max. Moment=110.29 per Pile Spacing=8.0 at Depth=14.58

PILE SELECTION:

Request Min. Section Modulus = 40.1 in3/pile=657.21 cm3/pile, Fy= 50 ksi = 345 MPa, Fb/Fy=0.66

W16X40 has Section Modulus = 64.7 in3/pile=1060.24 cm3/pile. It is greater than Min. Requirements!

Top Deflection = 0.51(in) based on E (ksi)=29000.00 and I (in4)/pile=518.0

DRIVING PRESSURES (ACTIVE, WATER, & SURCHARGE):

Z1	P1	Z2	P2	Slope
0	0	99	4.752	0.04800

PASSIVE PRESSURES:

Z1	P1	Z2	P2	Slope
9	0	99	27.000	0.3

ACTIVE SPACING:

No.	Z depth	Spacing
1	0.00	8.00
2	9.00	2.50

PASSIVE SPACING:

No.	Z depth	Spacing
1	9.00	5.00

UNITS: Width,Spacing,Diameter,Length,and Depth - ft; Force - kip; Moment - kip-ft
Friction,Bearing,and Pressure - ksf; Pres. Slope - kip/ft3; Deflection - in

4634 Mercer Way

Key No. 4.11 Upper Wall Section C with seismic load

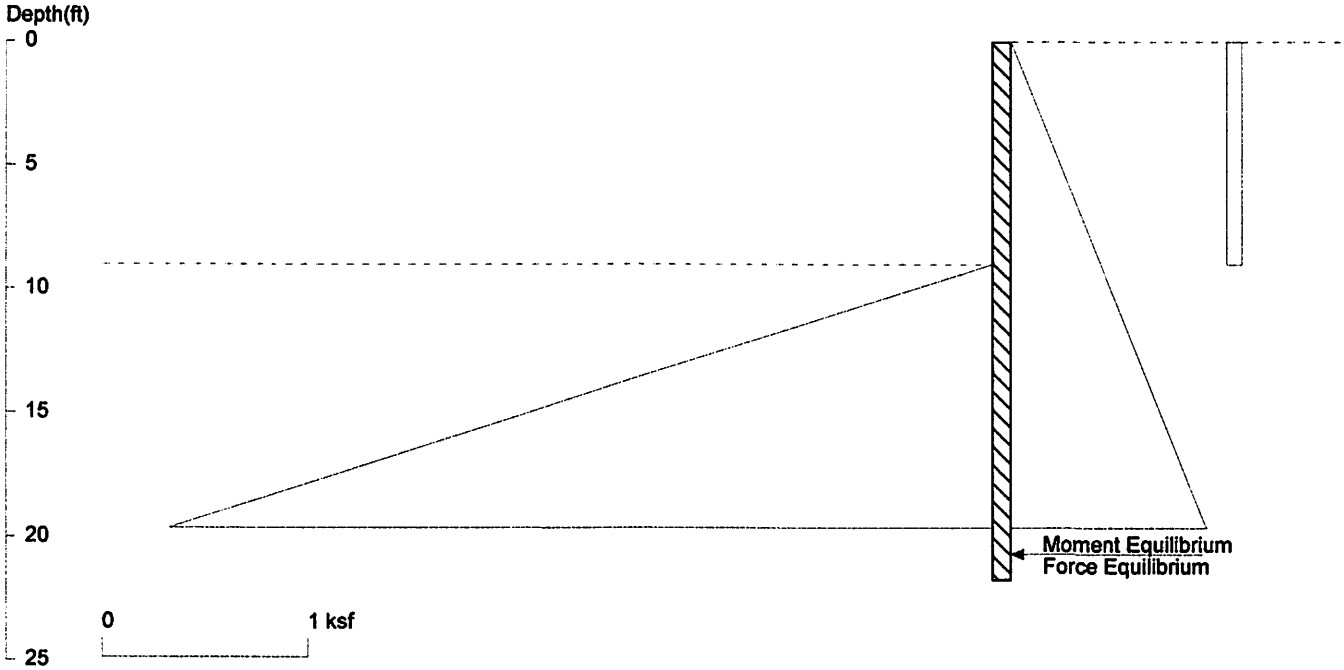

<ShoringSuite> CIVILTECH SOFTWARE USA www.civiltech.com

Licensed to 4324324234 3424343 Date: 8/10/2016

File: E:\Projects 2016\4634 Mercer Way Barcelo\4634 E Mercer structural\4_11 Soldier Pile Upper Wall Section C with sei

Wall Height=9.0 Pile Diameter=2.5 Pile Spacing=8.0 Wall Type: 2. Soldier Pile, Drilled

PILE LENGTH: Min. Embedment=12.76 Min. Pile Length=21.76 ≈ 14 ft

MOMENT IN PILE: Max. Moment=151.70 per Pile Spacing=8.0 at Depth=14.53

PILE SELECTION:

Request Min. Section Modulus = 55.2 in3/pile=903.98 cm3/pile, Fy= 50 ksi = 345 MPa, Fb/Fy=0.66

W16X40 has Section Modulus = 64.7 in3/pile=1060.24 cm3/pile. It is greater than Min. Requirements!

Top Deflection = 0.75(in) based on E (ksi)=29000.00 and I (in4)/pile=518.0

DRIVING PRESSURES (ACTIVE, WATER, & SURCHARGE):

Z1	P1	Z2	P2	Slope
0	0	99	4.752	0.04800
0	0.072	9	0.072	

PASSIVE PRESSURES:

Z1	P1	Z2	P2	Slope
9	0	99	33.750	0.375

ACTIVE SPACING:

No.	Z depth	Spacing
1	0.00	8.00
2	9.00	2.50

PASSIVE SPACING:

No.	Z depth	Spacing
1	9.00	5.00

UNITS: Width,Spacing,Diameter,Length,and Depth - ft; Force - kip; Moment - kip-ft
Friction,Bearing,and Pressure - ksf; Pres. Slope - kip/ft3; Deflection - in

Key No. 4.12 Upper Soldier Pile Wall, Section D, W16x89, Grade 50, Spacing 8 ft

Soil conditions for calculation per geotechnical report

	Equivalent Fluid weight at rest (sloped backfill)		48 pcf
	Fluid unit weight	passive	300 pcf
		Seismic	375 pcf
	Pile hole diameter		2.5 ft
Section D	Retained height of wall:	h	12.5 ft
	Uniform seismic load	8 x H	100 psf
	Soldier pile section		W16x89
	Soldier pile min embedment	17.72 ft, say	19 ft

For calculation see attached design sheets

4634 Mercer Way
Key No. 4.12 Upper Wall Section D

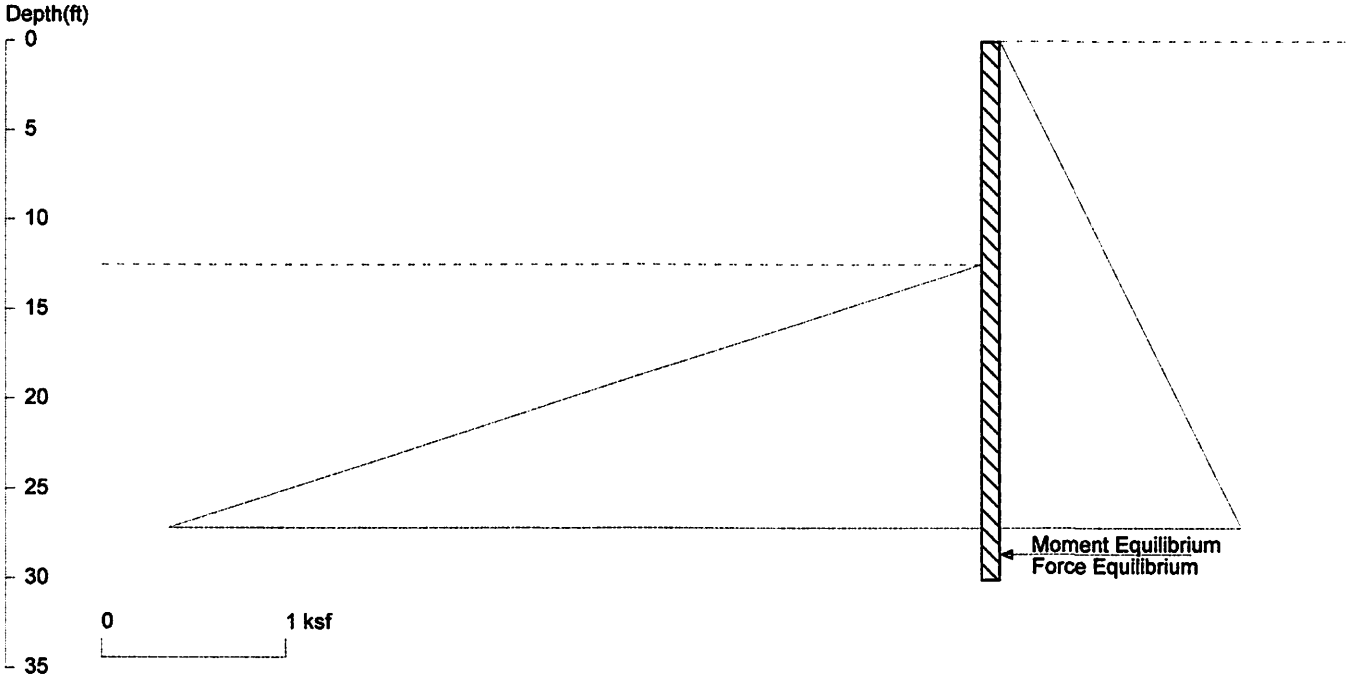

<ShoringSuite> CIVILTECH SOFTWARE USA www.civiltech.com

Licensed to 4324324234 3424343 Date: 8/10/2016

File: E:\Projects 2016\4634 Mercer Way Barcelo\4634 E Mercer structural\4_12 Soldier Pile Upper Wall Section D.sh8

Wall Height=12.5 Pile Diameter=2.5 Pile Spacing=8.0 Wall Type: 2. Soldier Pile, Drilled

PILE LENGTH: Min. Embedment=17.61 Min. Pile Length=30.11
MOMENT IN PILE: Max. Moment=295.49 per Pile Spacing=8.0 at Depth=20.26

PILE SELECTION:
Request Min. Section Modulus = 107.4 in3/pile=1760.78 cm3/pile, Fy= 50 ksi = 345 MPa, Fb/Fy=0.66
W16X89 has Section Modulus = 155.0 in3/pile=2539.99 cm3/pile. It is greater than Min. Requirements!
Top Deflection = 1.04(in) based on E (ksi)=29000.00 and I (in4)/pile=1300.0

DRIVING PRESSURES (ACTIVE, WATER, & SURCHARGE):

Z1	P1	Z2	P2	Slope
0	0	99	4.752	0.04800

PASSIVE PRESSURES:

Z1	P1	Z2	P2	Slope
12.5	0	99	25.950	0.3

ACTIVE SPACING:

No.	Z depth	Spacing
1	0.00	8.00
2	12.50	2.50

PASSIVE SPACING:

No.	Z depth	Spacing
1	12.50	5.00

UNITS: Width,Spacing,Diameter,Length,and Depth - ft; Force - kip; Moment - kip-ft
Friction,Bearing,and Pressure - ksf; Pres. Slope - kip/ft3; Deflection - in

4634 Mercer Way

Key No. 4.12 Upper Wall Section D with seismic load

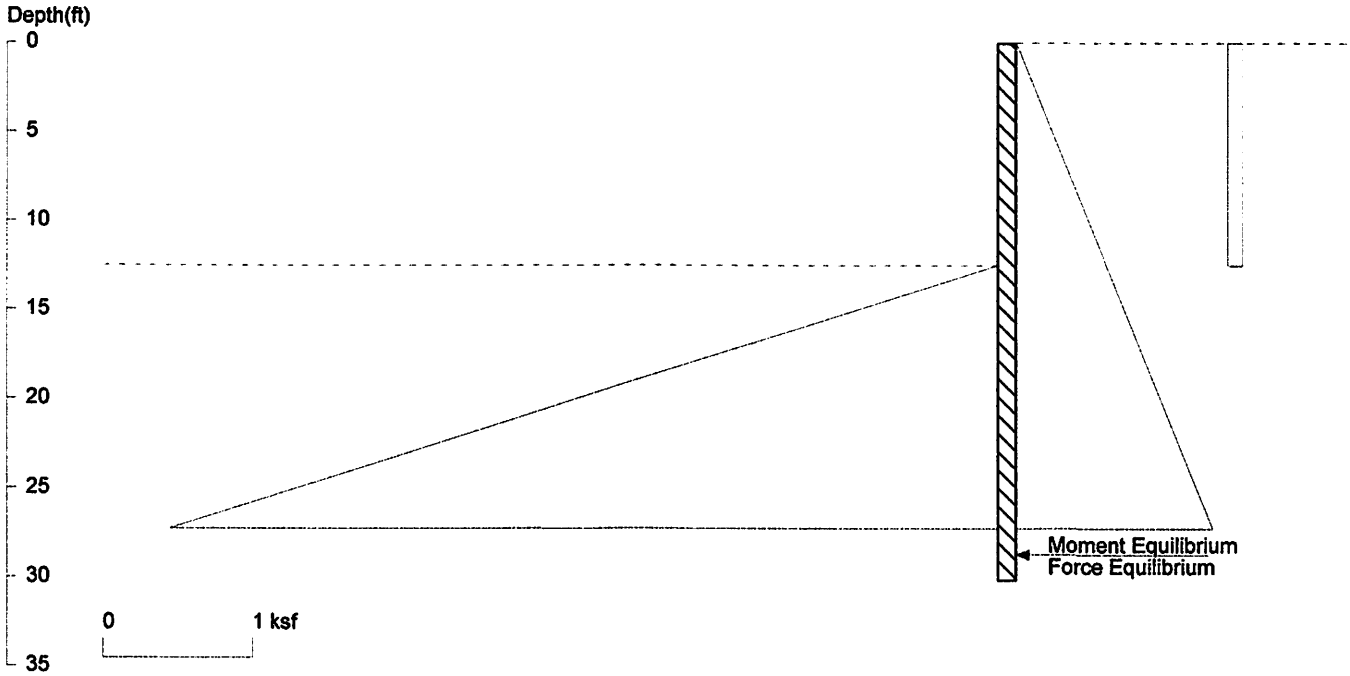

<ShoringSuite> CIVILTECH SOFTWARE USA www.civiltech.com

Licensed to 4324324234 3424343 Date: 8/10/2016

File: E:\Projects 2016\4634 Mercer Way Barcelo\4634 E Mercer structural\4_12 Soldier Pile Upper Wall Section D with sei

Wall Height=12.5 Pile Diameter=2.5 Pile Spacing=8.0 Wall Type: 2. Soldier Pile, Drilled

Say 19 ft

PILE LENGTH: Min. Embedment=17.72 Min. Pile Length=30.22

MOMENT IN PILE: Max. Moment=408.44 per Pile Spacing=8.0 at Depth=20.17

PILE SELECTION:

Request Min. Section Modulus = 147.8 in3/pile=2421.94 cm3/pile, Fy= 50 ksi = 345 MPa, Fb/Fy=0.66

W16X89 has Section Modulus = 155.0 in3/pile=2539.99 cm3/pile. It is greater than Min. Requirements!

Top Deflection = 1.53(in) based on E (ksi)=29000.00 and I (in4)/pile=1300.0

DRIVING PRESSURES (ACTIVE, WATER, & SURCHARGE):

Z1	P1	Z2	P2	Slope
0	0	99	4.752	0.04800
0	0.10	12.5	0.100	

PASSIVE PRESSURES:

Z1	P1	Z2	P2	Slope
12.5	0	99	32.438	0.375

ACTIVE SPACING:

No.	Z depth	Spacing
1	0.00	8.00
2	12.50	2.50

PASSIVE SPACING:

No.	Z depth	Spacing
1	12.50	5.00

UNITS: Width,Spacing,Diameter,Length,and Depth - ft; Force - kip; Moment - kip-ft
Friction,Bearing,and Pressure - ksf; Pres. Slope - kip/ft3; Deflection - in

Key No. 4.13 Soldier Pile Wall, Section E, W16x89, Grade 50, Spacing 8 ft

Soil conditions for calculation per geotechnical report

	Equivalent Fluid weight at rest (sloped backfill)		48 pcf
	Fluid unit weight	passive	300 pcf
		Seismic	375 pcf
	Pile hole diameter		2.5 ft
Section E	Retained height of wall:	h	12.5 ft
	Uniform seismic load	8 x H	100 psf
	For temporary condition (with 5 ft bench at passive side)		
	Passive pressure		300 pcf
	Soldier pile section		W16x89
	Soldier pile min embedment	20 ft, say	28 ft
	(embedment governed by temporary load condition)		

For calculation see attached design sheets

4634 Mercer Way

Key No. 4.13 Section E permanent w Bench

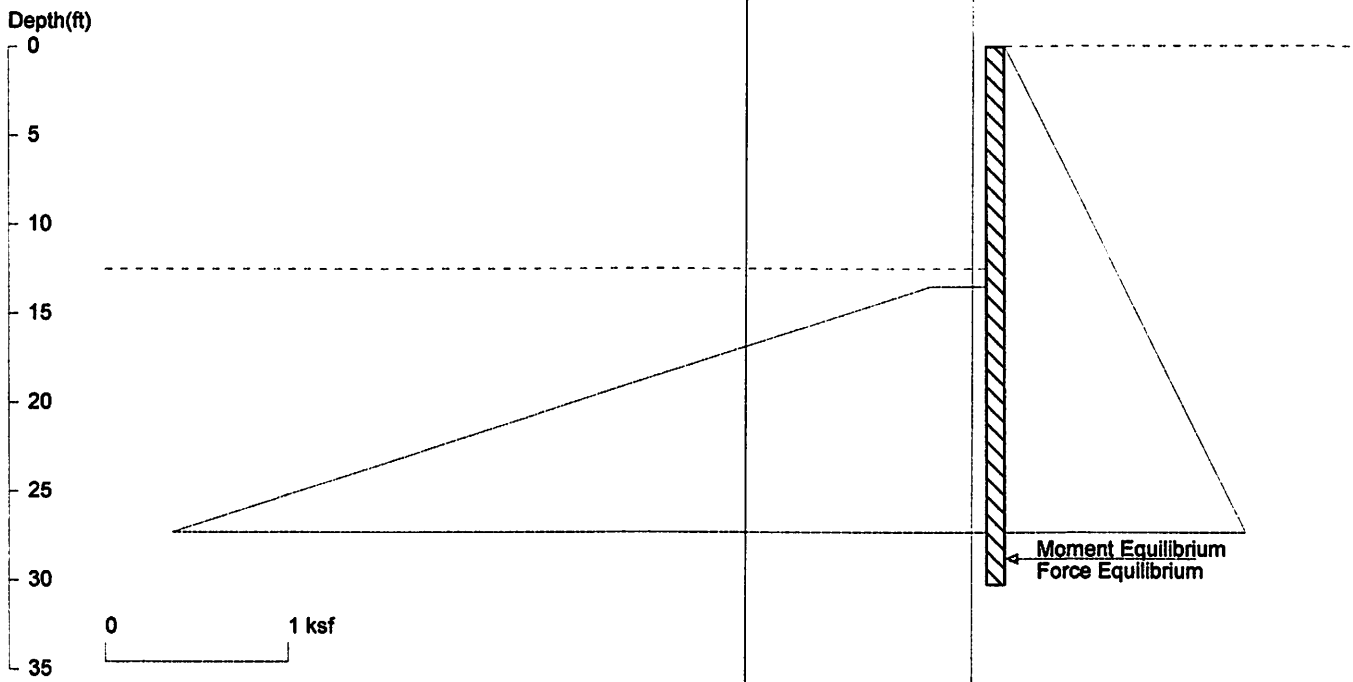

<ShoringSuite> CIVILTECH SOFTWARE USA www.civiltech.com

Licensed to 4324324234 3424343 Date: 5/23/2019

File: E:\Projects 2016\4634 Mercer Way Barcelo\4634 E Mercer structural\SP w Bench\4_13 Section E permanent w Benc

Wall Height=12.5 Pile Diameter=2.5 Pile Spacing=8.0 Wall Type: 2. Soldier Pile, Drilled

PILE LENGTH: Min. Embedment=17.74 Min. Pile Length=30.24
MOMENT IN PILE: Max. Moment=300.84 per Pile Spacing=8.0 at Depth=20.34

PILE SELECTION:
Request Min. Section Modulus = 109.4 in3/pile=1792.70 cm3/pile, Fy= 50 ksi = 345 MPa, Fb/Fy=0.66
W16X89 has Section Modulus = 155.0 in3/pile=2539.99 cm3/pile. It is greater than Min. Requirements!
Top Deflection = 1.06(in) based on E (ksi)=29000.00 and I (in4)/pile=1300.0

DRIVING PRESSURES (ACTIVE, WATER, & SURCHARGE):

Z1	P1	Z2	P2	Slope
0	0	99	4.752	0.048

PASSIVE PRESSURES:

Z1	P1	Z2	P2	Slope
13.5	0.3	99	25.95	0.3000

ACTIVE SPACING:

No.	Z depth	Spacing
1	0.00	8.00
2	12.50	2.50

PASSIVE SPACING:

No.	Z depth	Spacing
1	12.50	5.00

UNITS: Width,Spacing,Diameter,Length,and Depth - ft; Force - kip; Moment - kip-ft
Friction,Bearing,and Pressure - ksf; Pres. Slope - kip/ft3; Deflection - in

4634 Mercer Way

Key No. 4.13 Section E temporary w Bench

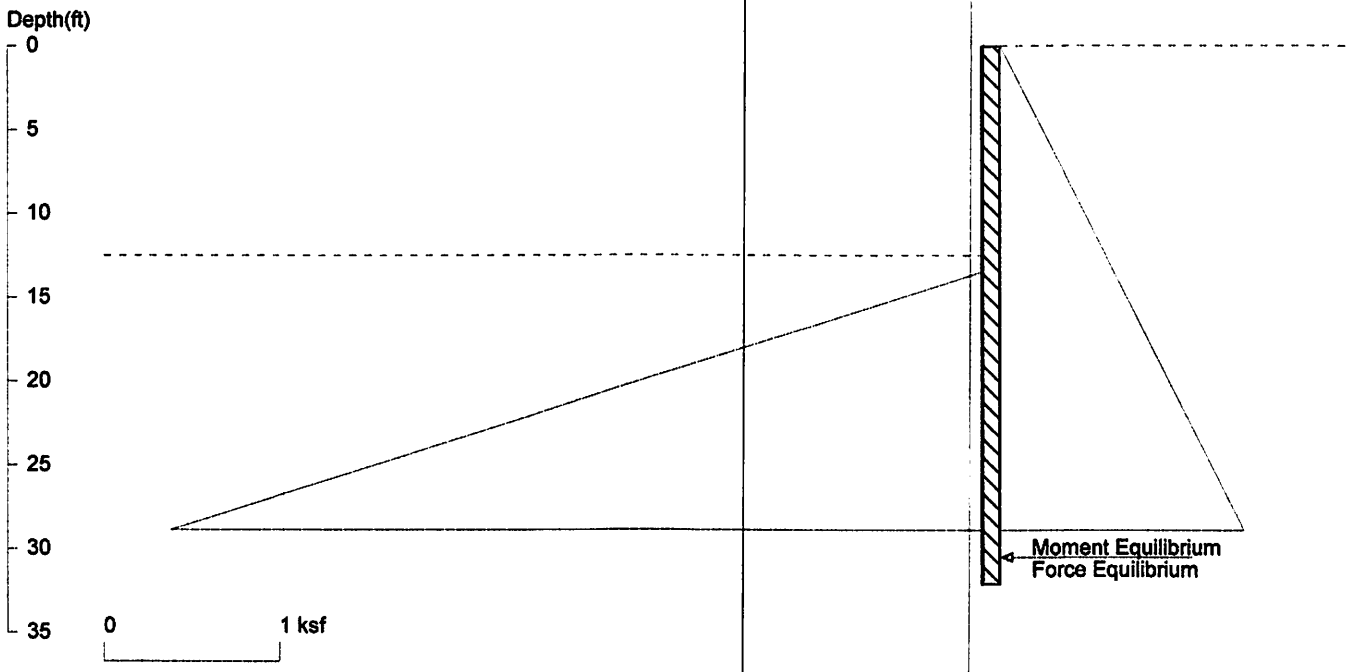

<ShoringSuite> CIVILTECH SOFTWARE USA www.civiltech.com

Licensed to 4324324234 3424343 Date: 5/23/2019

File: E:\Projects 2016\4634 Mercer Way Barcelo\4634 E Mercer structural\SP w Bench\4_13 Section E temporary w bencl

Wall Height=12.5 Pile Diameter=2.5 Pile Spacing=8.0 Wall Type: 2. Soldier Pile, Drilled

PILE LENGTH: Min. Embedment=19.61 Min. Pile Length=32.11
MOMENT IN PILE: Max. Moment=342.34 per Pile Spacing=8.0 at Depth=21.53

PILE SELECTION:
Request Min. Section Modulus = 124.5 in3/pile=2039.95 cm3/pile, Fy= 50 ksi = 345 MPa, Fb/Fy=0.66
W16X89 has Section Modulus = 155.0 in3/pile=2539.99 cm3/pile. It is greater than Min. Requirements!
Top Deflection = 1.23(in) based on E (ksi)=29000.00 and I (in4)/pile=1300.0

DRIVING PRESSURES (ACTIVE, WATER, & SURCHARGE):

Z1	P1	Z2	P2	Slope
0	0	99	4.752	0.048

PASSIVE PRESSURES:

Z1	P1	Z2	P2	Slope
13.5	0	99	25.650	0.3

ACTIVE SPACING:

No.	Z depth	Spacing
1	0.00	8.00
2	12.50	2.50

PASSIVE SPACING:

No.	Z depth	Spacing
1	12.50	5.00

UNITS: Width,Spacing,Diameter,Length,and Depth - ft; Force - kip; Moment - kip-ft
Friction,Bearing,and Pressure - ksf; Pres. Slope - kip/ft3; Deflection - in

4634 Mercer Way

Key No. 4.13 Section E with seismic load w Bench

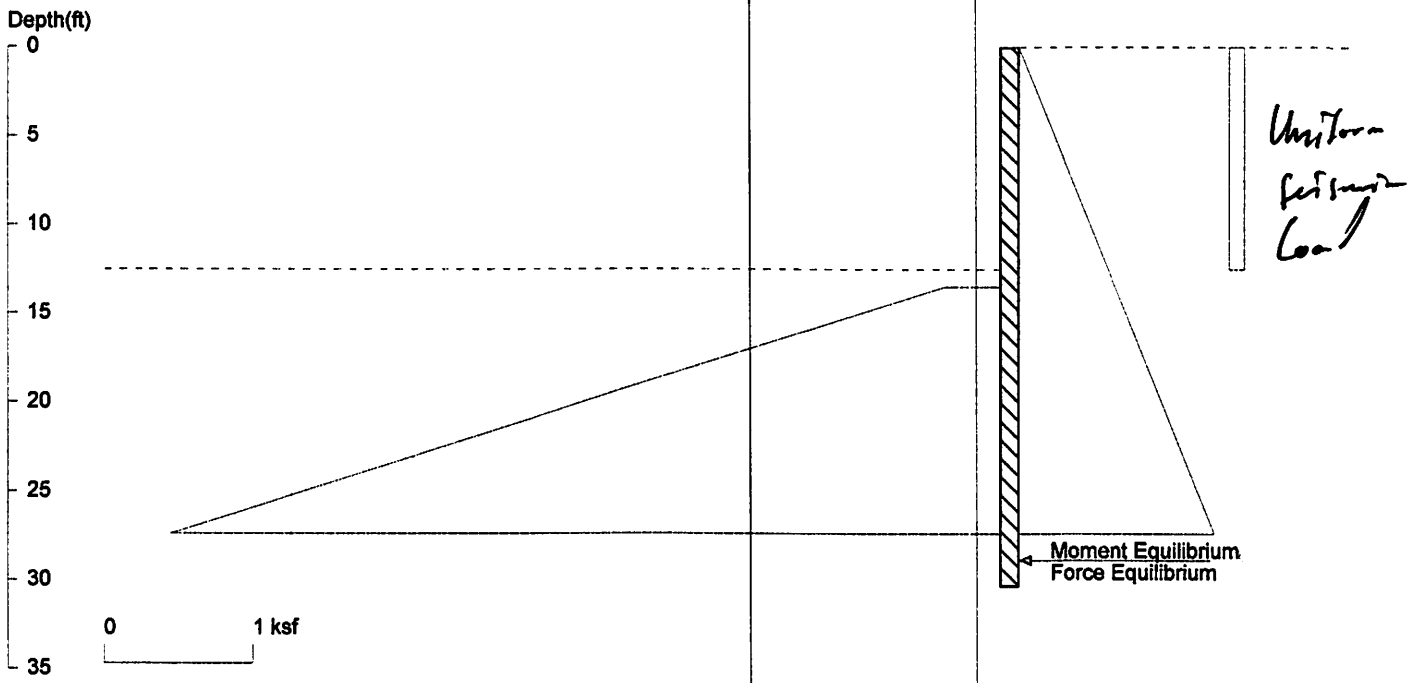

<ShoringSuite> CIVILTECH SOFTWARE USA www.civiltech.com

Licensed to 4324324234 3424343 Date: 5/23/2019

File: E:\Projects 2016\4634 Mercer Way Barcelo\4634 E Mercer structural\SP w Bench\4_13 Section E w seismic load w E

Wall Height=12.5 Pile Diameter=2.5 Pile Spacing=8.0 Wall Type: 2. Soldier Pile, Drilled

PILE LENGTH: Min. Embedment=17.84 Min. Pile Length=30.34
MOMENT IN PILE: Max. Moment=413.06 per Pile Spacing=8.0 at Depth=20.25

PILE SELECTION:
Request Min. Section Modulus = 150.2 in3/pile=2461.38 cm3/pile, Fy= 50 ksi = 345 MPa, Fb/Fy=0.66
W16X89 has Section Modulus = 155.0 in3/pile=2539.99 cm3/pile. It is greater than Min. Requirements!
Top Deflection = 1.55(in) based on E (ksi)=29000.00 and I (in4)/pile=1300.0

DRIVING PRESSURES (ACTIVE, WATER, & SURCHARGE):

Z1	P1	Z2	P2	Slope
0	0	99	4.752	0.048
0	0.1	12.5	0.100	

uniform seismic load

PASSIVE PRESSURES:

Z1	P1	Z2	P2	Slope
13.5	0.375	99	32.43	0.3749

ACTIVE SPACING:

No.	Z depth	Spacing
1	0.00	8.00
2	12.50	2.50

PASSIVE SPACING:

No.	Z depth	Spacing
1	12.50	5.00

UNITS: Width,Spacing,Diameter,Length,and Depth - ft; Force - kip; Moment - kip-ft
Friction,Bearing,and Pressure - ksf; Pres. Slope - kip/ft3; Deflection - in