SEC. 18, TWN. 24N, RGE. 5E, W.M.

COVER SHEET

GENERAL NOTES

1. A PRE-CONSTRUCTION CONFERENCE SHALL BE HELD PRIOR TO THE START OF CONSTRUCTION. THE CONTRACTOR SHALL BE RESPONSIBLE FOR SECURING ALL NECESSARY PERMITS PRIOR TO CONSTRUCTION.
2. SPECIAL INSPECTIONS BY CITY INSPECTOR ARE REQUIRED DURING CONSTRUCTION. GENERAL CONTRACTOR TO COORDINATE.
3. ALL ROADWAY WORK AND MATERIAL SHALL BE IN ACCORDANCE WITH THE CURRENT APWA AND CITY OF MERCER ISLAND STANDARDS AND SPECIFICATIONS.
4. A COPY OF THE APPROVED CONSTRUCTION PLANS MUST BE ON THE JOB SITE WHENEVER CONSTRUCTION IS IN PROGRESS.
5. ALL TRENCH BACKFILL SHALL BE COMPACTED TO 95 PERCENT DENSITY IN ROADWAYS, ROADWAY SHOULDERS, ROADWAY PRISM AND DRIVEWAYS, AND 85 PERCENT DENSITY IN UNPAVED AREAS. ALL PIPE ZONE COMPACTION SHALL BE 95 PERCENT..
6. IT IS THE RESPONSIBILITY OF THE CONTRACTOR TO PROVIDE ADEQUATE TEMPORARY TRAFFIC CONTROL TO ENSURE TRAFFIC SAFETY DURING CONSTRUCTION ACTIVITIES. ALL TRAFFIC CONTROL DEVICES SHALL CONFORM TO THE "MANUAL ON UNIFORM TRAFFIC CONTROL DEVICES" (MUTCD).
7. MEASURES SHALL BE TAKEN BY THE DEVELOPER TO PROVIDE GROUND COVER IN AREAS WITHIN THE RIGHT-OF-WAY WHICH HAVE BEEN STRIPPED OF NATURAL VEGETATION OR HAVE A POTENTIAL FOR EROSION.
8. ANY EXISTING PUBLIC IMPROVEMENTS DAMAGED DURING CONSTRUCTION SHALL BE REPLACED PRIOR TO FINAL INSPECTION.
9. THE CONTRACTOR IS RESPONSIBLE FOR KEEPING ALL PUBLIC STREETS FREE FROM MUD AND DEBRIS AT ALL TIMES.
10. ALL EXISTING ON-SITE STRUCTURES AND ASSOCIATED UTILITIES TO BE DEMOLISHED, REMOVED, AND/OR ABANDONED PER APPLICABLE JURISDICTIONAL REQUIREMENTS.
11. DEFICIENCIES, WHETHER CAUSED BY CONTRACTOR OPERATIONS OR NOT CAUSED BY THE CONTRACTOR'S OPERATIONS, SHALL BE REPAIRED IMMEDIATELY.
12. THE CONTRACTOR SHALL MAINTAIN ROADS AND STREETS ADJACENT TO THE PROJECT LIMITS WHEN AFFECTED BY THE CONTRACTOR'S OPERATIONS. THE CONTRACTOR SHALL REMOVE OR REPAIR ANY CONDITION RESULTING FROM THE WORK THAT MIGHT IMPEDE TRAFFIC OR CREATE A HAZARD. PUBLIC ROADWAYS SHALL BE BROOMED CLEAN AT THE END OF EACH WORK DAY.
13. THE CONTRACTOR SHALL BE RESPONSIBLE FOR PROVIDING ADEQUATE SAFEGUARDS, SAFETY DEVICES, PROTECTIVE EQUIPMENT, AND ANY OTHER NEEDED ACTIONS TO PROTECT THE LIFE, HEALTH, AND SAFETY OF THE PUBLIC, AND TO PROTECT PROPERTY IN CONNECTION WITH THE PERFORMANCE OF THE WORK COVERED BY THE CONTRACT.
14. ROCKERIES AND/OR RETAINING WALLS TO BE CONSTRUCTED PER GEOTECHNICAL AND/OR STRUCTURAL ENGINEER'S PLANS & SPECIFICATIONS.

GRAPHIC SCALE

20 0 10 20

SCALE: 1" = 20'

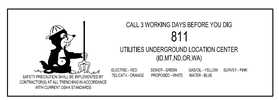

PROJECT DATA

PROPERTY ADDRESS:	4634 EAST MERCER WAY MERCER ISLAND, WASHINGTON 98040
TAX LOT NUMBER:	755870-0008
SITE AREA:	21,350 SF (0.49 ACRES)
ZONING	R-15 = RESIDENTIAL 15

LEGEND

- FOUND PIPE
- SET HUB
- SET PK NAIL
- FOUND NAIL
- GAS METER
- GAS VALVE
- SOIL LOG/TEST PIT
- SANITARY SEWER MANHOLE
- CATCH BASIN
- WATER METER
- WETLAND FLAG
- POWER METER
- AREA LIGHT
- POWER POLE
- SS — SANITARY SEWER LINE
- SD — STORM DRAIN LINE
- OHP — OVERHEAD POWER LINE
- CONCRETE PAVING
- ASPHALT PAVING
- BUILDINGS
- GRAVEL SURFACE

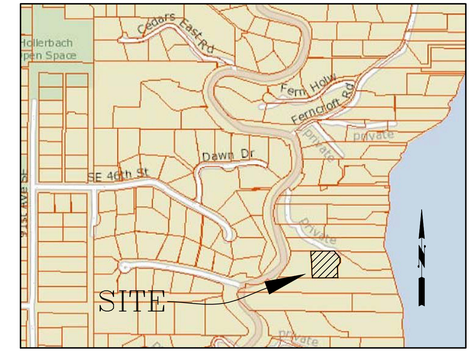

VICINITY MAP
NOT TO SCALE

PROJECT TEAM

OWNER/ DEVELOPER	BARCELO HOMES PO BOX 1733 AUBURN, WA 98071 CONTACT: BOGDAN MAKSIMCHUK PHONE: (206) 724-1072
ARCHITECT:	STUDIO 19 ARCHITECTS 207 1/2 1ST AVENUE SOUTH SEATTLE, WASHINGTON 98104 CONTACT: ANDREW WISDOM PHONE: (206) 466-1225
CIVIL ENGINEER:	LITCHFIELD ENGINEERING 12840 81ST AVE NE KIRKLAND, WA 98034 (425) 821-5038 CONTACT: KEITH LITCHFIELD, PE
GEOTECHNICAL ENGINEER:	PANGEO, INC 3213 EASTLAKE AVENUE E, STE. B SEATTLE, WA 98102 CONTACT: MICHAEL H. XUE, PE (206) 262-0374
SURVEYOR:	APS SURVEYING AND MAPPING 13221 SE 26TH STREET, SUITE A BELLEVUE, WASHINGTON 98005 CONTACT: TYLER SWEET, PLS PHONE: (425) 746-3342
CRITICAL AREA CONSULTANT:	WETLAND RESOURCES 9515 19TH AVE SE #106 EVERETT, WA 98208 CONTACT: NIELS PEDERSON, SENIOR ECOLOGIST PHONE: (425) 337-3174

LEGAL DESCRIPTION

SANDY BEACH TRS UNREC LOT B
CITY OF MERCER ISLAND SHORT
PLAT 76-12-036 REC #7701060821
SD SP DAF – LOTS 1-2 & 3;

DATUM

NAVD88
BENCHMARK: POINT NAME: 4135: 1/4" BRASS PIN IN CONC. (DOWN 1.0') INTX. E. MERCER WAY & SE 68th ST,
ELEVATION: 158.465

SHEET INDEX

1. COVER SHEET
2. TESC PLAN
3. SITE IMPROVEMENT PLAN
4. CONSTRUCTION DETAILS
5. TEMPORARY EXCAVATION PLAN
6. STORM DRAIN OUTFALL PROFILE

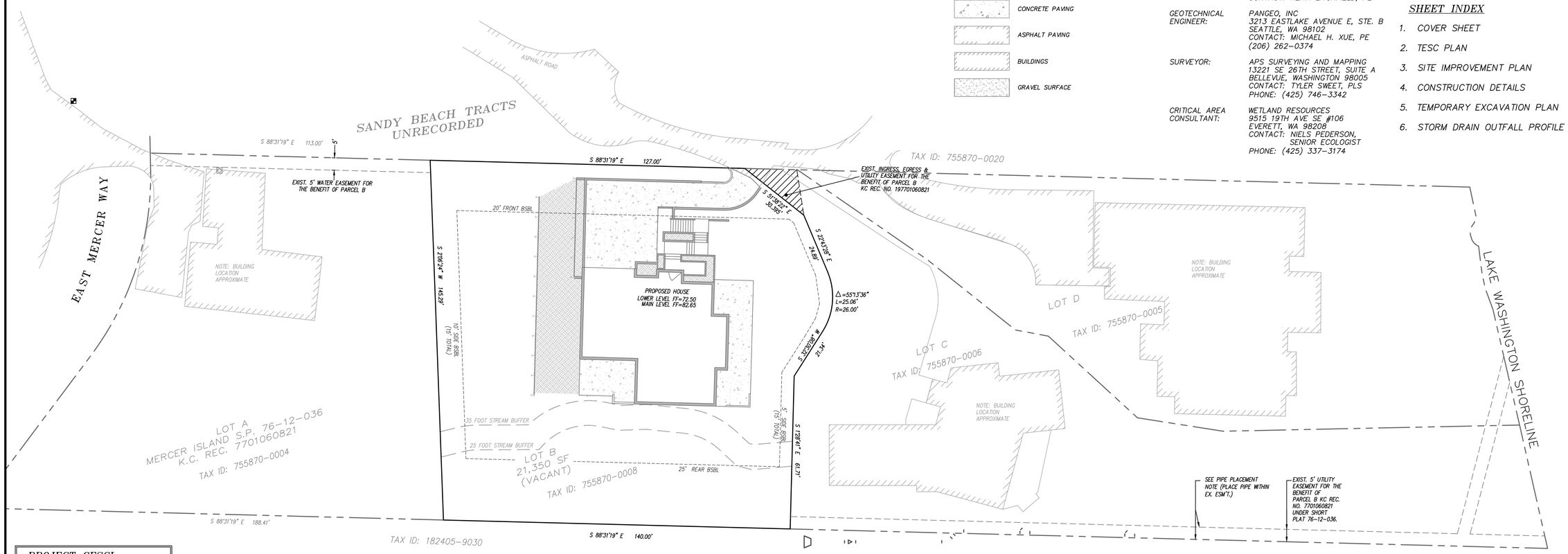

PROJECT CESCL

MICHAEL H. XUE, PE, CESCL
PANGEO, INC.
(206) 262-0374 (O)
(206) 491-0081 (C)

APPROVED: _____ CITY OF MERCER ISLAND DEVELOPMENT SERVICES GROUP Date _____

DWN BY	CHKD BY	DATE	NOTES
KAL	KAL	6-16-15	SUBMITTED TO CLIENT
KAL	KAL	7-6-15	REVISED PER CITY COMMENTS
KAL	KAL	10-19-15	REVISED PER CITY COMMENTS
KAL	KAL	3-25-16	ADD EXCAVATION PLAN: SHEET 5
KAL	KAL	5-25-16	ADD PROFILE: SHEET 6
KAL	KAL	6-14-17	UPDATED PER STREAM BUFFER
KAL	KAL	8-3-18	PER CITY COMMENTS
KAL	KAL	1-22-19	PER CITY COMMENTS

STAMP NOT VALID UNLESS SIGNED AND DATED

LITCHFIELD ENGINEERING
12840 81ST AVENUE NE
Kirkland, WA 98034
Tel (425) 821-5038 Fax (425) 821-5739

Copyright © 2000 Litchfield Engineering, Inc. All rights reserved.

COVER SHEET
BARCELLO HOMES S.F.R.
4634 EAST MERCER WAY
BOGDAN MAKSIMCHUK
P.O. BOX 1733
AUBURN, WA. 98071

JOB No.

CONSTRUCTION SEQUENCE:

1. ATTEND PRE-CONSTRUCTION MEETING
2. FLAG CLEARING LIMITS
3. INSTALL ORANGE TREE BARRIER FENCING
4. INSPECTION BY CITY OF MERCER ISLAND INSPECTOR
5. EROSION CONTROL DEVICES AND RESOURCES TO COVER ALL SOIL, IN CASE OF EROSION RISK, ARE TO BE ON THE SITE AT ALL TIMES
6. INSTALL 2 ROWS OF SILT FENCING ALONG THE EDGE OF CLEARING LIMITS
7. INSTALL FILTER SOCKS ON ALL DOWN GRADIENT STORM DRAIN INLETS.
8. CONSTRUCT TEMPORARY GRAVEL CONSTRUCTION ENTRANCE
9. CLEAR AND GRUB WITHIN CLEARING LIMITS
10. PERFORM SITE GRADING
11. KEEP PRIVATE ACCESS DRIVE FREE OF DIRT AND DEBRIS AT ALL TIMES.
12. CONSTRUCT BUILDING FOUNDATIONS, FOOTING DRAINS, AND WALL BACK DRAINS
13. CONSTRUCT DRAINAGE TIGHT LINE TO THE LAKE (PROPERTY OWNER OF LOT C TO BE PRESENT)
14. BACKFILL FOUNDATIONS AND RETAINING WALLS WITH DRAIN ROCK OR OTHER POROUS MATERIAL APPROVED BY PROJECT GEOTECH.
15. FINISH GRADE
16. APPLY PERMANENT VEGETATION AND MULCH ALL DISTURBED AREAS
17. CLEAN-UP THE SITE. TEMPORARY EROSION CONTROL DEVICES MAY BE REMOVED WITHIN 30 DAYS AFTER FINAL SITE STABILIZATION OR AFTER THEY ARE NO LONGER NECESSARY. PROJECT CESCL TO INSPECT SITE AND APPROVE REMOVAL OF TEMPORARY EROSION CONTROL MEASURES.

GRAPHIC SCALE
20 0 10 20
SCALE: 1" = 20'

EROSION/SEDIMENT CONTROL NOTES

1. PRIOR TO BEGINNING EARTH DISTURBING ACTIVITIES, INCLUDING CLEARING AND GRADING, ALL CLEARING LIMITS, EASEMENTS, SETBACKS, TREES AND DRAINAGE COURSES SHALL BE CLEARLY DEFINED AND MARKED IN THE FIELD TO PREVENT DAMAGE AND OFFSITE IMPACTS.
2. CONSTRUCTION VEHICLE ACCESS AND EXIT SHALL BE LIMITED TO ONE ROUTE IF POSSIBLE. ACCESS POINTS SHALL BE STABILIZED WITH QUARRY SPALLS OR CRUSHED ROCK TO MINIMIZE THE TRACKING OF SEDIMENTS ONTO PUBLIC STREETS. WHEEL WASH OR TIRE BATHS SHALL BE LOCATED ON-SITE. IF SEDIMENT IS TRANSPORTED ONTO A ROAD SURFACE, THE PAVEMENT SHALL BE CLEANED THOROUGHLY AT THE END OF EACH DAY. SEDIMENT SHALL BE REMOVED FROM THE PAVEMENT BY SHOVELING OR SWEEPING AND BE TRANSPORTED TO A CONTROLLED SEDIMENT DISPOSAL AREA. STREET WASHING WILL ONLY BE ALLOWED AFTER SEDIMENT IS REMOVED IN THIS MANNER. PAVEMENT WASHING SHALL NOT OCCUR UNTIL ALL STORM DRAIN INLETS, LOCATED DOWNSTREAM OF THE WASHING AREA, HAVE BEEN PROTECTED BY PLACEMENT OF A FILTER CLOTH UNDER THE INLET GRATE.
3. PROPERTIES AND WATERWAYS DOWNSTREAM FROM THE DEVELOPMENT SITE SHALL BE PROTECTED FROM EROSION DUE TO INCREASES IN THE VOLUME, VELOCITY, AND PEAK FLOW RATE OF STORMWATER RUNOFF FROM THE PROJECT SITE.
4. PRIOR TO LEAVING THE SITE, STORMWATER RUNOFF SHALL PASS THROUGH APPROVED SEDIMENT BARRIERS OR FILTERS, DIKES, OR ANY OTHER APPROVED FACILITY INTENDED TO TRAP SEDIMENT. THESE SEDIMENT CONTROLLING MEASURES SHALL BE CONSTRUCTED AS THE FIRST STEP IN GRADING. THESE FACILITIES SHALL BE FUNCTIONAL BEFORE ANY OTHER LAND DISTURBING ACTIVITY TAKES PLACE. EARTHEN STRUCTURES SUCH AS DAMS, DIKES, AND DIVERSIONS SHALL BE SEEDED AND MULCHED ACCORDING TO THE TIMING INDICATED UNDER ITEM 5.
5. ALL EXPOSED AND UNWORKED SOILS SHALL BE STABILIZED BY THE PLACEMENT OF SOD OR OTHER VEGETATION, PLASTIC COVERING, MULCHING, APPLICATION OF BASE ROCK WITHIN AREAS TO BE PAVED, OR SOME OTHER APPROVED MEANS, TO PROTECT THE SOIL FROM THE EROSIVE FORCES OF RAINDROP IMPACT AND FLOWING WATER. FROM OCTOBER 1 THROUGH APRIL 30, NO SOILS SHALL REMAIN EXPOSED AND UNWORKED FOR MORE THAN 2 DAYS. FROM MAY 1 THROUGH SEPTEMBER 30, NO SOIL SHALL REMAIN EXPOSED AND UNWORKED FOR MORE THAN 7 DAYS. THIS CONDITION APPLIES TO ALL SOILS ON SITE, WHETHER AT FINAL GRADE OR NOT. THE SOIL STABILIZATION MEASURES SELECTED SHOULD BE APPROPRIATE FOR THE TIME OF YEAR, SITE CONDITIONS, ESTIMATED DURATION OF USE, AND THE POTENTIAL WATER QUALITY IMPACTS THAT THE STABILIZATION MEASURES MAY HAVE ON THE DOWNSTREAM WATERS. SOIL STOCKPILES SHALL BE STABILIZED AND PROTECTED WITH SEDIMENT TRAPPING MEASURES.
6. CUT AND FILL SLOPES SHALL BE DESIGNED AND CONSTRUCTED IN A MANNER THAT WILL MINIMIZE EROSION. CONSIDER SOIL TYPE AND ITS POTENTIAL FOR EROSION. REDUCE SLOPE RUNOFF VELOCITIES BY (1) REDUCING THE LENGTH OF CONTINUOUS SLOPES BY USING TERRACING AND DIVERSIONS, (2) REDUCING THE GRADE OF THE SLOPE, AND (3) ROUGHEN SLOPE SURFACE. CONTAIN DOWNSLOPE COLLECTED WATER IN PIPES OR PROTECTED CHANNELS.
7. ALL STORM DRAIN INLETS MADE OPERABLE DURING CONSTRUCTION SHALL BE PROTECTED SO THAT STORMWATER RUNOFF SHALL NOT ENTER THE CONVEYANCE SYSTEM WITHOUT FIRST BEING FILTERED OR TREATED TO REMOVE SEDIMENTS.
8. ALL TEMPORARY ON-SITE CONVEYANCE CHANNELS SHALL BE DESIGNED, CONSTRUCTED AND STABILIZED TO PREVENT EROSION. STABILIZATION, INCLUDING ARMORING MATERIAL, ADEQUATE TO PREVENT EROSION AT ALL DISCHARGE POINTS, ADJACENT STREAM BANKS, SLOPES AND DOWNSTREAM REACHES, SHALL BE PROVIDED.
9. ALL POLLUTANTS, INCLUDING WASTE MATERIALS AND DEMOLITION DEBRIS, THAT OCCUR ON-SITE DURING CONSTRUCTION SHALL BE HANDLED AND DISPOSED OF IN A MANNER THAT DOES NOT CAUSE CONTAMINATION OF STORMWATER. MAINTENANCE AND REPAIR OF HEAVY EQUIPMENT AND VEHICLES INVOLVING OIL CHANGES, HYDRAULIC SYSTEM DRAIN DOWN, SOLVENT AND DE-GREASING CLEANING OPERATIONS AND OTHER ACTIVITIES WHICH MAY RESULT IN DISCHARGE OR SPILLAGE OF POLLUTANTS TO THE GROUND OR INTO STORMWATER RUNOFF, MUST BE CONDUCTED UNDER COVER AND ON IMPERVIOUS SURFACES. THESE SURFACES SHALL BE CLEANED IMMEDIATELY FOLLOWING ANY DISCHARGE OR SPILLAGE INCIDENT. WHEEL WASH, OR TIRE BATH WASTEWATER, SHALL NOT BE DISCHARGED TO THE STORM DRAIN, OR ON-SITE STORMWATER TREATMENT SYSTEM.
10. ALL TEMPORARY AND PERMANENT EROSION AND SEDIMENT CONTROL FACILITIES SHALL BE MAINTAINED AND REPAIRED AS NEEDED TO ASSURE CONTINUED PERFORMANCE OF THEIR INTENDED FUNCTION.

PRIVATE ROAD TO BE MAINTAINED FREE OF MUD AND DEBRIS. POWER BROOM DAILY AND/OR WHEN NECESSARY. THE USE OF WATER TO CLEAN ROADWAY IS STRICTLY PROHIBITED.

NOTE: ALL STORM DRAIN CATCH BASINS OR AREA DRAINS THAT EXIST DOWN GRADIENT OF THE SITE AND/OR ACCESS ROAD TO BE PROTECTED WITH FILTER SOCKS. THE SOCKS SHALL BE PERIODICALLY INSPECTED BY THE PROJECT CESCL TO INSURE THE SOCKS ARE CLEAN AND FREE OF SEDIMENT. PENDING WEATHER CONDITIONS DURING EARTHWORK, FREQUENT REPLACEMENT OF THE FILTER SOCKS MAY BE NECESSARY.

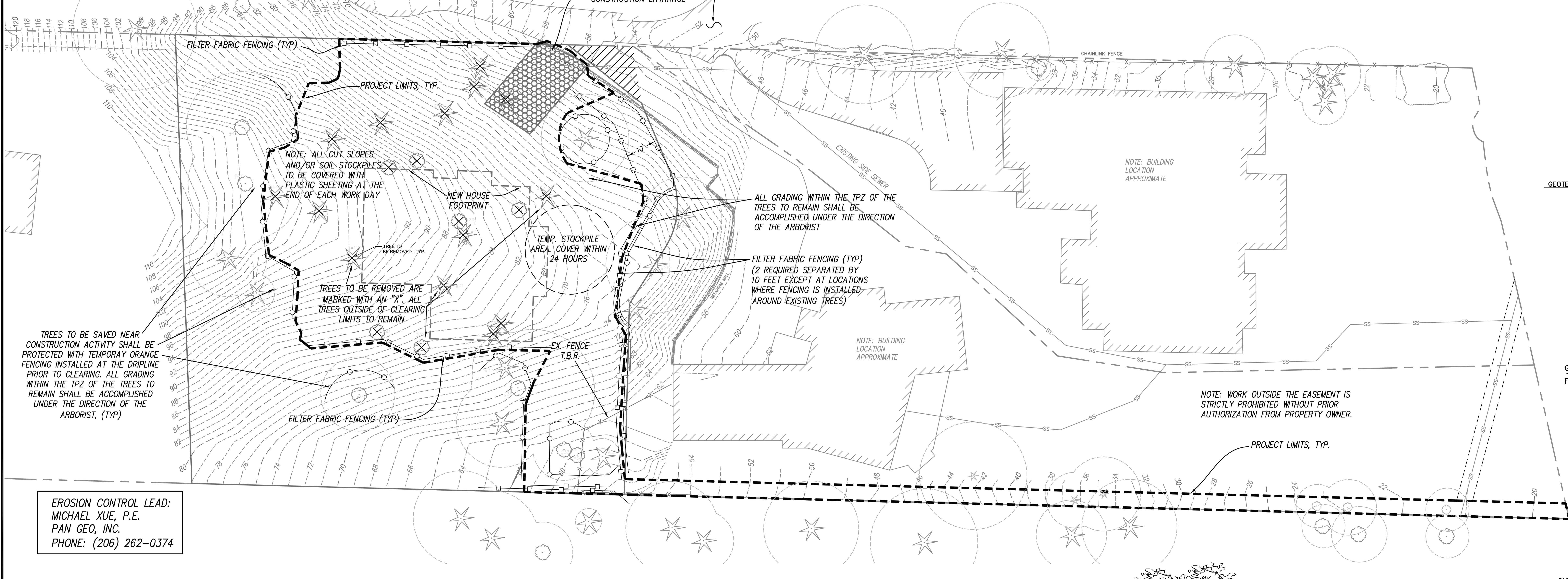

EROSION CONTROL LEAD:
MICHAEL XUE, P.E.
PAN GEO, INC.
PHONE: (206) 262-0374

CALL 3 WORKING DAYS BEFORE YOU DIG
811
UTILITIES UNDERGROUND LOCATION CENTER
(ID,MT,ND,OR,WA)
ELECTRIC - RED SEWER - GREEN GAS/OIL - YELLOW SURVEY - PINK
TEL/CATV - ORANGE PROPOSED - WHITE WATER - BLUE
SAFETY PRECAUTION SHALL BE IMPLEMENTED BY CONTRACTOR(S) AT ALL TRENCHING IN ACCORDANCE WITH CURRENT OSHA STANDARDS

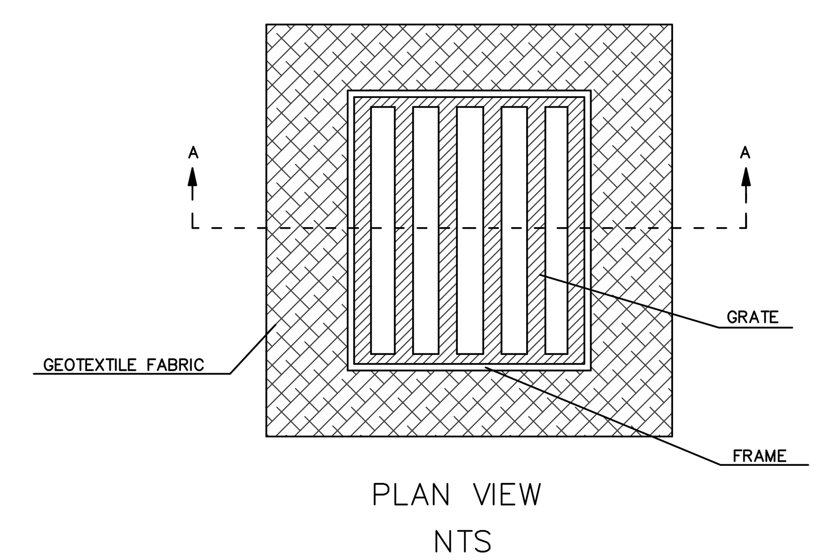

PLAN VIEW
NTS

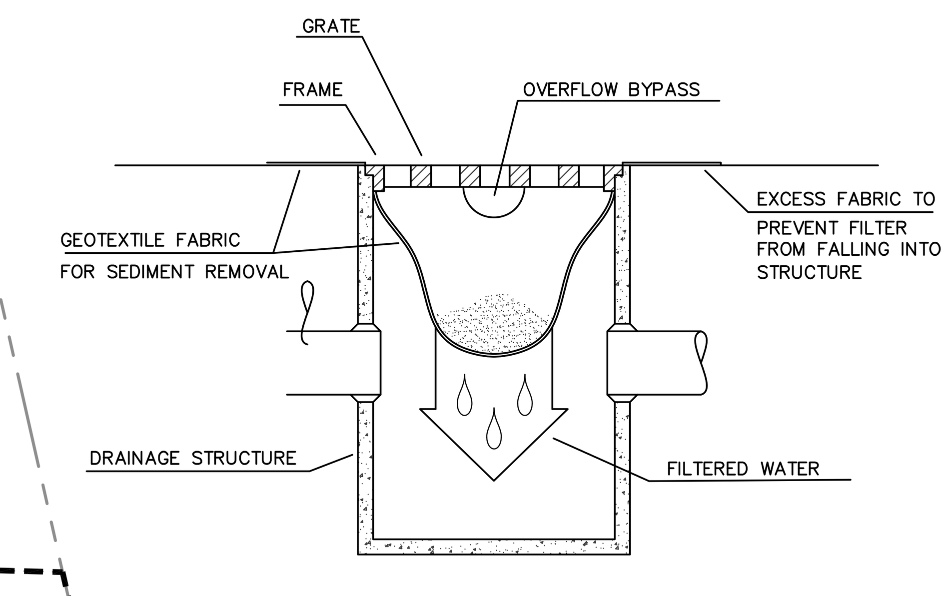

STORM DRAIN PROTECTION INSERT
SECTION A-A
NTS

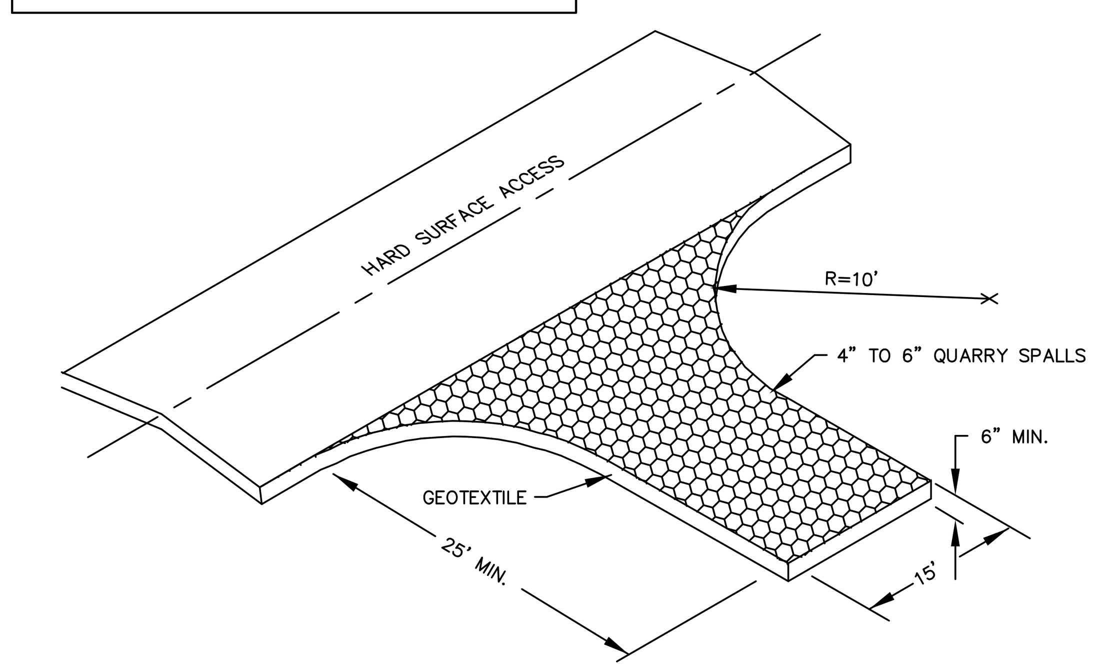

TEMPORARY GRAVEL CONSTRUCTION ENTRANCE
N.T.S.

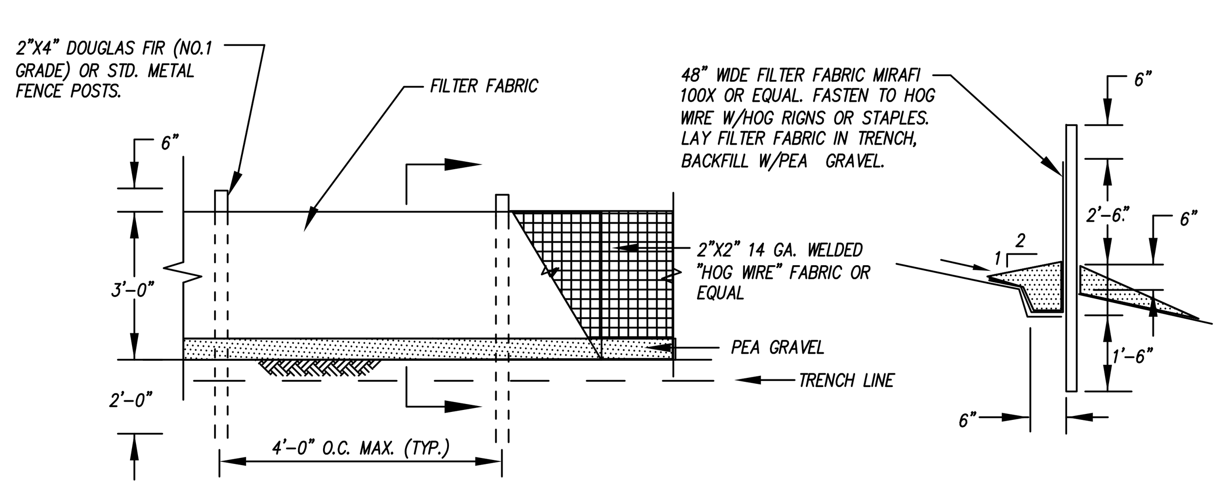

FILTER FABRIC FENCING
N.T.S.

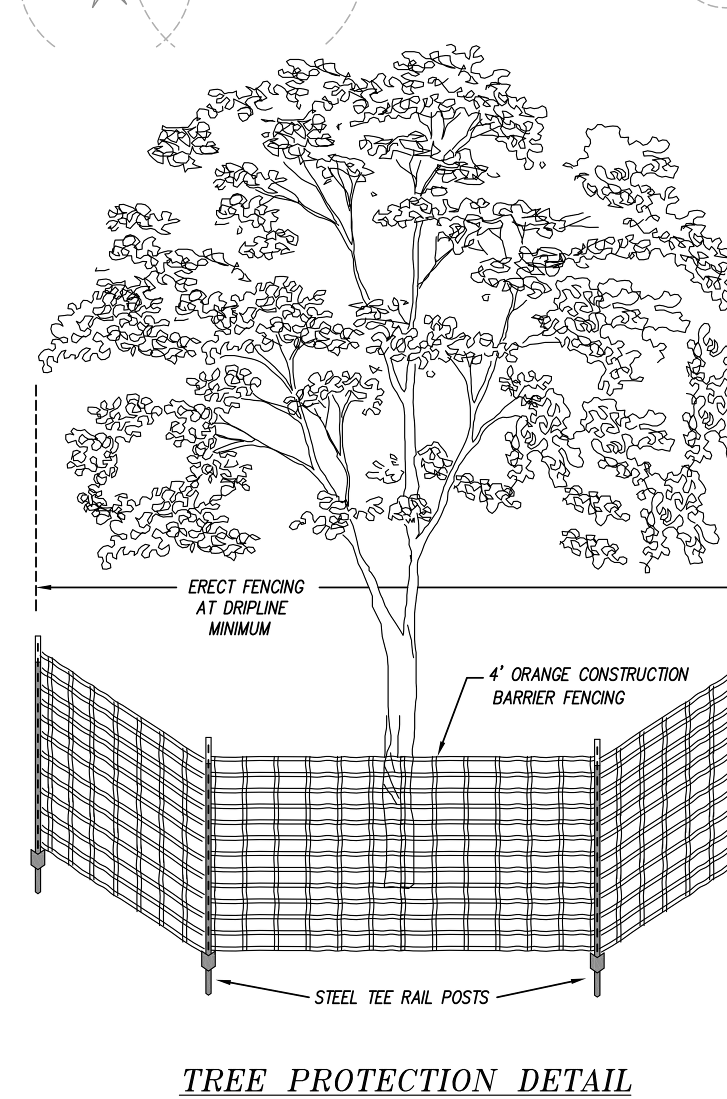

TREE PROTECTION DETAIL
N.T.S.

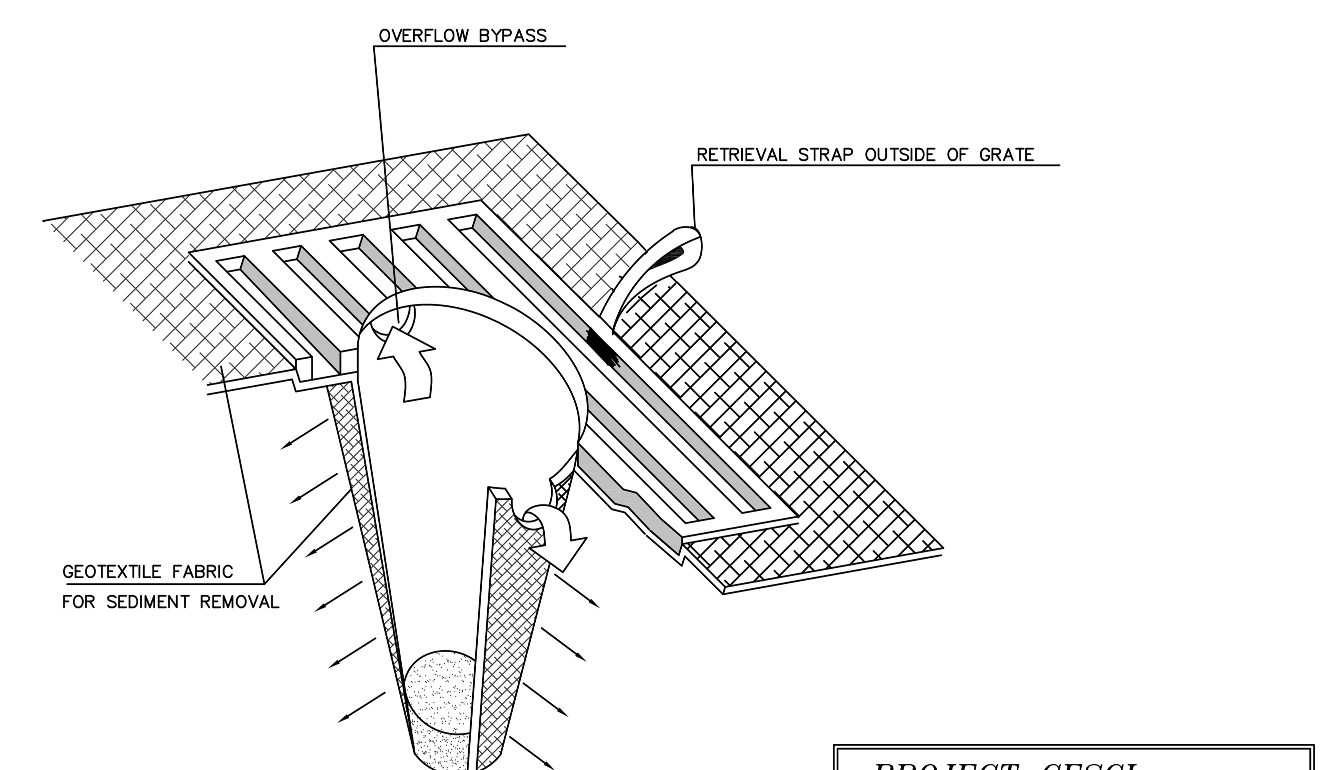

STORM DRAIN PROTECTION INSERT
ISOMETRIC VIEW (TYP.)
NTS

PROJECT CESCL
MICHAEL H. XUE, PE, CESCL
PANGEO, INC.
(206) 262-0374 (O)
(206) 491-0081 (C)

APPROVED: ______
CITY OF MERCER ISLAND DEVELOPMENT SERVICES GROUP Date

STAMP NOT VALID UNLESS SIGNED AND DATED

DWN BY	CHKD BY	DATE	NOTES
KAL	KAL	6-16-15	SUBMITTED TO CLIENT
KAL	KAL	10-1-15	REVISED PER CITY COMMENTS
KAL	KAL	10-19-15	REVISED PER CITY COMMENTS
KAL	KAL	3-25-16	ADD EXCAVATION PLAN: SHEET 5
KAL	KAL	5-25-16	PER CITY COMMENTS
KAL	KAL	6-14-17	UPDATED PER STREAM BUFFER
KAL	KAL	8-3-18	PER CITY COMMENTS
KAL	KAL	1-22-19	PER CITY COMMENTS
KAL	KAL	5-15-19	PER CITY COMMENTS

LITCHFIELD ENGINEERING
12840 81ST AVENUE NE
Kirkland, WA 98034
Tel (425) 821-5038 Fax (425) 821-5739

Copyright © 2000 Litchfield Engineering, Inc. All rights reserved.

T.E.S.C. PLAN
BARCELLO HOMES S.F.R.
4634 EAST MERCER WAY

BOGDAN MAKSIMCHUK
P.O. BOX 1733
AUBURN, WA. 98071

JOB No.

SITE IMPROVEMENT NOTES

1. PROOF OF LIABILITY INSURANCE SHALL BE SUBMITTED TO THE CITY PRIOR TO THE PRE-CONSTRUCTION MEETING.
2. THESE PLANS ARE APPROVED FOR GRADING, DRAINAGE, AND UTILITY IMPROVEMENTS ONLY. PLANS FOR STRUCTURES REQUIRE A SEPARATE REVIEW AND APPROVAL.
3. RETAINING WALLS GREATER THAN FOUR (4) FEET IN HEIGHT REQUIRE A SEPARATE BUILDING PERMIT.
4. FILL MATERIAL PLACED UNDER BUILDING FOUNDATIONS OR PAVEMENT SHALL BE CRUSHED BASE ROCK OR COMPACTED STRUCTURAL FILL IN ACCORDANCE WITH CITY AND WSDOT STANDARD SPECIFICATIONS.
5. ALL DRAINAGE STRUCTURES, SUCH AS CATCH BASINS AND MANHOLES, NOT LOCATED WITHIN A TRAVELED ROADWAY OR SIDEWALK, SHALL HAVE SOLID LOCKING LIDS.
6. THIS PLAN DOES NOT SHOW THE LOCATION OF ALL EXISTING UTILITIES, IT IS THE RESPONSIBILITY OF THE CONTRACTOR TO LOCATE ALL EXISTING UTILITIES PRIOR TO EXCAVATION.
7. THE CONTRACTOR SHALL EXPOSE ALL EXISTING PIPING THAT WILL BE CONNECTED TO WITH NEW PIPING. DEPTH, LOCATION, AND CONDITION SHALL BE RELAYED TO THE ENGINEER IF CONDITIONS VARY SIGNIFICANTLY FROM WHAT IS DETAILED OR ANTICIPATED.
8. ALL WORK SHALL BE PERFORMED IN STRICT ACCORDANCE TO DETAILS AND SPECIFICATIONS OF CITY STANDARDS. ALL CONSTRUCTION DEBRIS GENERATED DURING CONSTRUCTION TO BE REMOVED & DISPOSED OF AT AN APPROVED LOCATION OFF SITE.
9. ALL CUT MATERIAL GENERATED DURING THE PROJECT THAT IS NOT ACCEPTABLE FOR USE AS COMPACTED FILL MATERIAL AT ANOTHER LOCATION ON-SITE MUST BE HAULED TO AN APPROVED LOCATION OFF-SITE.

DRAINAGE GENERAL NOTES

1. A PRE-CONSTRUCTION CONFERENCE SHALL BE HELD PRIOR TO THE START OF CONSTRUCTION. THE CONTRACTOR SHALL BE RESPONSIBLE FOR SECURING ALL NECESSARY PERMITS PRIOR TO CONSTRUCTION.
2. BEFORE ANY CONSTRUCTION MAY OCCUR, THE CONTRACTOR SHALL HAVE PLANS WHICH HAVE BEEN SIGNED AND APPROVED BY THE CITY OF MERCER ISLAND PUBLIC WORKS DEPARTMENT, OBTAINED ALL CITY, COUNTY, STATE, FEDERAL AND OTHER REQUIRED PERMITS, AND HAVE POSTED ALL REQUIRED BONDS.
3. ALL STORM DRAINAGE IMPROVEMENTS SHALL BE DESIGNED AND CONSTRUCTED IN ACCORDANCE WITH THE LATEST EDITION OF THE CITY OF MERCER ISLAND PUBLIC WORKS PRE-APPROVED PLANS AND POLICIES AND THE STANDARD SPECIFICATIONS FOR ROAD, BRIDGE AND MUNICIPAL CONSTRUCTION, PREPARED BY WSDOT AND THE AMERICAN PUBLIC WORKS ASSOCIATION (APWA).
4. ANY DEVIATION FROM THE APPROVED PLANS WILL REQUIRE WRITTEN APPROVAL, ALL CHANGES SHALL BE SUBMITTED TO THE CITY.
5. A COPY OF THE APPROVED STORM WATER PLANS MUST BE ON THE JOB SITE WHENEVER CONSTRUCTION IS IN PROGRESS.
6. ALL DISTURBED AREAS SHALL BE SEEDED AND MULCHED OR SIMILARLY STABILIZED TO THE SATISFACTION OF THE CITY OF MERCER ISLAND DEPARTMENT OF PUBLIC WORKS FOR THE PREVENTION OF ON-SITE EROSION AFTER THE COMPLETION OF CONSTRUCTION.
7. MINIMUM COVER OVER STORM DRAINAGE PIPES IN ROW OR VEHICULAR PATH SHALL BE 18 INCHES, UNLESS OTHER DESIGN IS APPROVED.
8. CONSTRUCTION OF DEWATERING (GROUNDWATER) SYSTEMS SHALL BE IN ACCORDANCE WITH THE APWA STANDARD SPECIFICATIONS.
9. ALL TRENCH BACKFILL SHALL BE COMPACTED TO 95 PERCENT DENSITY IN ROADWAYS, ROADWAY SHOULDERS, ROADWAY PRISM AND DRIVEWAYS, AND 85 PERCENT DENSITY IN UNPAVED AREAS. ALL PIPE ZONE COMPACTION SHALL BE 95 PERCENT.
10. THE CONTRACTOR SHALL BE RESPONSIBLE FOR PROVIDING ADEQUATE SAFEGUARDS, SAFETY DEVICES, PROTECTIVE EQUIPMENT, CONFINED SPACE PROTECTION, FLAGGERS, AND ANY OTHER NEEDED ACTIONS TO PROTECT THE LIFE, HEALTH, AND SAFETY OF THE PUBLIC, AND TO PROTECT PROPERTY IN CONNECTION WITH THE PERFORMANCE OF WORK COVERED BY THE CONTRACT.
11. APPROXIMATE LOCATIONS OF EXISTING UTILITIES HAVE BEEN OBTAINED FROM AVAILABLE RECORDS AND ARE SHOWN FOR CONVENIENCE. THE CONTRACTOR SHALL BE RESPONSIBLE FOR VERIFICATION OF EXISTING UTILITY LOCATIONS WHETHER OR NOT THESE UTILITIES ARE SHOWN ON THE PLANS. THE CONTRACTOR SHALL EXERCISE ALL CARE TO AVOID DAMAGE TO ANY UTILITY. IF CONFLICTS WITH EXISTING UTILITIES ARISE DURING CONSTRUCTION, THE CONTRACTOR SHALL NOTIFY THE CITY CONSTRUCTION INSPECTOR AND ANY CHANGES REQUIRED SHALL BE APPROVED BY THE DEVELOPMENT ENGINEER PRIOR TO COMMENCEMENT OF RELATED CONSTRUCTION ON THE PROJECT.
12. THE UNDERGROUND UTILITY LOCATION SERVICE SHALL BE CONTACTED FOR FIELD LOCATION OF EXISTING UTILITIES PRIOR TO ANY CONSTRUCTION. THE OWNER OR HIS REPRESENTATIVE SHALL BE CONTACTED IF A UTILITY CONFLICT EXISTS. FOR UTILITY LOCATION IN KING COUNTY, CALL 811. THE CONTRACTOR IS RESPONSIBLE TO ENSURE THAT UTILITY LOCATES ARE MAINTAINED THROUGHOUT THE LIFE OF THE PROJECT.
13. OPEN CUT ROAD CROSSINGS FOR UTILITY TRENCHES ON EXISTING TRAVELED ROADWAY SHALL BE BACKFILLED ONLY WITH 5/8" MINUS CRUSHED ROCK AND MECHANICALLY COMPACTED (UNLESS OTHERWISE APPROVED BY THE CITY). CUTS INTO THE EXISTING ASPHALT SHALL BE NEAT LINE CUT WITH SAW OR JACKHAMMER IN A CONTINUOUS LINE. A TEMPORARY COLD MIX PATCH MUST BE PLACED IMMEDIATELY AFTER BACKFILL AND COMPACTION. A PERMANENT HOT MIX PATCH SHALL BE PLACED WITHIN 30 DAYS AND SHALL BE A MINIMUM OF 1" THICKER THAN THE ORIGINAL ASPHALT WITH A MINIMUM THICKNESS OF 2".
14. ALL DAMAGES INCURRED TO PUBLIC AND/OR PRIVATE PROPERTY BY THE CONTRACTOR DURING THE COURSE OF CONSTRUCTION SHALL BE PROMPTLY REPAIRED TO THE SATISFACTION OF THE CITY CONSTRUCTION INSPECTOR BEFORE PROJECT APPROVAL AND/OR THE RELEASE OF THE PROJECT'S PERFORMANCE BOND.
15. GROUT ALL SEAMS AND OPENINGS IN ALL INLETS, CATCH BASINS, AND MANHOLES.

① PUMP SYSTEM CALL-OUT

ORENCO 30" PUMP BASIN & COVER
W/DUPLEX SUBMERSIBLE PUMPS.
PUMPS TO BE ALTERNATING AND
FUNCTION AS A LEAD/LAG SYSTEM
RIM = 61.00
IE 6" PVC = 55.00 (ALL PIPES)
BASE = 51.00
(PER PUMP SYSTEM DETAIL)

② BACK-UP GENERATOR NOTES

1. ELECTRICAL CONTRACTOR TO PROVIDE GENERATOR AND TRANSFER SWITCH FOR BATTERY BACK-UP & AUTO START FOR SERVICE TO PUMPS DURING UTILITY OUTAGE.
2. DUPLEX PUMP CONTROL PANEL & TRANSFER SWITCH TO BE LOCATED IN GARAGE.

ARCHITECTURAL, STRUCTURAL & GEOTECHNICAL NOTES

1. THESE PLANS ARE APPROVED FOR STANDARD ROAD AND DRAINAGE IMPROVEMENTS ONLY. PLANS FOR STRUCTURES SUCH AS RETAINING WALLS REQUIRE A SEPARATE REVIEW AND APPROVAL PRIOR TO CONSTRUCTION.
2. SPECIAL INSPECTIONS FOR GEOTECHNICAL AND/OR STRUCTURAL ASPECTS OF OF THE PROJECT MAY BE REQUIRED DURING VARIOUS STAGES OF THE PROECT. CONTRACTOR TO BE RESPONSIBLE FOR COORDINATION AND OBTAINING INSPECTIONS WHEN AND WHERE NECESSARY.
3. SEE ARCHITECTURAL PLANS FOR BUILDING SECTIONS AND ALL LOCATIONAL/DIMENSIONAL ASPECTS OF BUILDINGS.
4. SEE ARCHITECTURAL AND STRUCTURAL PLANS FOR ALL BUILDING AND RETAINING WALL DETAILS.
5. COORDINATE ALL SITE CIVIL CONSTRUCTION WITH ARCHITECTURAL, STRUCTURAL, MECHANICAL/PLUMBING AND LANDSCAPE PLANS AND IN ACCORDANCE WITH GEOTECHNICAL RECOMMENDATIONS.
6. PRIOR TO CONSTRUCTION THE EARTHWORK/GENERAL CONTRACTOR TO BE COMPLETELY FAMILIAR WITH THE GEOTECHNICAL REPORT AND RECOMMENDATIONS. PLEASE REVIEW PANGEO, INC.'S REPORT DATED MARCH 31, 2014 AND CONTACT MICHAEL XUE, PE ON ANY QUESTIONS OR CONCERNS REGARDING HIS RECOMMENDATIONS.

GRADING NOTES:

1. ALL CUT MATERIAL GENERATED DURING THE PROJECT THAT IS NOT ACCEPTABLE FOR USE AS COMPACTED FILL MATERIAL AT ANOTHER LOCATION ON-SITE MUST BE HAULED TO AN APPROVED LOCATION OFF-SITE.
2. THE ON-SITE TOPOGRAPHICAL MAPPING WAS PROVIDED BY EMERALD LAND SURVEYING, INC.
3. ALL TEMPORARY OR PERMANENT SLOPES SHALL NOT EXCEED 2H:1V UNLESS APPROVED BY A GEOTECHNICAL ENGINEER.
4. FILL MATERIAL PLACED UNDER BUILDING FOUNDATIONS OR PAVEMENT SHALL BE CRUSHED BASE ROCK OR COMPACTED STRUCTURAL FILL IN ACCORDANCE TO WSDOT STANDARD SPECIFICATIONS.
5. ROCKERY AND/OR RETAINING WALLS GREATER THAN FOUR (4) FEET IN HEIGHT REQUIRES A BUILDING PERMIT.
6. IT WILL BE THE PERMITEE'S RESPONSIBILITY TO SUCCESSFULLY CAP AND ABANDON ALL EXISTING UTILITIES WITHIN THE DEVELOPMENT IN ACCORDANCE TO THE GOVERNING UTILITY AGENCY.

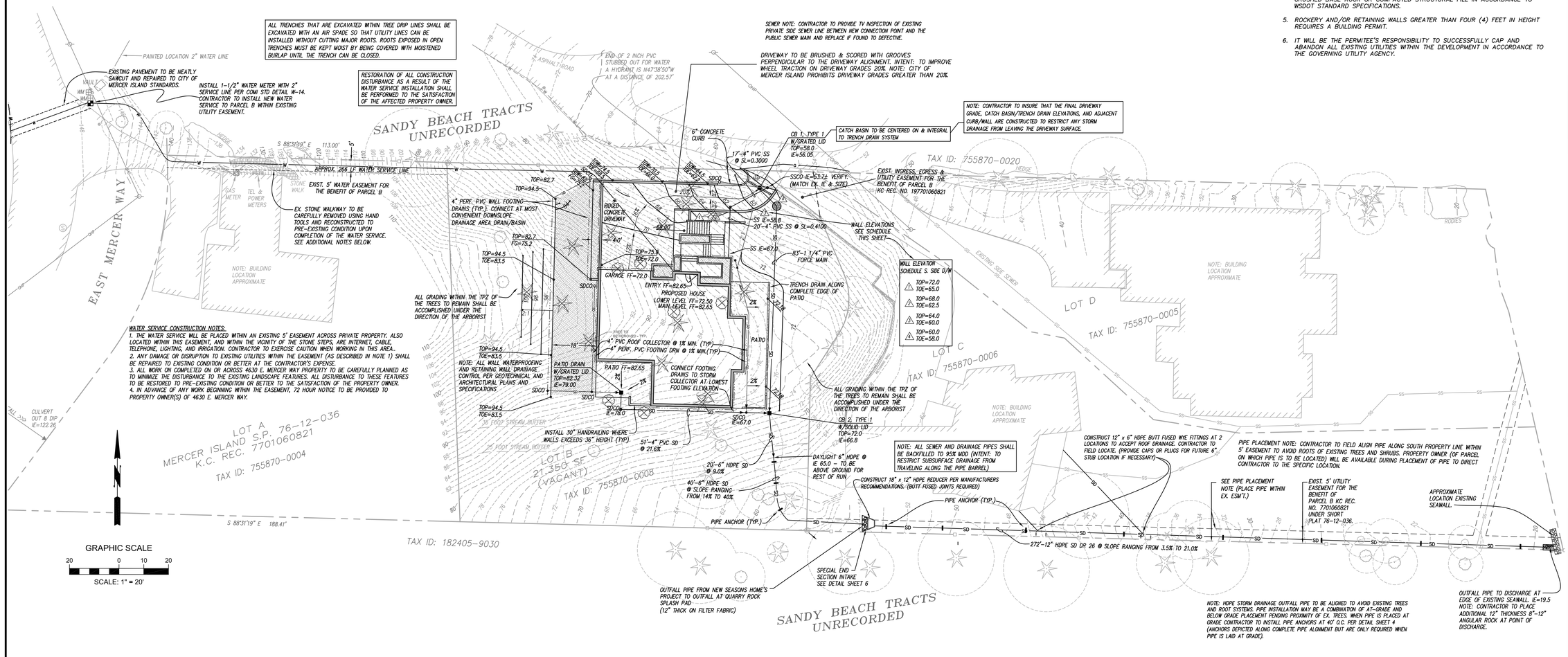

CALL 3 WORKING DAYS BEFORE YOU DIG
811
UTILITIES UNDERGROUND LOCATION CENTER
(ID,MT,ND,OR,WA)
SAFETY PRECAUTIONARY MEASURES TO BE IMPLEMENTED BY CONTRACTORS IF ALL TRENCHING IS IN ACCORDANCE WITH CURRENT OSHA STANDARDS
ELECTRIC=RED TELECM=ORANGE SEWER=GREEN PROPOSED=WHITE GAS/OIL=YELLOW WATER=BLUE SURVEY=PINK

PROJECT CESCL
MICHAEL H. XUE, PE, CESCL
PANGEO, INC.
(206) 262-0374 (O)
(206) 491-0081 (C)

APPROVED:
CITY OF MERCER ISLAND DEVELOPMENT SERVICES GROUP Date

STAMP NOT VALID UNLESS SIGNED AND DATED

DWN BY	CHKD BY	DATE	NOTES
KAL	KAL	6-16-15	SUBMITTED TO CLIENT
KAL	KAL	7-6-15	REVISED PER CITY COMMENTS
KAL	KAL	10-19-15	REVISED PER CITY COMMENTS
KAL	KAL	3-25-16	ADD EXCAVATION PLAN; SHEET 5
KAL	KAL	5-25-16	PER CITY COMMENTS
KAL	KAL	6-14-17	UPDATED PER STREAM BUFFER
KAL	KAL	10-10-17	PER CITY COMMENTS
KAL	KAL	8-3-18	PER CITY COMMENTS
KAL	KAL	1-22-19	PER CITY COMMENTS
KAL	KAL	5-15-19	PER CITY COMMENTS

LITCHFIELD ENGINEERING
12840 51ST AVENUE NE
Kirkland, WA 98034
Tel (425) 821-5038 Fax (425) 821-5739

Copyright © 2000 Litchfield Engineering, Inc. All rights reserved.

SITE IMPROVEMENT PLAN
BARCELLO HOMES S.F.R.
4634 EAST MERCER WAY

BOGDAN MAKSIMCHUK
P.O. BOX 1733
AUBURN, WA. 98071

SHEET
3 of 6

JOB No.

FIGURE 4.2.1.C CORRUGATED METAL PIPE COUPLING AND/OR GENERAL PIPE ANCHOR ASSEMBLY

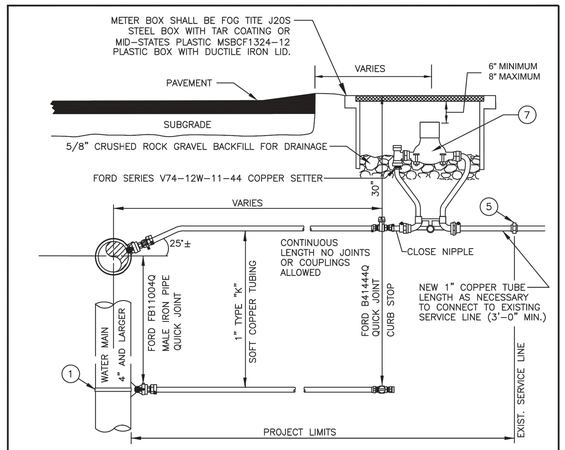

NOTES

1. WATER SERVICES SHALL COMPLY WITH THE REDUCTION OF LEAD IN DRINKING WATER ACT DATED 01/04/2014.
2. ON EXISTING WATER MAINS USE NYLON COATED D.I. SADDLE WITH STAINLESS STEEL SINGLE STRAP, ROMAC 101NS, OR APPROVED EQUAL. ON NEW DUCTILE IRON WATER MAIN 6" DIA. OR LARGER, THE SERVICE MAY BE DIRECTLY TAPPED.
3. MINIMUM DISTANCE BETWEEN CORP STOPS SHALL BE 18". MINIMUM DISTANCE BETWEEN TAPS, BETWEEN CORP STOP AND PIPE ENDS SHALL BE 24", ALL HORIZONALLY STAGGERED.
4. PLASTIC METER BOXES SHALL NOT BE INSTALLED WITHIN ROADWAY, SIDEWALK, OR DRIVEWAYS.
5. WHEN METER BOXES ARE INSTALLED IN PORTLAND CEMENT CONCRETE PAVEMENT OR SIDEWALK, CONTINUOUS FELT EXPANSION MATERIAL SURROUNDING THE PERIMETER OF THE METER BOX SHALL BE PROVIDED.
6. WHEN CONNECTING TO EXISTING SERVICE LINE CONTAINING FERROUS METAL, PROVIDE INSULATING COUPLING (DB SERIES WITH C21 SERIES ADAPTERS) AND PROVIDE REDUCER AS NECESSARY TO MATCH EXISTING SERVICE LINE DIAMETER.
7. SERVICE LINE SHALL BE PERPENDICULAR TO THE WATER MAIN AND STRAIGHT TO WATER METER, UNLESS OTHERWISE APPROVED BY CITY ENGINEER. PROVIDE WINDING SLACK IN THE SERVICE LINE BETWEEN THE MAIN AND WATER METER.
8. WATER METER SUPPLIED BY CITY.
9. ALL FITTINGS TO BE BRASS COMPRESSION TYPE, FORD QUICK JOINT OR EQUAL.
10. NO SERVICE CONNECTIONS BETWEEN BLOW-OFF AND END OF MAIN.

CITY OF MERCER ISLAND
STANDARD DETAILS
WATER

1" WATER METER INSTALLATION

09-26-2017	NO SCALE	W-13

REV DATE						APPROVED

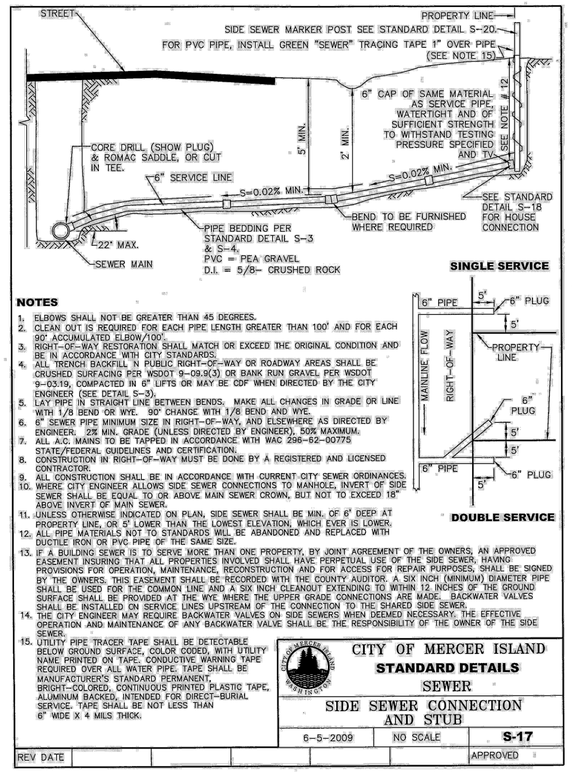

NOTES

1. ELBOWS SHALL NOT BE GREATER THAN 45 DEGREES.
2. CLEAN OUT IS REQUIRED FOR EACH PIPE LENGTH GREATER THAN 100' AND FOR EACH 90° ACCUMULATED ELBOW/100'.
3. RIGHT-OF-WAY RESTORATION SHALL MATCH OR EXCEED THE ORIGINAL CONDITION AND BE IN ACCORDANCE WITH CITY STANDARDS.
4. ALL TRENCH BACKFILL N PUBLIC RIGHT-OF-WAY OR ROADWAY AREAS SHALL BE CRUSHED SURFACING PER WSDOT 9-09.9(3) OR BANK RUN GRAVEL PER WSDOT 9-03.19, COMPACTED IN 6" LIFTS OR MAY BE CDF WHEN DIRECTED BY THE CITY ENGINEER (SEE DETAIL S-3).
5. LAY PIPE IN STRAIGHT LINE BETWEEN BENDS. MAKE ALL CHANGES IN GRADE OR LINE WITH 1/8 BEND OR WYE. 90° CHANGE WITH 1/8 BEND AND WYE.
6. 6" SEWER PIPE MINIMUM SIZE IN RIGHT-OF-WAY, AND ELSEWHERE AS DIRECTED BY ENGINEER. 2% MIN. GRADE (UNLESS DIRECTED BY ENGINEER), 50% MAXIMUM.
7. ALL A.C. MAINS TO BE TAPPED IN ACCORDANCE WITH WAC 296-62-00775 STATE/FEDERAL GUIDELINES AND CERTIFICATION.
8. CONSTRUCTION IN RIGHT-OF-WAY MUST BE DONE BY A REGISTERED AND LICENSED CONTRACTOR.
9. ALL CONSTRUCTION SHALL BE IN ACCORDANCE WITH CURRENT CITY SEWER ORDINANCES.
10. WHERE CITY ENGINEER ALLOWS SIDE SEWER CONNECTIONS TO MANHOLE, INVERT OF SIDE SEWER SHALL BE EQUAL TO OR ABOVE MAIN SEWER CROWN, BUT NOT TO EXCEED 18" ABOVE INVERT OF MAIN SEWER.
11. UNLESS OTHERWISE INDICATED ON PLAN, SIDE SEWER SHALL BE MIN. OF 6' DEEP AT PROPERTY LINE, OR 5' LOWER THAN THE LOWEST ELEVATION, WHICH EVER IS LOWER.
12. ALL PIPE MATERIALS NOT TO STANDARDS WILL BE ABANDONED AND REPLACED WITH DUCTILE IRON OR PVC PIPE OF THE SAME SIZE.
13. IF A BUILDING SEWER IS TO SERVE MORE THAN ONE PROPERTY, BY JOINT AGREEMENT OF THE OWNERS, AN APPROVED EASEMENT INSURING THAT ALL PROPERTIES INVOLVED SHALL HAVE PERPETUAL USE OF THE SIDE SEWER, HAVING PROVISIONS FOR OPERATION, MAINTENANCE, RECONSTRUCTION AND FOR ACCESS FOR REPAIR PURPOSES, SHALL BE SIGNED BY THE OWNERS. THIS EASEMENT SHALL BE RECORDED WITH THE COUNTY AUDITOR. A SIX INCH (MINIMUM) DIAMETER PIPE SHALL BE USED FOR THE COMMON LINE AND A SIX INCH CLEANOUT EXTENDING TO WITHIN 12 INCHES OF THE GROUND SURFACE SHALL BE PROVIDED AT THE WYE WHERE THE UPPER GRADE CONNECTIONS ARE MADE. BACKWATER VALVES SHALL BE INSTALLED ON SERVICE LINES UPSTREAM OF THE CONNECTION TO THE SHARED SIDE SEWER.
14. THE CITY ENGINEER MAY REQUIRE BACKWATER VALVES ON SIDE SEWERS WHEN DEEMED NECESSARY. THE EFFECTIVE OPERATION AND MAINTENANCE OF ANY BACKWATER VALVE SHALL BE THE RESPONSIBILITY OF THE OWNER OF THE SIDE SEWER.
15. UTILITY PIPE TRACER TAPE SHALL BE DETECTABLE BELOW GROUND SURFACE, COLOR CODED, WITH UTILITY NAME PRINTED ON TAPE. CONDUCTIVE WARNING TAPE REQUIRED OVER ALL WATER PIPE. TAPE SHALL BE MANUFACTURER'S STANDARD PERMANENT, BRIGHT-COLORED, CONTINUOUS PRINTED PLASTIC TAPE, ALUMINUM BACKED, INTENDED FOR DIRECT-BURIAL SERVICE. TAPE SHALL BE NOT LESS THAN 6" WIDE X 4 MILS THICK.

CITY OF MERCER ISLAND
STANDARD DETAILS
SEWER

SIDE SEWER CONNECTION AND STUB

6-5-2009	NO SCALE	S-17

REV DATE						APPROVED

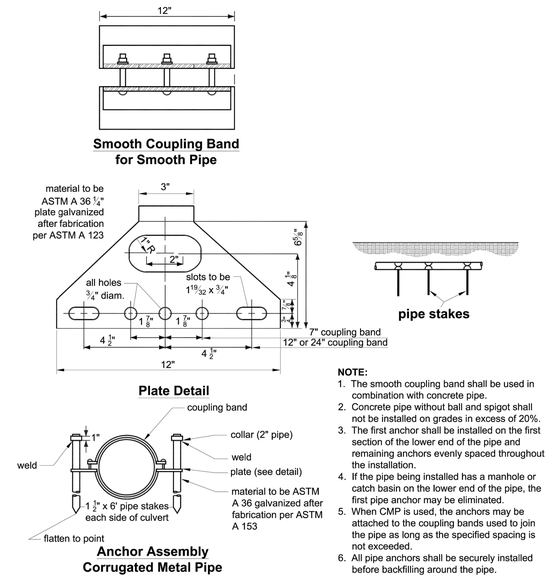

NOTE:

1. The smooth coupling band shall be used in combination with concrete pipe.
2. Concrete pipe without ball and spigot shall not be installed on grades in excess of 20%.
3. The first anchor shall be installed on the first section of the lower end of the pipe and remaining anchors evenly spaced throughout the installation.
4. If the pipe being installed has a manhole or catch basin on the lower end of the pipe, the first pipe anchor may be eliminated.
5. When CMP is used, the anchors may be attached to the coupling bands used to join the pipe as long as the specified spacing is not exceeded.
6. All pipe anchors shall be securely installed before backfilling around the pipe.

PUMP SYSTEM SPECIFICATIONS:

1. PUMP BASIN, CONTROL PANEL, PUMPS, AND ALL ASSOCIATED COMPONENTS SHALL BE BY ORENCO SYSTEMS, INC. TECHNICAL AND/OR INSTALLATION SUPPORT PHONE NUMBER: TRISTIAN BOUNDS 800-348-9843, EXT 236. ORDER FROM HD FOWLER: KEVIN GABRIEL 425-746-8400.

2. PUMP BASIN TO BE 30" DIAMETER WITH LID MOUNTED WITH STAINLESS STEEL SCREWS.

3. PUMPS TO BE SINGLE PHASE, 230 VOLT, MODEL PSE 15012; CONTROL PANEL TO BE MODEL DAX 2 ETMCT WITH ELAPSED TIME METER AND PUMP COUNTER; FLOAT SWITCHES TO BE MF4A-YP,B,R,W (4 FLOATS REQ'D)

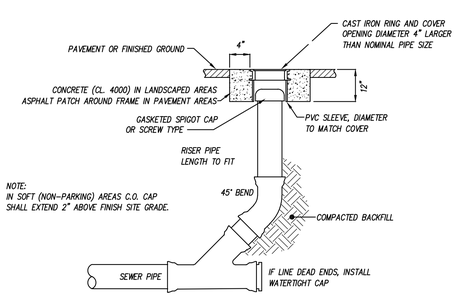

CLEAN OUT DETAIL

N.T.S.

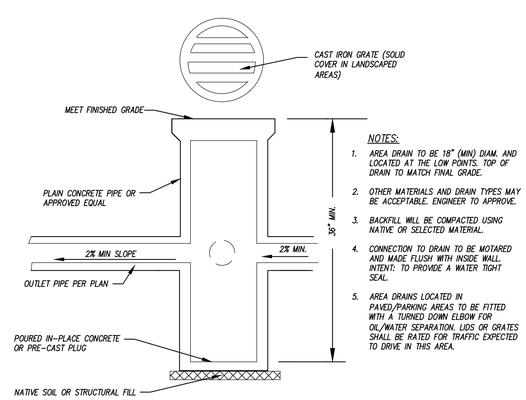

NOTES:

1. *AREA DRAIN TO BE 18" (MIN) DIAM. AND LOCATED AT THE LOW POINTS. TOP OF DRAIN TO MATCH FINAL GRADE.*
2. *OTHER MATERIALS AND DRAIN TYPES MAY BE ACCEPTABLE. ENGINEER TO APPROVE.*
3. *BACKFILL WILL BE COMPACTED USING NATIVE OR SELECTED MATERIAL.*
4. *CONNECTION TO DRAIN TO BE MOTARED AND MADE FLUSH WITH INSIDE WALL. INTENT: TO PROVIDE A WATER TIGHT SEAL.*
5. *AREA DRAINS LOCATED IN PAVED/PARKING AREAS TO BE FITTED WITH A TURNED DOWN ELBOW FOR OIL/WATER SEPARATION. LIDS OR GRATES SHALL BE RATED FOR TRAFFIC EXPECTED TO DRIVE IN THIS AREA.*

AREA DRAIN

N.T.S.

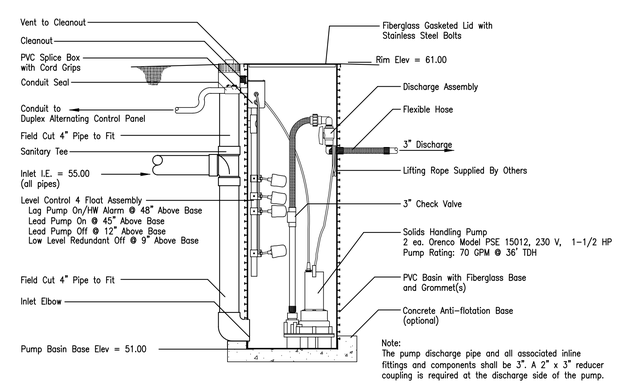

Note:
The pump discharge pipe and all associated inline fittings and components shall be 3". A 2" x 3" reducer coupling is required at the discharge side of the pump.

30" PUMP BASIN DETAIL

NOT TO SCALE

APPROVED:

CITY OF MERCER ISLAND DEVELOPMENT SERVICES GROUP *Date*

DWN BY	CHKD BY	DATE	NOTES
KAL	KAL	6-16-15	SUBMITTED TO CLIENT
KAL	KAL	10-19-15	REVISED PE CITY COMMENTS
KAL	KAL	3-25-16	ADD EXCAVATION PLAN; SHEET 5
KAL	KAL	02-09-18	REVISED SITE PLAN
KAL	KAL	08-03-18	PER CITY COMMENTS

STAMP NOT VALID UNLESS SIGNED AND DATED

LITCHFIELD ENGINEERING
12840 81ST AVENUE NE
Kirkland, WA 98034
Tel (425) 821-5038 Fax (425) 821-5739

Copyright © 2000 Litchfield Engineering, Inc. All rights reserved.

CONSTRUCTION DETAILS
BARCELLO HOMES S.F.R.
4634 EAST MERCER WAY
BOGDAN MAKSIMCHUK
P.O. BOX 1733
AUBURN, WA. 98071

JOB No.

SPECIAL NOTE TO CONTRACTOR: THE DETAILS & NOTES REGARDING TEMPORARY/PERMANENT CUTS, SOIL STABILIZATION, SOLDIER PILE/RETAINING WALL CONSTRUCTION ARE FOR CONVENIENCE ONLY. CONTRACTOR TO REFER TO STRUCTURAL PLANS & GEOTECHNICAL REPORTS FOR DETAILS & RECOMMENDATIONS.

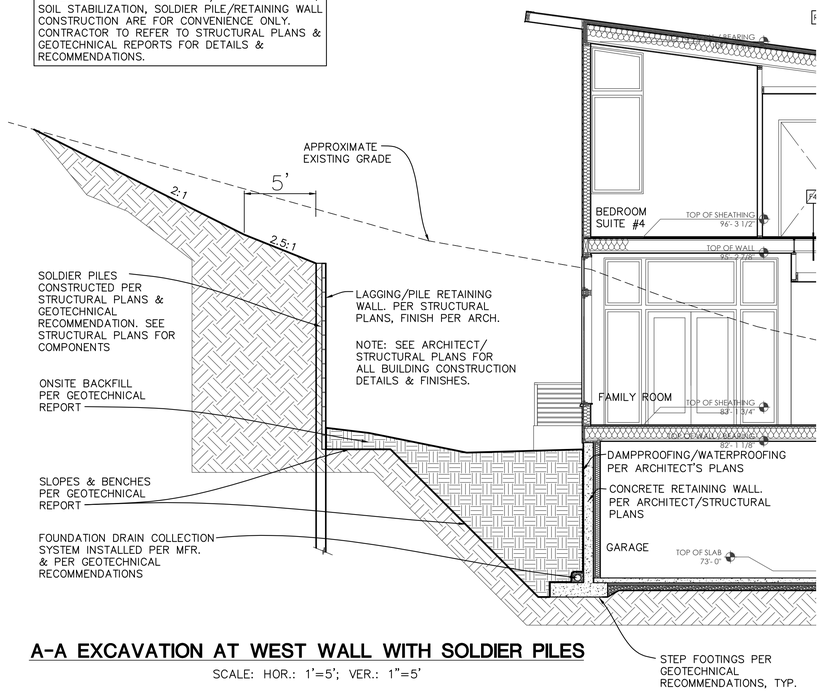

A-A EXCAVATION AT WEST WALL WITH SOLDIER PILES

SCALE: HOR.: 1'=5'; VER.: 1"=5'

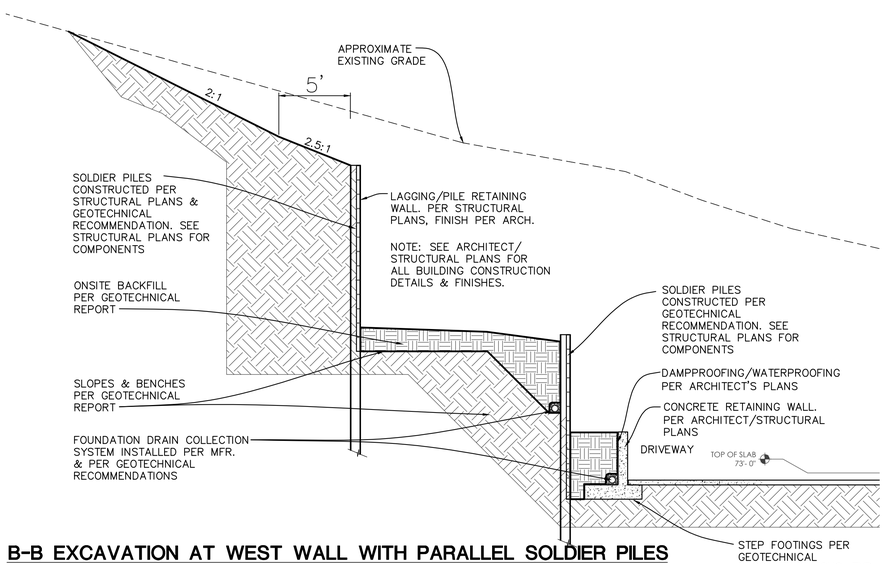

B-B EXCAVATION AT WEST WALL WITH PARALLEL SOLDIER PILES

SCALE: HOR.: 1'=5'; VER.: 1"=5'

SPECIAL GEOTECHNICAL ULTRABLOCK NOTES

GEOTECHNICAL RECOMMENDATIONS FOR TEMPORARY EXCAVATIONS AND SHORING USING ULTRABLOCKS

1. THE MAXIMUM WALL HEIGHT OF STAGGERED BLOCKS IS 7½ FEET (I.E., 3 BLOCKS IN HEIGHT);
2. THE VERTICAL WALL FACE IS NO STEEPER THAN 1H (HORIZONTAL):8V (VERTICAL);
3. THE SUBGRADE AT THE BASE OF THE ULTRABLOCK BLOCKS SHALL CONSIST OF DENSE NATIVE SOIL OR LEVELING CRUSHED ROCK PLACED ON DENSE SOIL;
4. NO EXCAVATION SHALL BE MADE UNTIL BLOCKS ARE AVAILABLE ON SITE;
5. THE WIDTH OF UNSUPPORTED CUT FACE FOR BLOCK PLACEMENT SHALL BE LIMITED TO NO MORE THAN ABOUT 10 FEET AT ANY GIVEN TIME;
6. BLOCKS SHALL BE PLACED IMMEDIATELY AFTER THE CUT IS MADE, OTHERWISE THE CUT FACE SHALL BE BUTTRESSED WITH ON-SITE SOILS UNTIL THE BLOCKS CAN BE PLACED;
7. ANY VOIDS BEHIND BLOCKS SHALL BE BACKFILLED WITH GRAVEL IMMEDIATELY AFTER THE BLOCK WALL ARE INSTALLED; AND
8. PANGEO SHALL PROVIDE FULL TIME OBSERVATION DURING BLOCK WALL INSTALLATION.

GEOTECHNICAL ENGINEER TO REVIEW THESE PLANS AND COORDINATE WITH CONTRACTOR ON ALL EXCAVATION, FOUNDATION DRAINAGE, RETAINING WALLS, SHEET PILING, SHORING, ULTRABLOCK, BACKFILLING AND OTHER EARTHWORK NECESSARY TO CONSTRUCT THIS PROJECT.

THIS PROJECT REQUIRES STAGED FOUNDATION CONSTRUCTION. CONTRACTOR TO WORK WITH GEOTECHNICAL ENGINEER TO DETERMINE THE APPROPRIATE LIMITS AND PROCESSES FOR SUCCESSIVE STAGES OF THE CONSTRUCTION.

CONTRACTOR TO COORDINATE WITH ARCHITECT & STRUCTURAL ENGINEER ON ALL PENETRATIONS THROUGH RETAINING WALLS, PROVIDING SLEEVES WHERE SHOWN OR REQUIRED.

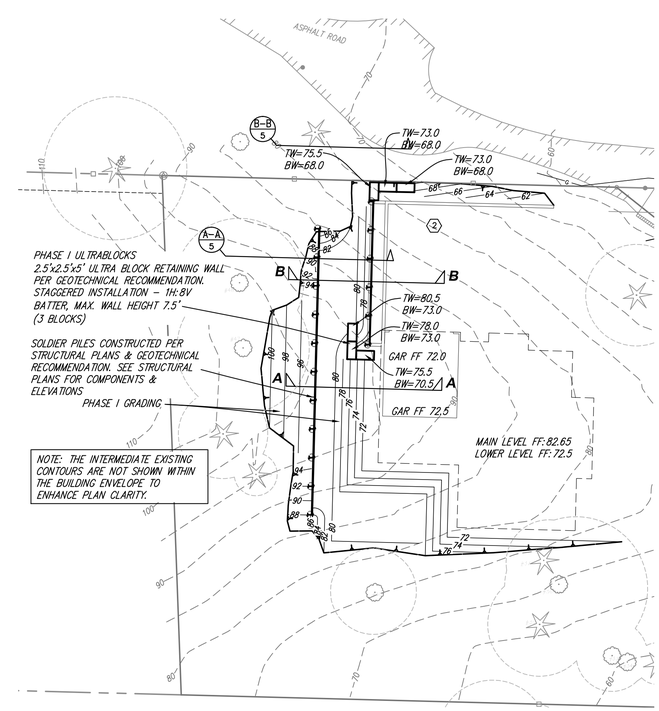

GRAPHIC SCALE

20 0 10 20

SCALE: 1" = 20'

PROJECT CESCL

MICHAEL H. XUE, PE, CESCL
PANGEO, INC.
(206) 262-0374 (O)
(206) 491-0081 (C)

APPROVED:

CITY OF MERCER ISLAND DEVELOPMENT SERVICES GROUP *Date*

CALL 3 WORKING DAYS BEFORE YOU DIG
811
UTILITIES UNDERGROUND LOCATION CENTER
(ID,MT,ND,OR,WA)
SAFETY PRECAUTION SHALL BE IMPLEMENTED BY CONTRACTORS AT ALL TIMES/WILL BE ACCORDANCE WITH CURRENT OSHA STANDARDS
ELECTRIC - RED TELECAT - ORANGE
SEWER - GREEN PROPOSED - WHITE
GAS/OIL - YELLOW WATER - BLUE
SURVEY - PINK

STAMP NOT VALID UNLESS SIGNED AND DATED

NOTES	DATE	CHKD BY	DWN BY
PER STRUCTURAL REVISION	1-29-16	KAL	KAL
PER ARCH/STRUCT/GEOTECH	3-9-16	KAL	KAL
ADD EXCAVATION PLAN: SHEET 5	3-25-16	KAL	KAL
PER CITY COMMENTS	5-25-16	KAL	KAL
UPDATED PER STREAM BUFFER	6-14-17	KAL	KAL
PER CITY COMMENTS	10-10-17	KAL	KAL
PER CITY COMMENTS	8-3-18	KAL	KAL
PER CITY COMMENTS	1-22-19	KAL	KAL

LITCHFIELD ENGINEERING
12840 81ST AVENUE NE
Kirkland, WA 98034
Tel (425) 821-3038 Fax (425) 821-5729

Copyright © 2000 Litchfield Engineering, Inc. All rights reserved.

TEMPORARY EXCAVATION PLAN
BARCELLO HOMES S.F.R.
4634 EAST MERCER WAY

BOGDAN MAKSIMCHUK
P.O. BOX 1733
AUBURN, WA. 98071

SHEET
5 of **6**

JOB No.

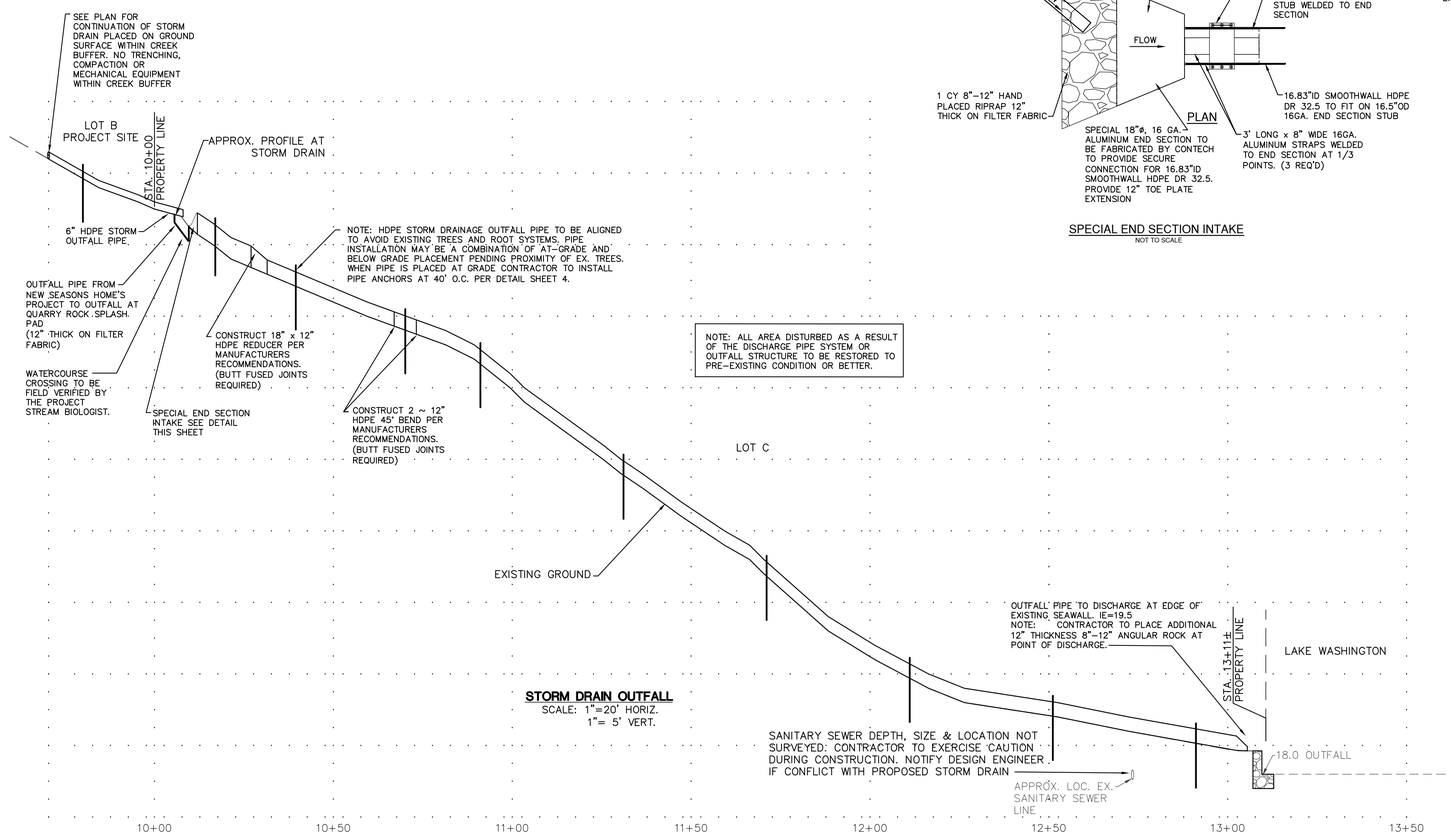

STORM DRAIN OUTFALL
SCALE: 1"=20' HORIZ.
1"= 5' VERT.

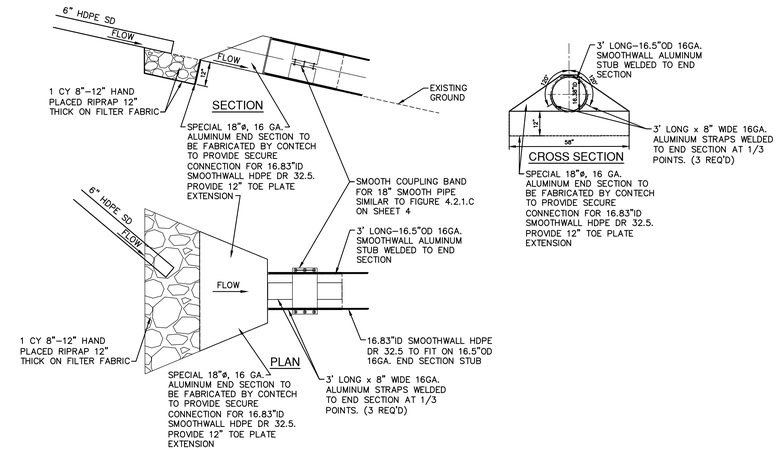

SPECIAL END SECTION INTAKE
NOT TO SCALE

DWN BY	CHKD BY	DATE	NOTES
KAL	KAL	5-25-16	ADD PROFILE: SHEET 6
KAL	KAL	08-03-18	PER CITY COMMENTS
KAL	KAL	1-22-19	PER CITY COMMENTS
KAL	KAL	4-16-19	PER CITY REVIEW

STAMP NOT VALID UNLESS SIGNED AND DATED

LITCHFIELD ENGINEERING
12840 81ST AVENUE NE
Kirkland, WA 98034
Tel (425) 821-5038 Fax (425) 821-5729

Copyright © 2000 Litchfield Engineering, Inc. All rights reserved.

STORM DRAIN OUTFALL PROFILE
BARCELLO HOMES S.F.R.
4634 EAST MERCER WAY
BOGDAN MAKSIMCHUK
P.O. BOX 1733
AUBURN, WA. 98071

APPROVED: _____
CITY OF MERCER ISLAND DEVELOPMENT SERVICES GROUP Date

JOB No.