PROJECT INFORMATION

ZONING DTSTRICT	R-9.6
PROPERTY OWNER	CHEN NICK MING HUANG + MEI-SH
PARCEL NUMBER	545900-0255
LOT AREA	10,146 S.F.
OCCUPANCY CLASSIFICATION	R-3 / U
CONSTRUCTION TYPE	V-B

LOT COVERAGE

MAX. LOT COVERAGE (LOT SLOPE < 15%)	40 %
ROOF	3,698 S.F.
DRIVEWAY & WALKWAY	360 S.F.
TOTAL IMPERVIOUS SURFACE AREA	4,058 S.F.
LOT COVERAGE	39.9 % (OK!)

FLOOR AREA SUMMARIES

PRIMARY RESIDENCE	
MAIN FLOOR	1,786 SF
UPPER FLOOR	1,492 SF
FINISHED FLOOR AREA	3,278 SF
ADU	
MAIN FLOOR	500 SF
TOTAL FINISHED FLOOR AREA	3,778 S.F.

GROSS FLOOR AREA (GFA)

MAX. GROSS FLOOR AREA w/ ADU	45 % OR 4,500 S.F.
FINISHED FLOOR AREA	3,778 S.F.
GARAGE	514 S.F.
OVER 16' HIGH CEILING FLOOR AREA	182 S.F.
TOTAL ABOVE GROUND FLOOR AREA	4,474 S.F.
PROPOSED GFA	44.1 % (OK!)
FRONT PORCH	266 S.F.

HARDSCAPE

MAX. HARDSCAPE AREA (9% OF LOT AREA)	913 S.F.
WALKWAY	53 S.F.
TOTAL HARDSCAPE AREA	53 S.F. (OK!)

AVERAGE BUILDING ELEVATION

#	WALL LENGTH	EXIST. ELEVATION
A	10.0	203.8
B	15.0	203.8
C	23.0	203.8
D	25.5	203.6
E	5.1	203.6
F	19.5	203.6
G	6.1	203.6
H	21.0	203.4
I	21.0	203.4
J	12.0	203.4
K	37.0	203.4
L	41.0	203.6
M	15.1	203.8
N	3.3	203.8
O	8.9	203.8
P	5.3	203.8
A.B.E.		

A.B.E. = (W1 x E1 + W2 x E2 + ...) / (W1 + W2 +...) = 203.6

MAX. STRUCTURAL HT. ALLOWED =
203.6 + 30 = 233.6' (SEE SHEET A3, A4)

LEGAL DESCRIPTION

LOT 13, BLOCK 11, MECERDALE NO 2, ACCORDING TO THE PLAT THEREOF RECORDED IN VOLUME 60 OF PLATS, PAGE 28, IN KING COUNTY, WASHINGTON.

CODE COMPLIANCE

2015 INTERNATIONAL RESIDENTIAL CODE
2015 INTERNATIONAL MECHANICAL CODE
2015 UNIFORM PLUMBING CODE
2015 INTERNATIONAL FIRE CODE
2015 NATIONAL ELECTRICAL CODE
2015 WASHINGTON STATE ENERGY CODE

(ALL CODES ABOVE INCLUDE WASHINGTON STATEWIDE AMENDMENTS)

PRIMARY UNIT

Simple Heating System Size: Washington State

This heating system sizing calculator is based on the Prescriptive Requirements of the 2015 Washington State Energy Code (WSEC) and ACCA Manuals J and S. This calculator will calculate heating loads only. ACCA procedures for sizing cooling systems should be used to determine cooling loads.

Please fill out all of the green drop-downs and boxes that are applicable to your project. As you make selections in the drop-downs for each section, some values will be calculated for you. If you do not see the selection you need in the drop-down options, please call the WSU Energy Extension Program at (360) 956-2042 for assistance.

Project Information	*Contact Information*
Chen Residence	Chaohua Chang
3869 80th Ave SE	13301 SE 79th PL UNIT A205
Mercer Island, WA 98040	Newcastle WA 98059

Heating System Type: (●) All Other Systems ( ) Heat Pump

To see detailed instructions for each section, place your cursor on the word "Instructions".

Design Temperature
Instructions: Mercer Island
Design Temperature Difference (ΔT) 45
ΔT = Indoor (70 degrees) - Outdoor Design Temp

Area of Building
Conditioned Floor Area
Instructions — Conditioned Floor Area (sq ft): 3,278
Average Ceiling Height
Instructions — Average Ceiling Height (ft): 9.5 — Conditioned Volume 31,141

	U-Factor	X	Area	=	UA
Glazing and Doors (Instructions: U-0.28)	0.280		506		141.68
Skylights (Instructions)	0.50		16		8.00
Insulation					
Attic (Instructions: R-49)	0.026		2,252		58.55
Single Rafter or Joist Vaulted Ceilings (Instructions: No Vaulted Ceilings in this project.)	---				----------
Above Grade Walls *(see Figure 1)* (Instructions: R-21 INT plus R-4 ci)	0.043		3,271		140.65
Floors (Instructions: R-38)	0.025		1,882		42.05
Below Grade Walls *(see Figure 1)* (Instructions: No Below Grade Walls in this project.)	0.028				----------
Slab Below Grade *(see Figure 1)* (Instructions: No Slab Below Grade in this project.)	F-Factor 0.303		Length		UA ---
Slab on Grade *(see Figure 1)* (Instructions: No Slab on Grade in this project.)	F-Factor ---		Length		UA ----------

Location of Ducts
Instructions: Unconditioned Space
Duct Leakage Coefficient 1.10

Figure 1.

Sum of UA	390.94	
Envelope Heat Load *Sum of UA X ΔT*	17,592	Btu / Hour
Air Leakage Heat Load *Volume X 0.6 X ΔT X .018*	15,135	Btu / Hour
Building Design Heat Load *Air Leakage + Envelope Heat Loss*	32,727	Btu / Hour
Building and Duct Heat Load *Ducts in unconditioned space: Sum of Building Heat Loss X 1.10* *Ducts in conditioned space: Sum of Building Heat Loss X 1*	35,999	Btu / Hour
Maximum Heat Equipment Output *Building and Duct Heat Loss X 1.40 for Forced Air Furnace* *Building and Duct Heat Loss X 1.25 for Heat Pump*	50,399	Btu / Hour

(07/01/13)

ADU UNIT

Simple Heating System Size: Washington State

This heating system sizing calculator is based on the Prescriptive Requirements of the 2015 Washington State Energy Code (WSEC) and ACCA Manuals J and S. This calculator will calculate heating loads only. ACCA procedures for sizing cooling systems should be used to determine cooling loads.

Please fill out all of the green drop-downs and boxes that are applicable to your project. As you make selections in the drop-downs for each section, some values will be calculated for you. If you do not see the selection you need in the drop-down options, please call the WSU Energy Extension Program at (360) 956-2042 for assistance.

Project Information	*Contact Information*
Chen Residence	Chaohua Chang
3869 80th Ave SE	13301 SE 79th PL UNIT A205
Mercer Island, WA 98040	Newcastle WA 98059

Heating System Type: (●) All Other Systems ( ) Heat Pump

To see detailed instructions for each section, place your cursor on the word "Instructions".

Design Temperature
Instructions: Mercer Island
Design Temperature Difference (ΔT) 45
ΔT = Indoor (70 degrees) - Outdoor Design Temp

Area of Building
Conditioned Floor Area
Instructions — Conditioned Floor Area (sq ft): 473
Average Ceiling Height
Instructions — Average Ceiling Height (ft): 10.0 — Conditioned Volume 4,730

	U-Factor	X	Area	=	UA
Glazing and Doors (Instructions: U-0.28)	0.280		84		23.52
Skylights (Instructions)	0.50				---
Insulation					
Attic (Instructions: R-49)	0.026		52		1.35
Single Rafter or Joist Vaulted Ceilings (Instructions: No Vaulted Ceilings in this project.)	---				----------
Above Grade Walls *(see Figure 1)* (Instructions: R-21 INT plus R-4 ci)	0.043		366		15.74
Floors (Instructions: R-38)	0.025		473		11.83
Below Grade Walls *(see Figure 1)* (Instructions: No Below Grade Walls in this project.)	0.028				----------
Slab Below Grade *(see Figure 1)* (Instructions: No Slab Below Grade in this project.)	F-Factor 0.303		Length		UA ---
Slab on Grade *(see Figure 1)* (Instructions: No Slab on Grade in this project.)	F-Factor ---		Length		UA ----------

Location of Ducts
Instructions: Unconditioned Space
Duct Leakage Coefficient 1.10

Figure 1.

Sum of UA	52.44	
Envelope Heat Load *Sum of UA X ΔT*	2,360	Btu / Hour
Air Leakage Heat Load *Volume X 0.6 X ΔT X .018*	2,299	Btu / Hour
Building Design Heat Load *Air Leakage + Envelope Heat Loss*	4,658	Btu / Hour
Building and Duct Heat Load *Ducts in unconditioned space: Sum of Building Heat Loss X 1.10* *Ducts in conditioned space: Sum of Building Heat Loss X 1*	5,124	Btu / Hour
Maximum Heat Equipment Output *Building and Duct Heat Loss X 1.40 for Forced Air Furnace* *Building and Duct Heat Loss X 1.25 for Heat Pump*	7,174	Btu / Hour

(07/01/13)

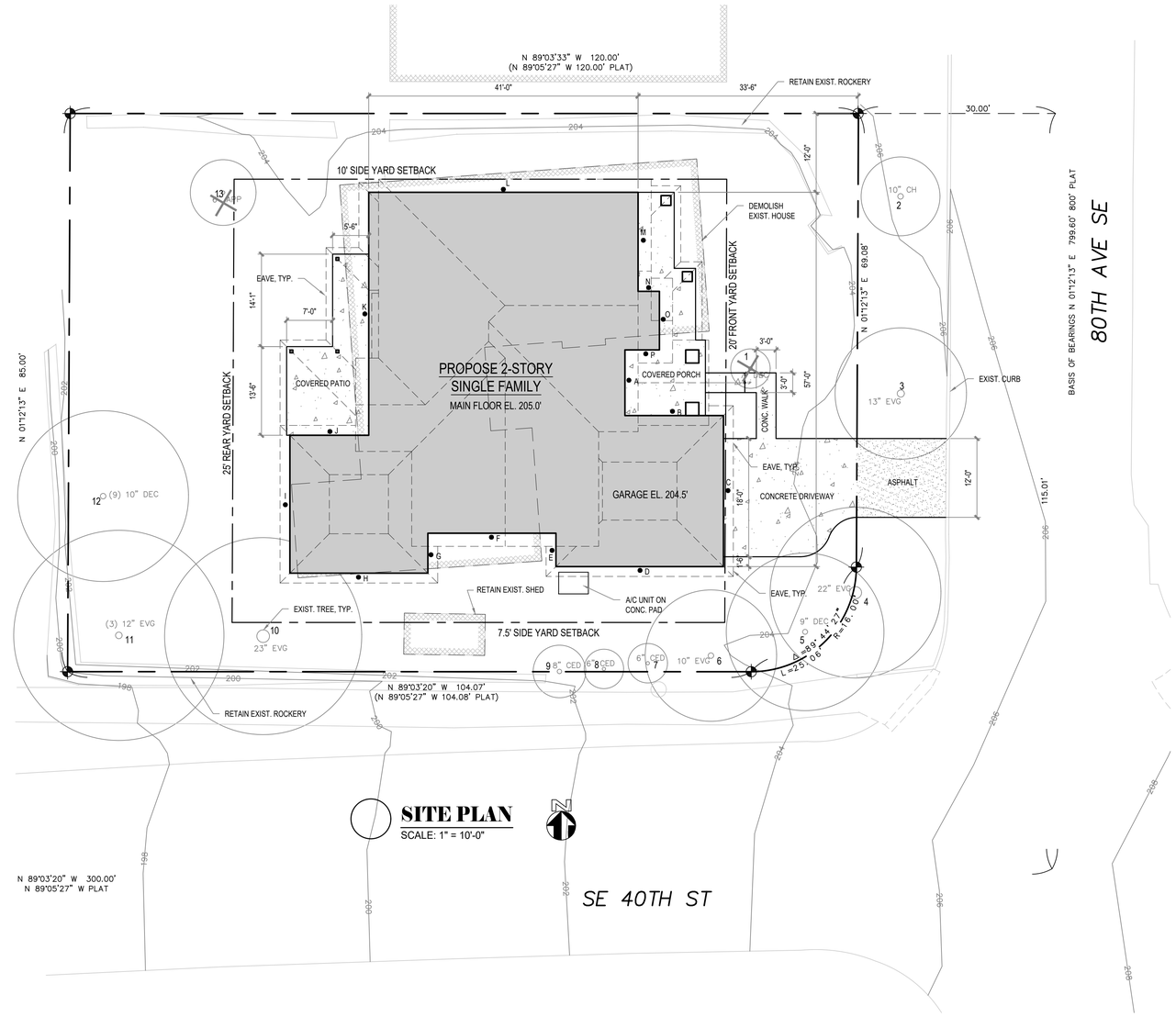

SITE PLAN
SCALE: 1" = 10'-0"

SEE CIVIL PLANS FOR STORM AND SANITARY SEWER CONNETIONS, AND ANY R-O-W WORKS

ABBREVIATIONS

BLK'G	BLOCKING	HORIZ	HORIZONTAL
℄	CENTER LINE	MAX	MAXIMUM
CLR	CLEAR	MFR	MANUFACTURER
CONT	CONTINUOUS	MIN	MINIMUM
CS	CASEMENT WINDOW	o/	OVER
DBL	DOUBLE	O.C.	ON CENTER
DS	DOWNSPOUT	SD	SMOKE DETECTOR
EL	ELEVATION	SG	SAFETY GLASS
EQ	EQUAL	SF	SQUARE FEET
EXIST	EXISTING	SIM	SIMILAR
FTG	FOOTING	SLD	SLIDING WINDOW
FX	FIXED WINDOW	TYP	TYPICAL
HDR	HEADER	UNO	UNLESS NOTED OTHERWISE
HDWD	HARDWOOD	w/	WITH
HGR	HANGER		

SITE PLAN NOTES:

1. ALL UTILITIES SERVING THE SITE IS TO BE UNDERGROUNDED.
2. THE ADDRESS IS TO BE PLACED IN A POSITION THAT IS PLAINLY LEGIBLE AND VISIBLE FROM THE STREET OR ROAD FRONTING THE PROPERTY.
3. ALL JAPANESE KNOTWEED (POLYGONUM CUSPIDATUM) AND REGULATED CLASS A, REGULATED CLASS B, AND REGULATED CLASS C WEEDS IDENTIFIED ON THE KING COUNTY NOXIOUS WEED LIST, AS AMENDED, SHALL BE REMOVED FROM THE PROPERTY.

CHC ARCHITECTS
13301 SE 79th PL Unit A205
NEWCASTLE WA 98059
(M) 425.785.3992
(O) 425.988.3618
chcarch@gmail.com

8666 REGISTERED ARCHITECT CHAOHUA CHANG STATE OF WASHINGTON

CHEN RESIDENCE
3869 80TH AVE SE MERCER ISLAND WA 98040

NUMBER	DATE	DESCRIPTION OF REVISIONS
	11-10-2019	PERMIT PLANS
	03-17-2020	RESPONSE TO REVIEW COMMENTS
	08-06-2020	RESPONSE TO REVIEW COMMENTS

SHEET TITLE
SITE PLAN

JOB NUMBER

SHEET NUMBER
A0

CITY STAMP

PLAN NOTES:

1. USE CONVENTIONAL FRAMING AND SHEATHING U.N.O.
2. ALL EXTERIOR WALLS TO BE 2x6 FRAMING U.N.O.
3. ALL INTERIOR WALLS TO BE 2x4 FRAMING U.N.O.
4. ALL DOOR JAMBS TO BE SET OFF WALLS 6" TYP. U.N.O.
5. ALL DIMENSIONS ARE TO FACE OF FRAMING U.N.O.
6. ALL WINDOW HEADS TO BE 8'-0" TO FINISH FLOOR AT THIS FLOOR, U.N.O.
7. ALL EXHAUST FANS ARE INTERMITTENT OPERATION MODE (U.N.O.) AND TO VENTED TO OUTSIDE.
8. DOOR HT. AT THIS FLOOR IS 8'-0", TYP.
9. ALL SMOKE DETECTORS MUST BE PROVIDED w/ PRIMARY POWER FROM BUILDING WIRING, PROVIDED w/ BATTERY BACKUP, AND BE INTERCONNECTED.
10. ESCAPE (EGRESS) WINDOW MUST HAVE A CLEAR OPENABLE AREA OF 5.7 S.F. w/ A MINIMUM NET CLEAR HEIGHT OF 24" AND WIDTH DIMENSION OF 20". THE SILL HEIGHT MUST NOT BE MORE THAN 44" ABOVE THE FLOOR.
11. ALL EXTERIOR COLUMNS, BEAMS, AND JOISTS THAT ARE EXPOSED TO THE WEATHER MUST BE PRESSURE-TREATED.
12. ALL NEW FENESTRATION ARE NFRC CERTIFIED.

ENERGY NOTES:

PER WSEC R402.4, THE BUILDING THERMAL ENVELOPE SHALL BE CONSTRUCTED TO LIMIT AIR LEAKAGE. THE RESULTS OF THE TEST SHALL BE SIGNED BY THE PARTY CONDUCTING THE TEST AND PROVIDED TO THE CODE OFFICIAL (R402.4.1.2).

PER WSEC R403.2.2, DUCTS, AIR HANDLERS, AND FILTER BOXES SHALL BE SEALED. PER WSEC R404.1, A MINIMUM OF 75 PERCENT OF THE LAMPS IN PERMANENTLY INSTALLED LIGHTING FIXTURES SHALL BE HIGH-EFFICACY LAMPS.

AIR LEAKAGE SHALL NOT EXCEED 5 AIR CHANGES/ HOUR AND SHALL BE TESTED AS SUCH. A WRITTEN REPORT OF THE TEST RESULTS, SHALL BE SIGNED BY THE TESTING PARTY AND PROVIDED TO THE BUILDING INSPECTOR, PRIOR TO CALL FOR FINAL INSPECTION." THE AIR LEAKAGE TEST RESULT SHALL BE DOCUMENTED ON THE FORM WHICH IS AVAILABLE ONLINE AT HTTP://WWW.ENERGY.WSU.EDU/BUILDINGEFFICIENCY/ENERGYCODE.ASPX

THE DESIGN PROFESSIONAL OR BUILDER SHALL COMPLETE AND POST AN "INSULATION CERTIFICATE FOR RESIDENTIAL CONSTRUCTION" WITHIN 3' OF THE ELECTRICAL PANEL PRIOR TO FINAL INSPECTION. A SINGLE BLANK FORM SHOULD BE INCLUDED ON THE PLAN DRAWINGS. THESE ARE AVAILABLE ONLINE AT HTTP://WWW.ENERGY.WSU.EDU/DOCUMENTS/WSEC-2015-AVERY-6878_4_PER_SHEET.PDF

WINDOW AND DOOR HEADERS SHALL BE INSULATED WITH A MINIMUM OF R-10 INSULATION.

ALL NEW FENESTRATION ARE NFRC CERTIFIED.

CRAWL SPACE VENTILATION

TYPICAL SCREENED 14"x 8" C.S. VENT - MIN. w/ .58 SQ. FT. OF NET FREE AREA EACH

(CRAWL SPACE = 2155 S.F.
--> 2155 / 150 = 14.36
--> 14.36 / 0 .58 = 25 VENTS REQUIRED

NOTE: LOCATE VENTS BETWEEN JOISTS AND AVOID CONFLICT W/ HOLDOWNS

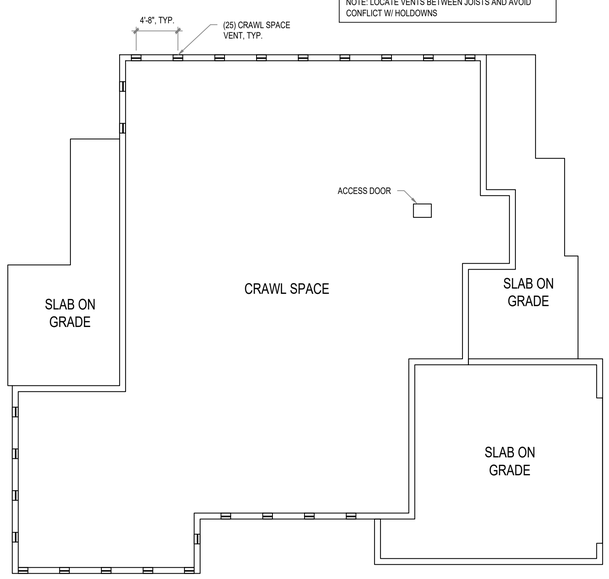

CRAWL SPACE PLAN
SCALE: 1/8" = 1'=0"

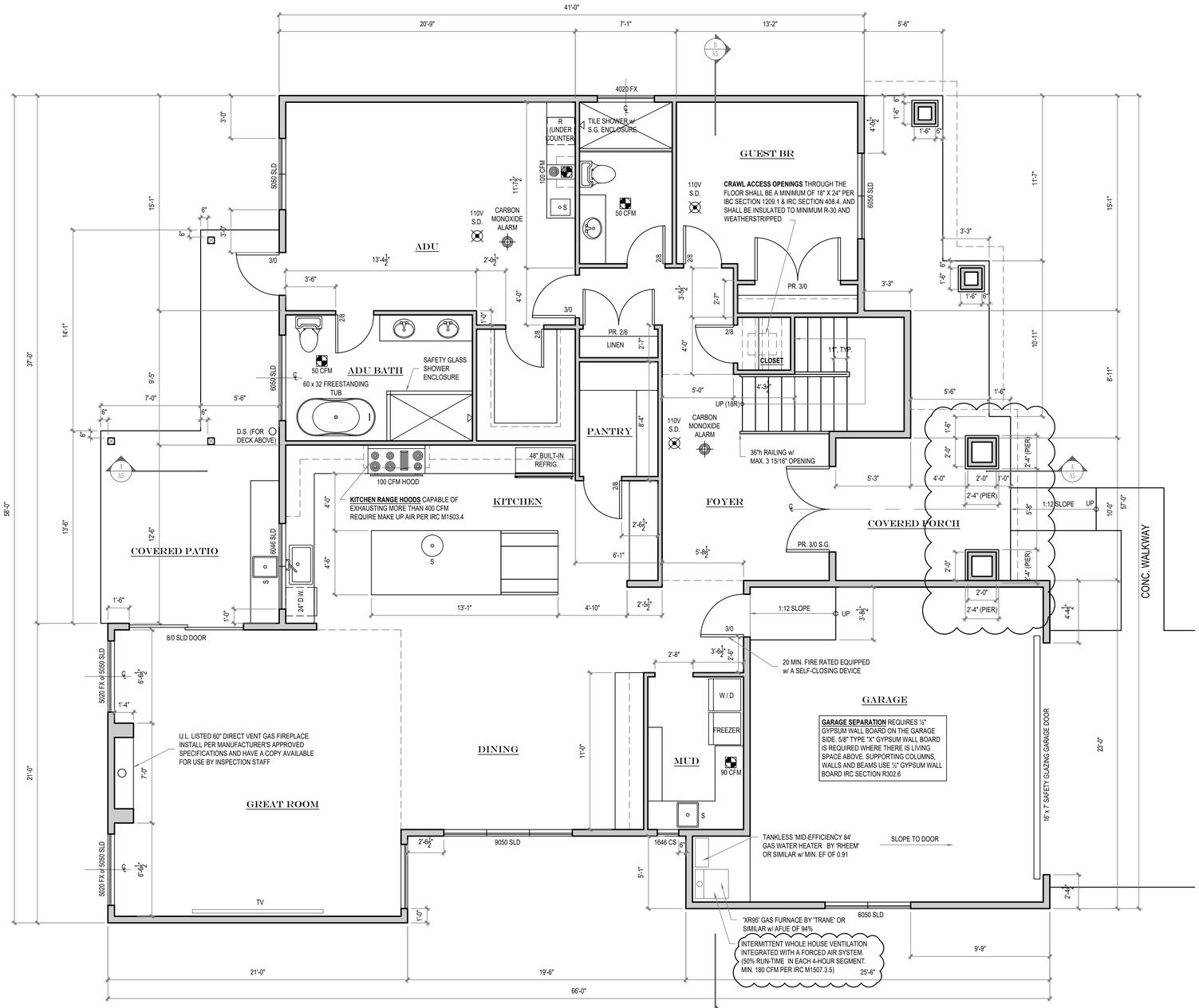

MAIN FLOOR PLAN
SCALE: 1/4" = 1'-0"

CHC ARCHITECTS
13301 SE 79th PL Unit A205
NEWCASTLE WA 98059
(M) 425.785.3992
(O) 425.988.3618
chcarch@gmail.com

8666 REGISTERED ARCHITECT CHAOHUA CHANG STATE OF WASHINGTON

CHEN RESIDENCE

3869 80TH AVE SE MERCER ISLAND WA 98040

NUMBER	DATE	DESCRIPTION OF REVISIONS
	11-10-2019	PERMIT PLANS
	03-17-2020	RESPONSE TO REVIEW COMMENTS
	08-06-2020	RESPONSE TO REVIEW COMMENTS

SHEET TITLE
MAIN FLOOR PLAN

JOB NUMBER

SHEET NUMBER
A1

CITY STAMP

ROOF VENTILATION

ATTIC AREA = 2735 S.F.
REQUIRED VENTILATION = 2735 / 300 = 9.11 S.F. (1312 IN^2)
EAVE VENT: MIN. 50% = 656 IN^2
PROPOSED EAVE VENT ((3) Ø1-3/4" HOLES ON EA. EAVE BLOCKING): 3.6 IN^2 / L.F. x 321' = 1156 IN^2 (SEE SHEET A5 FOR EAVE BLOCKING)

OF ROOF VENTS: 656 IN^2 / 8"Ø (50 IN^2) = 14

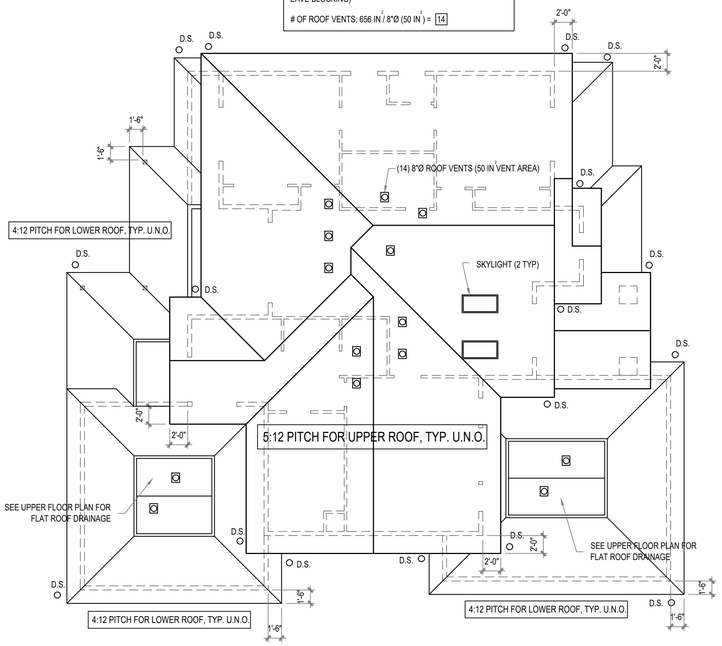

ROOF PLAN
SCALE: 1/8" = 1'-0"

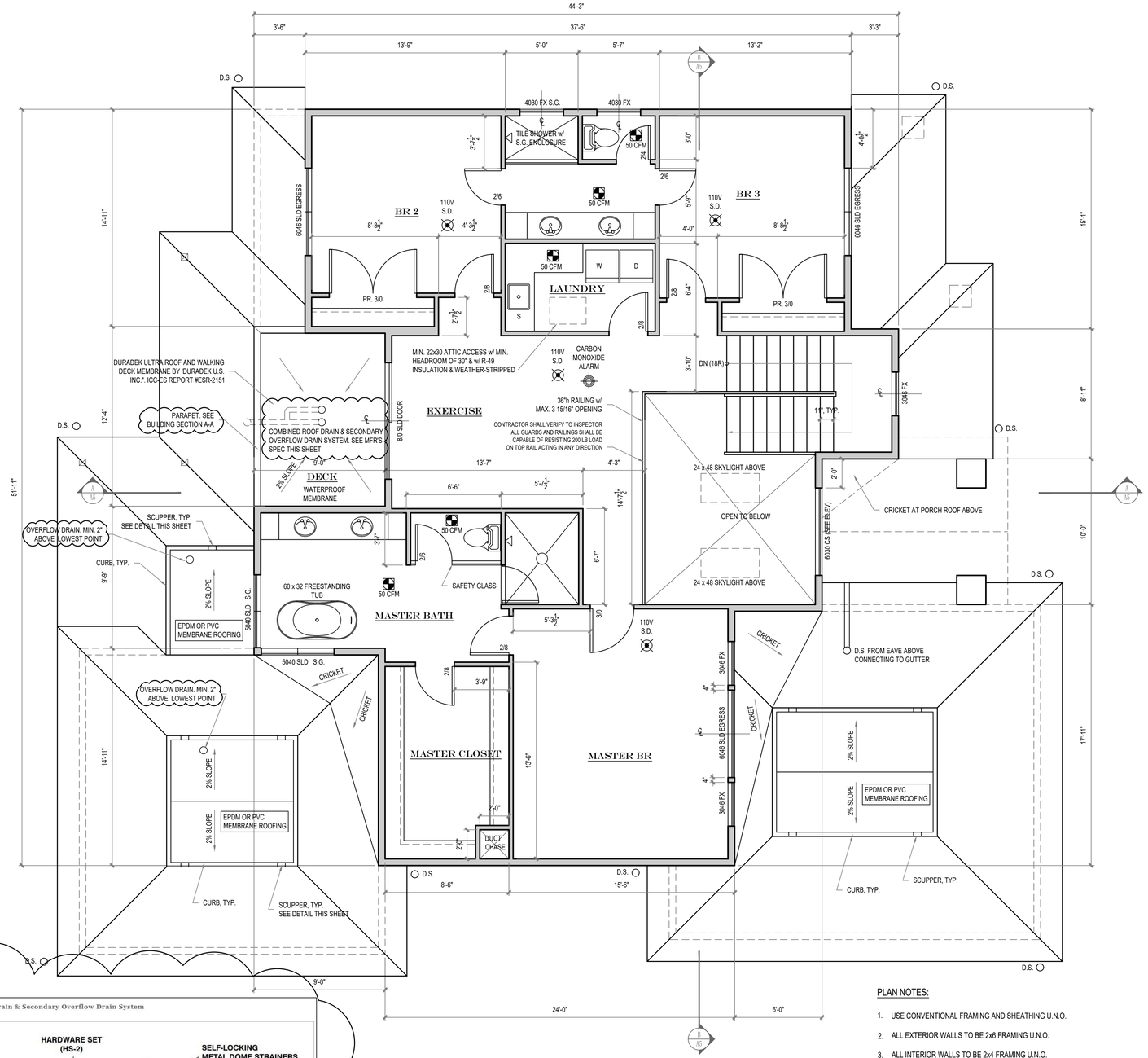

UPPER FLOOR PLAN
SCALE: 1/4" = 1'-0"

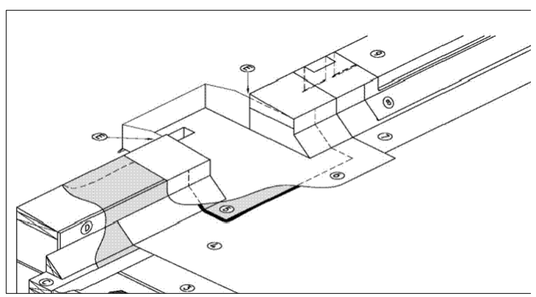

(4) Primary Membrane and Membrane Protection
(5) Metal Scupper with Hopper
The outside face of scupper to be 37.7mm (1½") lower than the box height with a 12.7mm (½") drip edge. Installed in a thin bed of compatible mastic. Interface between outside wall and scupper should be caulked with appropriate sealant. Installed when wall finish is complete prior to completion of roofing or sheet metal (e.g.: re-roofing).
(6) Scupper Membrane Flashing
(7) Membrane Flashing
(8) Base Metal Flashing
Mechanically fastened. Optional on flexible membrane systems. Required on assemblies using gravel ballast filter mats.
(9) Metal Cap Flashing
Fasten with continuous concealed clip-type fasteners or cladding screws evenly spaced between seams. Flashing 8 and 9 may be one piece.

(C) Wood Blocking
(D) Acceptable Wall Surface - Plywood
(E) Wall Finish
Interface between outside wall and scupper to be caulked with appropriate sealant. Installed by trade responsible for outside wall finish if roofing and metal flashing has been completed prior to exterior wall finish.

SCUPPER DETAIL
NOT TO SCALE

COMBINED ROOF DRAIN & SECONDARY OVERFLOW DRAIN SYSTEM
NOT TO SCALE

PLAN NOTES:

1. USE CONVENTIONAL FRAMING AND SHEATHING U.N.O.
2. ALL EXTERIOR WALLS TO BE 2x6 FRAMING U.N.O.
3. ALL INTERIOR WALLS TO BE 2x4 FRAMING U.N.O.
4. ALL DOOR JAMBS TO BE SET OFF WALLS 6" TYP. U.N.O.
5. ALL DIMENSIONS ARE TO FACE OF FRAMING U.N.O.
6. ALL WINDOW HEADS TO BE 6'-8" TO FINISH FLOOR AT THIS FLOOR, U.N.O.
7. ALL EXHAUST FANS ARE INTERMITTENT OPERATION MODE (U.N.O.) AND TO VENTED TO OUTSIDE.
8. DOOR HT. AT THIS FLOOR IS 6'-8", TYP.
9. ALL SMOKE DETECTORS MUST BE PROVIDED w/ PRIMARY POWER FROM BUILDING WIRING, PROVIDED w/ BATTERY BACKUP, AND BE INTERCONNECTED.
10. ESCAPE (EGRESS) WINDOW MUST HAVE A CLEAR OPENABLE AREA OF 5.7 S.F. w/ A MINIMUM NET CLEAR HEIGHT OF 24" AND WIDTH DIMENSION OF 20". THE SILL HEIGHT MUST NOT BE MORE THAN 44" ABOVE THE FLOOR.
11. ALL EXTERIOR COLUMNS, BEAMS, AND JOISTS THAT ARE EXPOSED TO THE WEATHER MUST BE PRESSURE-TREATED.
12. ALL NEW FENESTRATION ARE NFRC CERTIFIED.

CHC ARCHITECTS
13301 SE 79th PL Unit A205
NEWCASTLE WA 98059
(M) 425.785.3992
(O) 425.988.3618
chcarch@gmail.com

8666 REGISTERED ARCHITECT
CHAOHUA CHANG
STATE OF WASHINGTON

CHEN RESIDENCE
3869 80TH AVE SE MERCER ISLAND WA 98040

NUMBER	DATE	DESCRIPTION OF REVISIONS
	11-10-2019	PERMIT PLANS
	03-17-2020	RESPONSE TO REVIEW COMMENTS
	08-06-2020	RESPONSE TO REVIEW COMMENTS

SHEET TITLE
UPPER FLOOR PLAN

JOB NUMBER

SHEET NUMBER
A2

CITY STAMP

FIREBLOCKING SHALL BE PROVIDED IN WOOD-FRAME CONSTRUCTION IN THE FOLLOWING LOCATIONS:

1. IN CONCEALED SPACES OF STUD WALLS AND PARTITIONS, INCLUDING FURRED SPACES AND PARALLEL ROWS OF STUDS OR STAGGERED STUDS, AS FOLLOWS:
1.1. VERTICALLY AT THE CEILING AND FLOOR LEVELS.
1.2. HORIZONTALLY AT INTERVALS NOT EXCEEDING 10 FEET (3048 MM).

2. AT ALL INTERCONNECTIONS BETWEEN CONCEALED VERTICAL AND HORIZONTAL SPACES SUCH AS OCCUR AT SOFFITS, DROP CEILINGS AND COVE CEILINGS.

3. IN CONCEALED SPACES BETWEEN STAIR STRINGERS AT THE TOP AND BOTTOM OF THE RUN. ENCLOSED SPACES UNDER STAIRS SHALL COMPLY WITH SECTION R302.7.

4. AT OPENINGS AROUND VENTS, PIPES, DUCTS, CABLES AND WIRES AT CEILING AND FLOOR LEVEL, WITH AN APPROVED MATERIAL TO RESIST THE FREE PASSAGE OF FLAME AND PRODUCTS OF COMBUSTION. THE MATERIAL FILLING THIS ANNULAR SPACE SHALL NOT BE REQUIRED TO MEET THE ASTM E 136 REQUIREMENTS.

Prescriptive Energy Code Compliance for All Climate Zones in Washington

Project Information | *Contact Information*

This project will use the requirements of the Prescriptive Path below and incorporate the the minimum values listed. In addition, based on the size of the structure, the appropriate number of additional credits are checked as chosen by the permit applicant.

Authorized Representative _____ Date _____

All Climate Zones		
	R-Value[a]	U-Factor[a]
Fenestration U-Factor[b]	n/a	0.28
Skylight U-Factor	n/a	0.50
Glazed Fenestration SHGC[b,e]	n/a	n/a
Ceiling[k]	49[j]	0.026
Wood Frame Wall[g,m,n]	21 int	0.056
Mass Wall R-Value[i]	21/21[h]	0.056
Floor	38	0.029
Below Grade Wall[c,m]	10/15/21 int + TB	0.042
Slab[d] R-Value & Depth		n/a

R-10 perimeter and under entire slab

*Table R402.1.1 and Table R402.1.3 Footnotes included on Page 2.

Each dwelling unit in a residential building shall comply with sufficient options from Table R406.2 so as to achieve the following minimum number of credits:

☐ **1. Small Dwelling Unit: 1.5 credits**
Dwelling units less than 1500 square feet in conditioned floor area with less than 300 square feet of fenestration area. Additions to existing building that are greater than 500 square feet of heated floor area but less than 1500 square feet.

☑ **2. Medium Dwelling Unit: 3.5 credits**
All dwelling units that are not included in #1 or #3. **Exception:** Dwelling units serving R-2 occupancies shall require 2.5 credits.

☐ **3. Large Dwelling Unit: 4.5 credits**
Dwelling units exceeding 5000 square feet of conditioned floor area.

☐ **4. Additions less than 500 square feet: .5 credits**

Table R406.2 Summary

Option	Description	Credit(s)		
1a	Efficient Building Envelope 1a	0.5	☑	0.5
1b	Efficient Building Envelope 1b	1.0	☐	
1c	Efficient Building Envelope 1c	2.0	☐	
1d	Efficient Building Envelope 1d	0.5	☐	
2a	Air Leakage Control and Efficient Ventilation 2a	0.5	☐	
2b	Air Leakage Control and Efficient Ventilation 2b	1.0	☐	
2c	Air Leakage Control and Efficient Ventilation 2c	1.5	☐	
3a	High Efficiency HVAC 3a	1.0	☑	1.0
3b	High Efficiency HVAC 3b	1.0	☐	
3c	High Efficiency HVAC 3c	1.5	☐	
3d	High Efficiency HVAC 3d	1.0	☐	
4	High Efficiency HVAC Distribution System	1.0	☐	
5a	Efficient Water Heating 5a	0.5	☑	0.5
5b	Efficient Water Heating 5b	1.0	☐	
5c	Efficient Water Heating 5c	1.5	☑	1.5
5d	Efficient Water Heating 5d	0.5	☐	
6	Renewable Electric Energy	0.5	*1200 kwh	0.0
Total Credits				**3.50**

*Please refer to Table R406.2 for complete option descriptions

1a	EFFICIENT BUILDING ENVELOPE 1a: Prescriptive compliance is based on Table R402.1.1 with the following modifications: Vertical fenestration U = 0.28 Floor R-38 Slab on grade R-10 perimeter and under entire slab Below grade slab R-10 perimeter and under entire slab **or** Compliance based on Section R402.1.4: Reduce the Total UA by 5%.	0.5
3a	HIGH EFFICIENCY HVAC EQUIPMENT 3a: Gas, propane or oil-fired furnace with minimum AFUE of 94%, or Gas, propane or oiled-fired boiler with minimum AFUE of 92% To qualify to claim this credit, the building permit drawings shall specify the option being selected and shall specify the heating equipment type and the minimum equipment efficiency.	1.0
5a	EFFICIENT WATER HEATING 5a: All showerhead and kitchen sink faucets installed in the house shall be rated at 1.75 GPM or less. All other lavatory faucets shall be rated at 1.0 GPM or less.c To qualify to claim this credit, the building permit drawings shall specify the option being selected and shall specify the maximum flow rates for all showerheads, kitchen sink faucets, and other lavatory faucets.	0.5
5c	EFFICIENT WATER HEATING 5c: Water heating system shall include one of the following: Gas, propane or oil water heater with a minimum EF of 0.91 **or** Solar water heating supplementing a minimum standard water heater. Solar water heating will provide a rated minimum savings of 85 therms or 2000 kWh based on the Solar Rating and Certification Corporation (SRCC) Annual Performance of OG-300 Certified Solar Water Heating Systems. **or** Electric heat pump water heater with a minimum EF of 2.0 and meeting the standards of NEEA's Northern Climate Specifications for Heat Pump Water Heaters. To qualify to claim this credit, the building permit drawings shall specify the option being selected and shall specify the water heater equipment type and the minimum equipment efficiency and, for solar water heating systems, the calculation of the minimum energy savings.	1.5

EAST ELEVATION
SCALE: 1/4" = 1'-0"

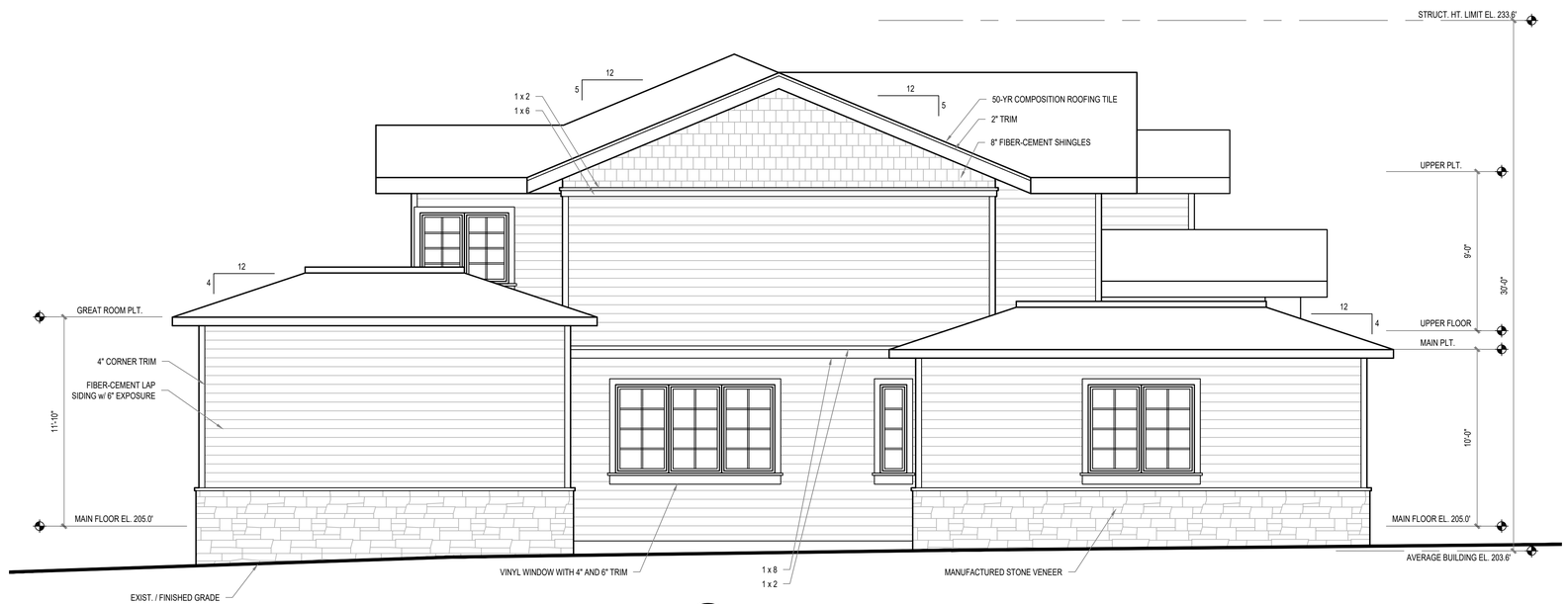

SOUTH ELEVATION
SCALE: 1/4" = 1'-0"

CHC ARCHITECTS
13301 SE 79th PL Unit A205
NEWCASTLE WA 98059
(M) 425.785.3992
(O) 425.988.3618
chcarch@gmail.com

8666 REGISTERED ARCHITECT
CHAOHUA CHANG
STATE OF WASHINGTON

CHEN RESIDENCE
3869 80TH AVE SE MERCER ISLAND WA 98040

NUMBER	DATE	DESCRIPTION OF REVISIONS
	11-10-2019	PERMIT PLANS
	03-17-2020	RESPONSE TO REVIEW COMMENTS
	08-06-2020	RESPONSE TO REVIEW COMMENTS

SHEET TITLE
BUILDING ELEVATIONS

JOB NUMBER

SHEET NUMBER
A3

CITY STAMP

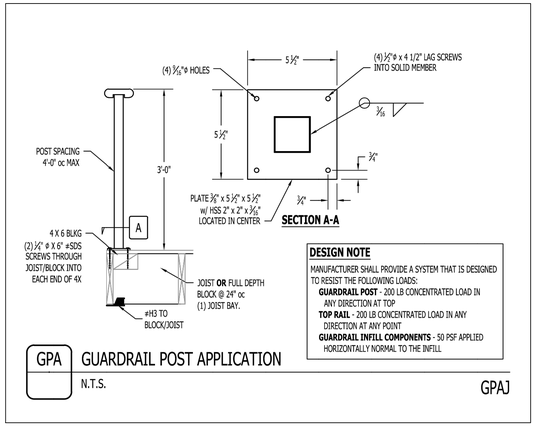

DESIGN NOTE

MANUFACTURER SHALL PROVIDE A SYSTEM THAT IS DESIGNED TO RESIST THE FOLLOWING LOADS:

GUARDRAIL POST - 200 LB CONCENTRATED LOAD IN ANY DIRECTION AT TOP

TOP RAIL - 200 LB CONCENTRATED LOAD IN ANY DIRECTION AT ANY POINT

GUARDRAIL INFILL COMPONENTS - 50 PSF APPLIED HORIZONTALLY NORMAL TO THE INFILL

GPA GUARDRAIL POST APPLICATION

N.T.S.

GPAJ

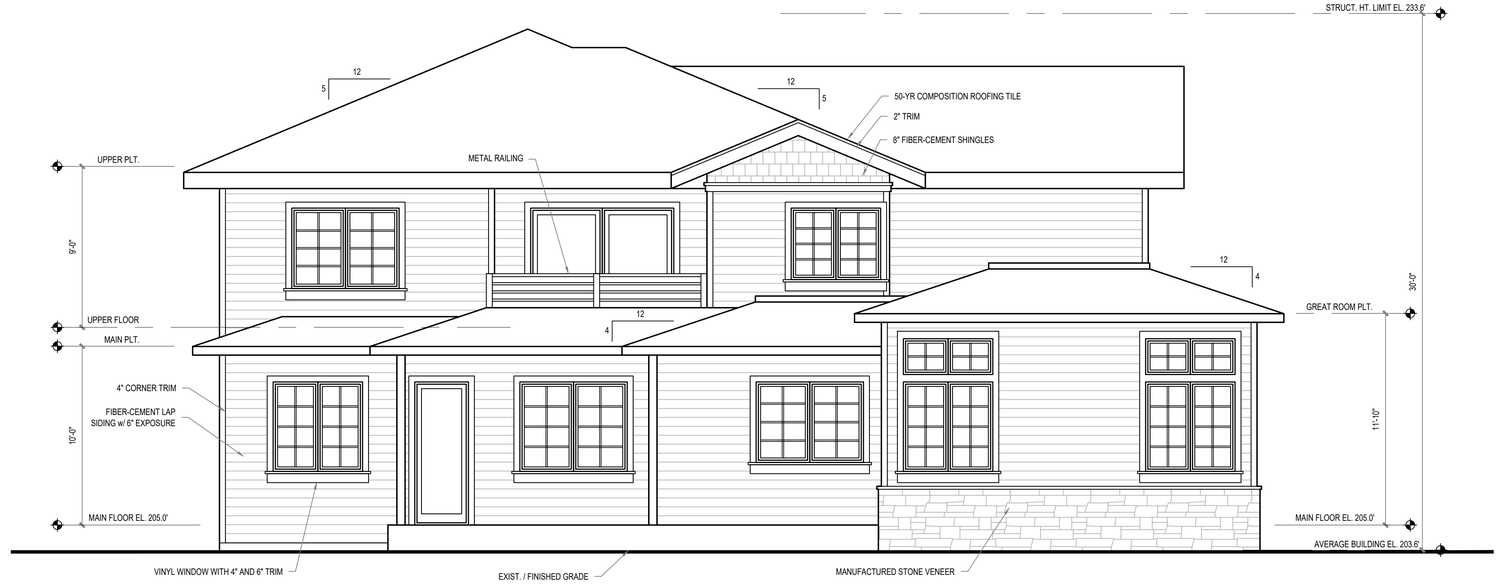

WEST ELEVATION

SCALE: 1/4" = 1'-0"

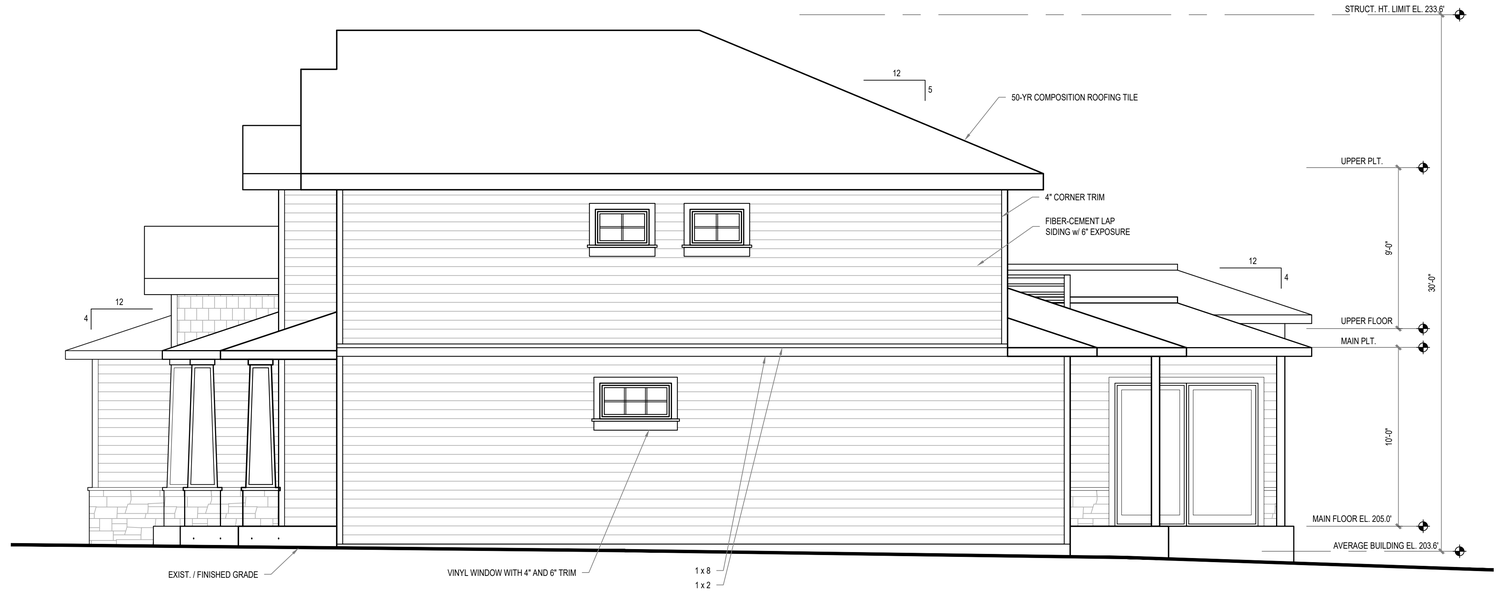

NORTH ELEVATION

SCALE: 1/4" = 1'-0"

CHC ARCHITECTS

13301 SE 79th PL Unit A205
NEWCASTLE WA 98059
(M) 425.785.3992
(O) 425.988.3618
chcarch@gmail.com

8666 REGISTERED ARCHITECT CHAOHUA CHANG STATE OF WASHINGTON

CHEN RESIDENCE

3869 80TH AVE SE MERCER ISLAND WA 98040

NUMBER	DATE	DESCRIPTION OF REVISIONS
	11-10-2019	PERMIT PLANS
	03-17-2020	RESPONSE TO REVIEW COMMENTS
	08-06-2020	RESPONSE TO REVIEW COMMENTS

SHEET TITLE

BUILDING ELEVATIONS

JOB NUMBER

SHEET NUMBER

A4

CITY STAMP

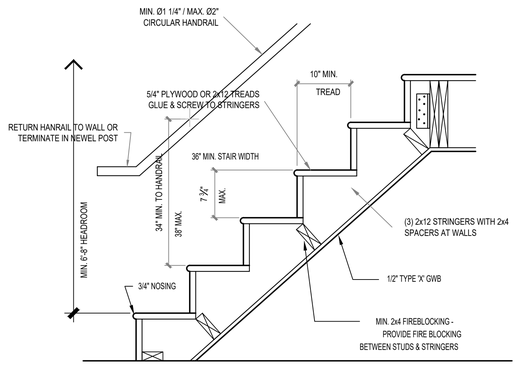

TYP. STAIR DETAIL

SCALE: 1" = 1'=0"

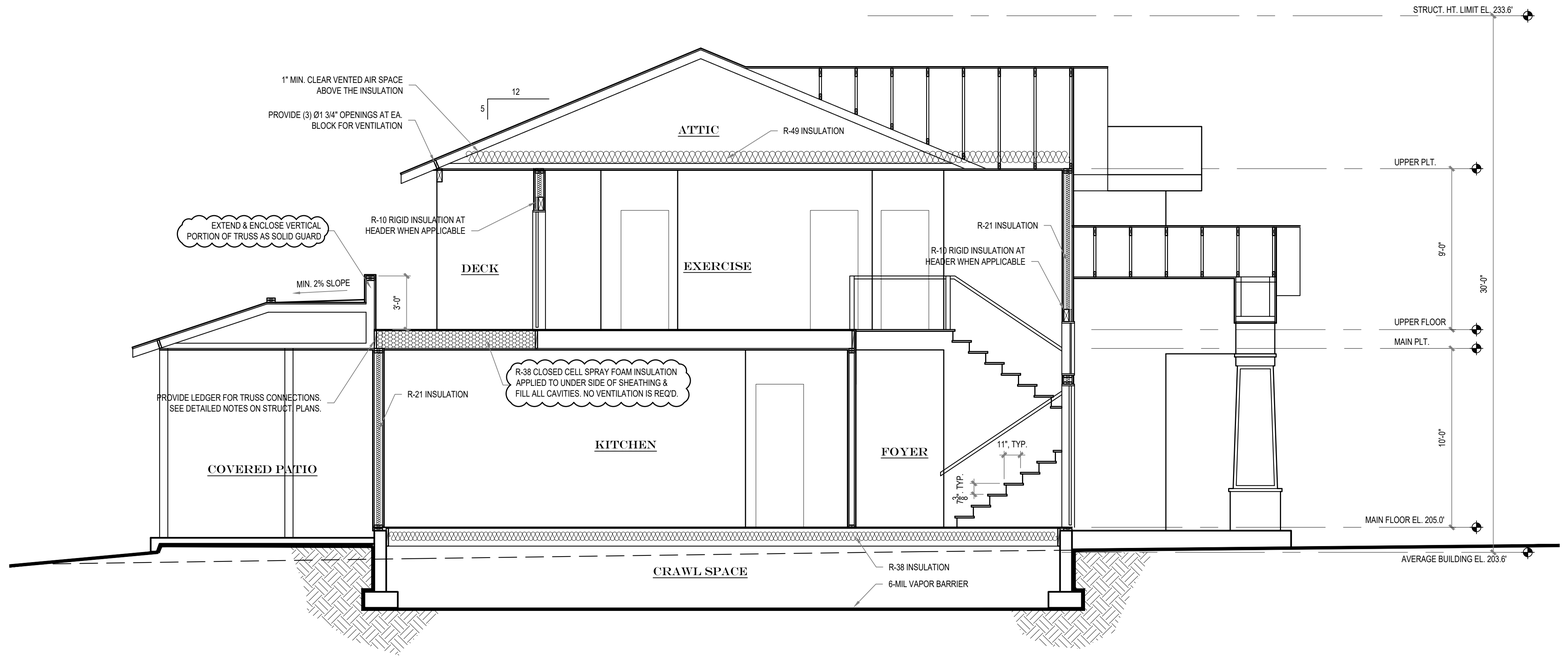

BUILDING SECTINO A-A

SCALE: 1/4" = 1'-0"

ROOF CONSTRUCTION:

50-YR COMPOSITION ROOFING ON
30# FELT ON
PLYWOOD ROOF SHEATHING ON
2x RAFTER OR TRUSS TOP CHORDS @ 24" O.C.
R-49 INSULATION W/ VAPOR BARRIER
2x CEILING JOISTS OR TRUSS BOTTOM CHORDS @ 24" O.C. (U.N.O.)
5/8" G.W.B. (5/8" TYPE 'X' @ GARAGE WHERE NOTED)

FLOOR CONSTRUCTION:

CARPET, HARDWOOD, OR TILE FINISH FLOOR ON
T&G PLYWOOD SUBFLOOR (SEAL ALL SEAM) ON
FLOOR JOISTS @ 16" O.C. U.N.O. (SEE FRAMING PLANS)

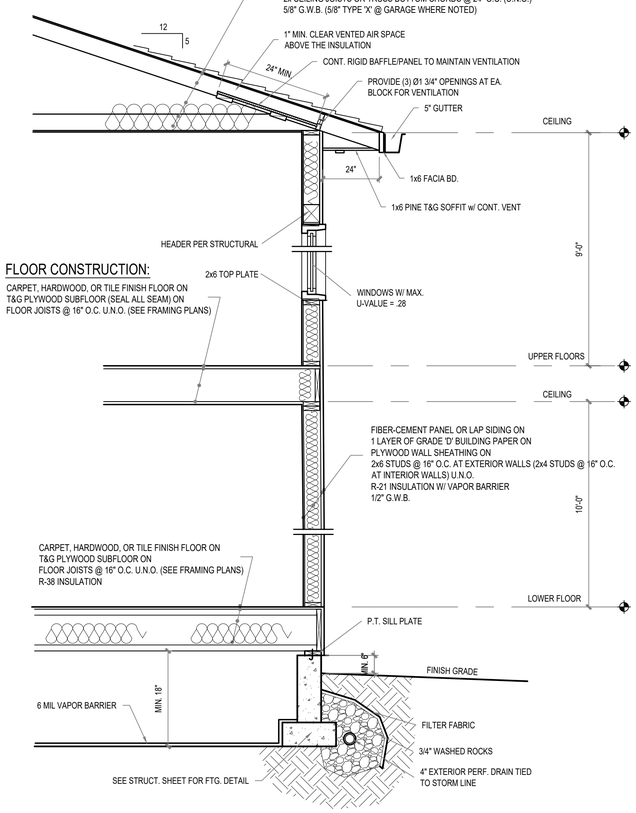

TYP. WALL SECTION

SCALE: 1/2" = 1'=0"

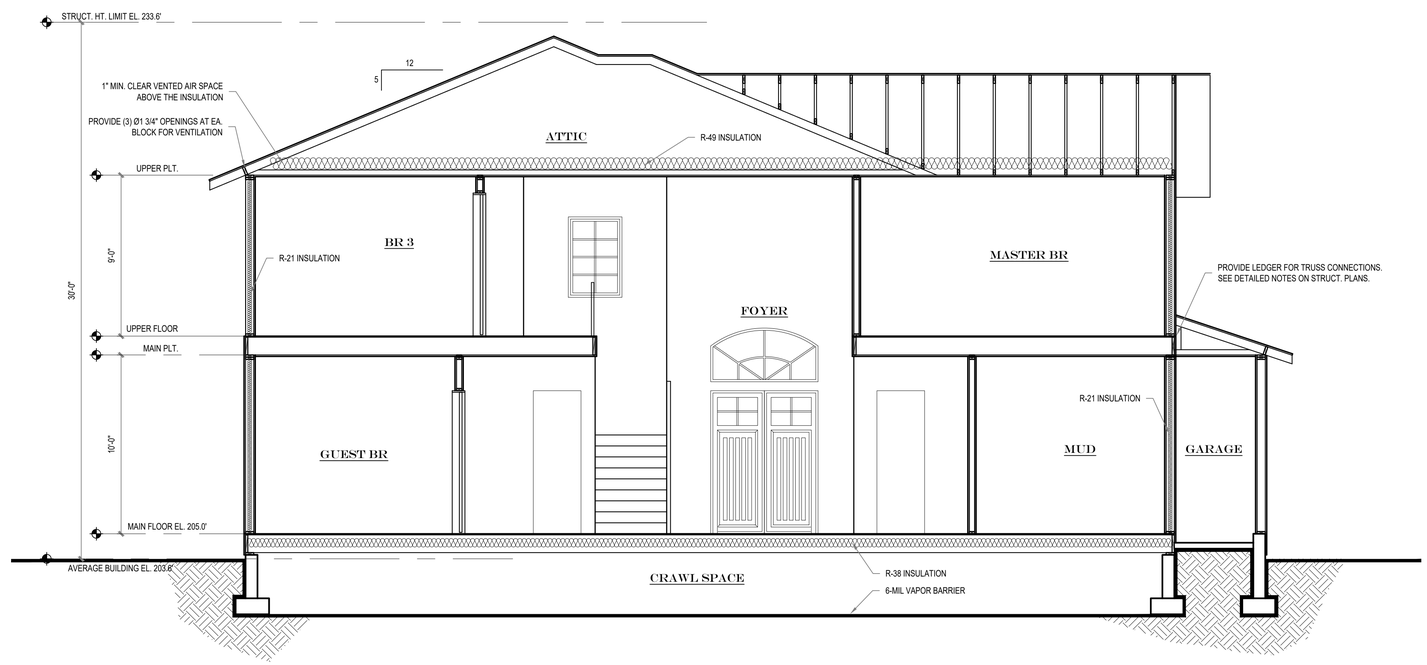

BUILDING SECTINO B-B

SCALE: 1/4" = 1'-0"

CHC ARCHITECTS

13301 SE 79th PL Unit A205
NEWCASTLE WA 98059
(M) 425.785.3992
(O) 425.988.3618
chcarch@gmail.com

8666 REGISTERED ARCHITECT
CHAOHUA CHANG
STATE OF WASHINGTON

CHEN RESIDENCE

3869 80TH AVE SE MERCER ISLAND WA 98040

NUMBER	DATE	DESCRIPTION OF REVISIONS
	11-10-2019	PERMIT PLANS
	03-17-2020	RESPONSE TO REVIEW COMMENTS
	08-06-2020	RESPONSE TO REVIEW COMMENTS

SHEET TITLE

SECTIONS AND DETAILS

JOB NUMBER

SHEET NUMBER

A5

CITY STAMP

GENERAL STRUCTURAL NOTES:

(THE FOLLOWING NOTES APPLIES TO THE PROPOSED PROJECT UNLESS OTHERWISE NOTED ON THE PLANS AND DETAILS)

ALL DESIGN AND CONSTRUCTION SHALL COMPLY WITH THE 2015 INTERNATIONAL BUILDING CODE

UNLESS INDICATED AS EXISTING OR (E), ALL OTHERS ARE NEW CONSTRUCTIONS OR AS INDICATED AS (N).

DESIGN LOADING CRITERIA:

1. DESIGN LOADS:	ROOF SNOW LOAD:	25 PSF
	FLOOR LIVE LOAD:	40 PSF
	DECK LIVE LOAD:	60 PSF
	WIND:	110-MPH (3-SECOND GUST), EXPOSURE B, Kzt=2.00
	SEISMIC:	SEISMIC USER GROUP I, I=1.0,
		SITE CLASS SD
		R=6.5 (WOOD SHEAR WALL)
		Ωo=3.0
		Cd=4.0
		Ss=1.476; S_1=0.501,
		Fa=1.000; F_v=1.500,
		S_{DS}=0.984; S_{D1}=0.501

DESIGN SOIL PRESSURE:

1500 PSF MAXIMUM DEAD+LIVE LOAD WITH ALLOWED INCREASE FOR DEPTH OF 110 PSF PER FOOT. CAST FOOTING ON NATIVE SITE SOILS OR STRUCTURAL FILL THAT EXTENDS DOWN TO THESE SOILS.

EQUIVALENT LATERAL FLUID PRESSURE FOR CANTILEVER WALLS:	35 PSF
BASEMENT WALLS:	55 PSF
PASSIVE SOIL PRESSURE:	350 PCF
SOIL FRICTION:	0.35

CONCRETE AND FOUNDATION CONSTRUCTIONS:

1. ALL CONCRETE f'c=3,000 PSI (2,500 PSI USED FOR THE DESIGN), MAXIMUM WATER/CEMENT RATIO =0.45, MINIMUM 5-1/2 SACKS OF CEMENT PER CUBIC YARD. NO SPECIAL INSPECTION REQUIRED. CONCRETE BATCH TICKET OR DELIVERY RECEIPT FOR 3,000 PSI MINIMUM CONCRETE ON SITE FOR BUILDING INSPECTOR VERIFICATION. CONCRETE SHALL BE AIR ENTRAINED. TOTAL AIR CONTENT (PERCENT BY VOLUME OF CONCRETE) SHALL NOT BE LESS THAN 5 PERCENT OR MORE THAN 7 PERCENT.

2. REINFORCING STEEL SHALL CONFORM TO ASTM A615, GRADE 60. NO SPECIAL INSPECTION REQUIRED. ASTM A706, GRADE 60, REINFORCING STEEL SHALL BE USED FOR WELDED OR FIELD-BENT BARS, SHEAR WALL BOUNDARY MEMBER REINFORCING, MAIN REINFORCING, SPIRALS, TIES AND STIRRUPS IN THE FRAME MEMBERS (BEAMS AND COLUMNS) COMPRISING THE LATERAL FORCE RESISTING SYSTEM.

3. WELDED WIRE FABRIC PER ASTM A185. FURNISH IN FLAT SHEETS, NOT ROLLS. LAP EDGES 1-1/2 MESH MINIMUM.

4. PROVIDE CONCRETE COVER AS FOLLOWS: FOOTINGS 3", WALLS 1-1/2", AND SLAB ON GRADE 1-1/2".

5. PROVIDE 2#4 LONGITUDINAL BOTTOM BARS IN WALL FOOTINGS. PROVIDE CORNER BARS OF SAME SIZE AND NUMBER AT CORNERS AND INTERSECTIONS, 42 BAR DIAMETERS EACH LEG. PROVIDE VERTICAL DOWELS OF SAME SIZE, NUMBER AND SPACING AS CONCRETE STEM WALL VERTICAL BARS WITH A 90 DEGREE STANDARD HOOK AT THE BOTTOM OF THE FOOTING.

6. REINFORCING CONCRETE WALLS AS FOLLOWS"
6" WALLS, #4 @ 12" HORIZONTAL AND VERTICAL AT CENTER OF WALL,
8" WALLS, #5 @ 15" OR #4 @ 12" HORIZONTAL AND VERTICAL AT CENTER OF WALL,
10" WALLS, #4 @ 16" HORIZONTAL AND VERTICAL AT EACH FACE,
12" WALLS, #4 @ 12" HORIZONTAL AND VERTICAL AT EACH FACE.
AT OPENINGS OVER 12" SQUARE, PROVIDE 2#5 BARS AT CENTER OF WALL ALL FOUR SIDES, EXCEPT 10" WALLS OR OVER PROVIDE 1#6 BAR EACH FACE ALL FOUR SIDES, EXTENDING 42 BAR DIAMETERS PAST OPENING. PROVIDE 1#5X4'-0" DIAGONAL BAR AT CENTER OF WALL ALL FOUR CORNERS.

AT CORNERS, PROVIDE CORNER BARS IN OUTSIDE FACE OF SAME SIZE AND SPACING AS HORIZONTAL BARS, 42 BAR DIAMETER EACH LEG.

AT INTERSECTIONS, PROVIDE CORNER BARS OF SAME SIZE, NUMBER AND SPACING AS HORIZONTAL BARSOF INTERSECTING WALL, 42 BAR DIAMETER EACH LEG.

PROVIDE 2#4 LONGITUDINAL BARS AT TOP OF WALLS. PROVIDE KEY WAY OR ROUGHENED SURFACE AT CONSTRUCTION JOINTS.

PROVIDE VERTICAL DOWELS OF SAME SIZE, NUMBER AND SPACING AS VERTICAL BARS.

7. GROUT – 5000 PSI MINIMUM 7-DAY CUBE STRENGTH PER ASTM C1157-00. GROUT TO BE PREMIXED, NON-SHRINK "MASTERFLOW 928 GROUT" BY MASTER BUILDERS OR APPROVED EQUAL. ICC CERTIFICATION REQUIRED. USE SPECIFIC GROUT MIX RECOMMENDED BY MANUFACTURER FOR EACH GROUT APPLICATION AND FOLLOW MANUFACTURER'S INSTRUCTIONS.

8. ANCHOR BOLTS, ASTM A307. SPECIAL INSPECTION REQUIRED. SET ALL ANCHOR BOLTS BY TEMPLATE WHEREVER POSSIBLE.

9. DRILL-IN EXPANSION BOLTS, "KWIK-BOLT TZ" BY HILTI FASTENING SYSTEMS BY HILTI FASTENING SYSTEM OR APPROVED EQUAL. ICC CERTIFICATION REQUIRED (ERS-1917). SPECIAL INSPECTION REQUIRED.

10. DRILL-IN ADHESIVE BOLTS, "HIT RE-500" ADHESIVE ANCHOR SYSTEM BY HILTI FASTENING SYSTEM OR APPROVED EQUAL. ICC CERTIFICATION REQUIRED (ESR-2322). SPECIAL INSPECTION REQUIRED .

CONSTRUCTION REQUIREMENTS:

1. CONTRACTOR SHALL VERIFY DIMENSIONS AND CONDITIONS FOR COMPATIBILITY AND SHALL NOTIFY OWNER OF ANY DISCREPANCIES PRIOR TO CONSTRUCTION. ALL DIMENSIONS OF EXISTING CONSTRUCTION SHOWN IN THE DRAWINGS ARE INTENDED AS GUIDELINES ONLY AND MUST BE VERIFIED. THE CONTRACTOR SHALL BRING ALL DISCREPANCIES TO THE OWNER.

2. CONTRACTOR SHALL PROVIDE TEMPORARY SHORING AND BRACING FOR THE STRUCTURE AND STRUCTURAL COMPONENTS UNTIL ALL FINAL CONNECTIONS HAVE BEEN COMPLETED IN ACCORDING WITH THE PLANS AND DETAILS. THIS INCLUDES EXISTING STRUCTURE.

3. CONTRACTOR SHALL BE RESPONSIBLE FOR ALL SAFETY AND HEALTH PRECAUTIONS INCLUDING HAZARDOUS CONDITIONS AND MATERIALS EXISTED OR CREATED BY OTHER PARTIES THAT WORKING ON THE PROJECT. CONTRACTOR SHALL ALSO BE RESPONSIBLE FOR CONSTRUCTION METHODS, TECHNIQUES, AND SEQUENCES OR PROCEDURES REQUIRED TO PERFORM THE WORK.

4. CONTRACTOR SHALL BE RESPONSIBLE FOR KEEPING ALL EXISTING COMPONENTS, WHICH ARE REQUIRED TO REMAIN, IN THEIR ORIGINAL CONDITION. THIS INCLUDES WEATHER PROTECTIONS FOR THESE COMPONENTS UNTIL SUCH TIME THAT THE ENTIRE DWELLING INCLUDING THE NEW ADDITION ITSELF IS WEATHER PROTECTED.

5. CONTRACTOR INITIATED CHANGES SHALL BE SUBMITTED IN WRITING TO THE OWNER FOR APPROVAL PRIOR FABRICATION OR CONSTRUCTION. CHANGES SHOWN IN SHOP DRAWINGS ONLY WILL NOT SATISFY THIS REQUIREMENT.

6. CONTRACTOR SHALL VERIFY ALL EXISTING CONDITIONS BEFORE COMMENCING ANY DEMOLITION. SHORING SHALL BE INSTALLED TO SUPPORT EXISTING CONSTRUCTION AS REQUIRED AND IN A MANNER SUITABLE TO THE WORK SEQUENCES. DEMOLITION DEBRIS SHALL NOT BE ALLOWED TO DAMAGE OR OVERLOAD THE EXISTING STRUCTURAL. LIMIT CONSTRICTION LOADING (INCLUDING DEMOLITION DEBRIS) ON EXISTING CEILING FAMING TO 10 PSF AND ON EXISTING FLOOR FRAMING TO 40 PSF. PROVIDE TEMPORARY PLANKS OR STRUCTURAL SHEATHING OVER THE EXISTING CEILING JOISTS AS REQUIRED TO PROTECT THE EXISTING SOFFIT.

7. CONTRACTOR SHALL CHECK FOR DRY-ROT FOR ALL EXISTING STRUCTURAL COMPONENTS AT EXTERIOR WALLS, EXISTING TOILET ROOM FLOORS AND WALLS, AREAS SHOWN WATER STAINS, WOOD IN CONTACT WITH EARTH AND CONCRETE, AND ALL WOOD MEMBERS IN CRAW SPACES. ALL ROTTEN WOOD SHALL BE REMOVED AND DAMAGED MEMBERS SHALL BE REPLACED OR REPAIRED AS DIRECTED BY THE OWNER.

8. DRAWINGS INDICATE GENERAL AND TYPICAL DETAILS OF CONSTRUCTION. WHERE CONDITIONS ARE NOT SPECIFICALLY INDICATED BUT ARE OF SIMILAR CHARACTER TO DETAILS SHOWN, SIMILAR DETAILS OF CONSTRUCTION SHALL BE USED, SUBJECT TO REVIEW AND APPROVAL BY THE OWNER.

9. ALL STRUCTURAL SYSTEMS, WHICH ARE TO BE COMPOSED OF COMPONENTS TO BE FIELD ERECTED, SHALL BE SUPERVISED BY THE SUPPLIER DURING MANUFACTURING, DELIVERY, HANDLING, STORAGE, AND ERECTION IN ACCORDANCE WITH INSTRUCTIONS PREPARED BY THE SUPPLIER.

10. THE MANUFACTURER'S INSTRUCTIONS SHALL BE AVAILABLE ON THE JOB SITE AT THE TIME OF INSPECTION, FOR THE INSPECTOR'S USE AND REFERENCE.

STRUCTURAL FRAMING REQUIREMENTS:

1. ALL LUMBER SHALL BE KILN DRIED OR MC-19 WITH WWPA GRADED OR APPROVED EQUAL. ALL STRUCTURAL FLOOR, ROOF, AND SHEAR WALL SHEARING SHALL BE APA RATED. ALL SPECIFIED INDUSTRIAL LUMBERS, NAMELY PARALLAM PSL, MICROLLAM LVL, TIMBERSTRAND LSL, AND TJI SHALL BE MADE BY TRUS-JOIST CORPORATION OR OWNER APPROVED EQUAL.
ALL GLUED LAMINATED MEMBERS SHALL BE FABRICATED IN ACCORDANCE WITH AITC 110, AITC 117 AND ANSI/AITC A190.1. EACH MEMBER SHALL BEAR AN AITC IDENTIFICATION MARK AND SHALL BE ACCOMPANIED BY AITC CERTIFICATE OF CONFORMANCE. USE EXTERIOR TYPE ADHESIVES. BEAMS SHALL BE INDUSTRIAL APPEARANCE GRADE, UON BY THE ARCHITECT. SINGLE SPAN BEAMS SHALL BE COMBINATION 24F-V4, Fb=2400 PSI, Fv=265 PSI, E=1,800,000 PSI; CANTILEVERED SPAN BEAMS SHALL BE COMBINATION 24F-V8, Fb=2400 PSI, Fv=265 PSI, E=1,800,000 PSI.

2. MINIMUM NAILING SHALL COMPLY WITH TABLE 2304.10.1 OF THE 2015 IBC.

3. ALL NAILS SIZES SPECIFIED ON DRAWINGS ARE BASED ON THE FOLLOWING SPECIFICATIONS:
NAIL SIZE, LENGTH, AND DIAMETER
6D 2" 0.113" 8D 2-1/2" 0.131 10D 3" 0.148 16D BOX 3" 0.131
THE FOLLOWING STAPLES MAY BE SUBSTITUTED FOR NAILING OF PLYWOOD
NAIL SIZE, EQUIVALENT STAPLE, AND MINIMUM LENGTH
6D 16GA 1-3/4" 8D 15GA 1-3/4" 10D 13GA 1-3/4"

4. GALVANIZED METAL TIMBER CONNECTORS CALLED OUT BY LETTERS AND NUMBERS SHALL BE "STRONG-TIE" BY SIMPSON COMPANY INCLUDING SIMPSON STRONG WALLS AND SIMPSON GARAGE PORTAL WALLS (WHERE OCCUR) OR OWNER APPROVED EQUAL. IF NO SPESIFIC HANGER IS CALLED OUT, ANY HANGER MADE FOR THE SPECIFIED BEAM OR JOIST CAN BE USED.

FOR THESE MULTIPLE STUDS AND ALL POSTS & HOLDOWN STUDS

5. ALL EXTERIOR WALL STUDS ARE 2X6 DOUGLAS FIR NO.2 STUDS AT 16" ON CENTER. ALL INTERIOR BEARING AND SHEAR WALL STUDS ARE 2X4 DOUBLAS FIR NO.2 STUDS AT 16" ON CENTER. PROVIDE ONE BEARING STUD AND ONE FULL HEIGHT STUD AT EACH SIDE OF DOOR AND WINDOW OPENINGS WHEN THEIR ROUGH OPENING WIDTH IS EQUAL OR LESS THAN 3'-0". PROVIDE TWO BEARING STUDS AND TWO FULL HEIGHT STUDS AT EACH SIDE OF DOOR AND WINDOW OPENINGS WHEN THEIR ROUGH OPENING WIDTH IS GREATER THAN 3'-0" OR WALL IS FRAMED WITH (2)2X6 AT 16" ON CENTER. PROVIDE MULTIPLE STUDS UNDER ALL BEAM AND KING-TRUSS BEARING LOCATIONS. THESE MULTIPLE STUDS NEED TO EXTEND DOWN TO THE TOP OF CONCRETE. PROVIDE MULTIPLE VERTICAL BLOCKING AT JOIST SPACING AS NEEDED. FACE NAIL WALL TOP DOUBLE PLATE WITH 16D @ 12" AND LAP MINIMUM 4'-0" AT JOINTS AND PROVIDE (6) 16D @ 4" ON CENTER EACH SIDE OF JOINT. FACE NAIL WALL SILL PLATE THROUGH FLOOR SHEATHING TO DOUBLE PLATES, BEAM, OR SUPPORTING MEMBER BELOW WITH 16D @ 6" ON CENTER. MULTIPLE STUD SHALL BE NAILED TOGETHER WITH 16D @ 12" ON CENTER STAGGERED EACH FACE. PROVIDE SOLID BLOCKING BETWEEN STUDS AT MID-HEIGHT FOR ALL STUD WALLS OVER 10' IN HEIGHT.

WITH THE TOTAL WIDTH EQUAL OR WIDER THAN BEAMS/KING TRUSSES

6. PROVIDE DOUBLE JOISTS UNDER ALL PARALLEL PARTITIONS THAT EXTEND OVER MORE THAN HALF THE JOIST LENGTH AND AROUND ALL OPENING IN FLOOR. FLOOR JOISTS SHALL BE BLOCKED PER THE JOIST MANUFACTURER'S INSTRUCTIONS.

7. ALL FLOOR FRAMING LUMBERS: DOUGLAS FIR NO.2.
ALL HEADERS: DOUGLAS FIR NO.2. TYPICAL HEADER 4X8 MINIMUM UNLESS OTHERWISE SHOWN ON THE PLANS.
ALL POSTS: DOUGLAS FIR NO.2 UNLESS OTHERWISE SHOWN ON THE PLANS
STUDS, PLATES, AND MISCELLANEOUS LIGHT NON-STRUCTURAL FRAMING: HEM-FIR NO.2

8. METAL PLATE CONNECTED WOOD TRUSSES: WOOD TRUSSES SHALL BE DESIGNED, MANUFACTURED AND INSTALLED PER TRUSS PLATE INSTITUTE (ANSI/TPI 1) SPECIFICATIONS. TPI SPECIFICATIONS SHALL NOT REVISE TRUSS ENGINEER'S AND TRUSS MANUFACTURER'S RESPONSIBILITY NOTED BELOW. WEB AND CHORD SIZES INDICATED ON PLANS AND NOTES ARE MINIMUM ONLY. ROOF DESIGN LIVE LOAD PER DESIGN LOADING CRITERIA. ROOF DESIGN DEAD LOAD 10 PSF MINIMUM TOP CHORD AND 7 PSF MINIMUM BOTTOM CHORD WITH LIVE LOAD OF 40 PSF MINIMUM AT ATTIC FLOOR WHERE APPLICABLE. USE 2X6 MINIMUM BOTTOM CHORD FOR ATTIC FLOOR. ROOF DESIGN WIND UPLIFT 15 PSF MINIMUM TYPICAL, EXCEPT USE 30 PSF MINIMUM WITHIN 10 FEET OF ROOF EAVES OR RAKES. DESIGN TRUSSES FOR SUPPORT OF DEAD, LIVE, SNOWDRIFT, AND WIND LOADS AND MECHANICAL/ELECTRICAL EQUIPMENT, PIPING, ETC AS REQUIRED. SNOW DRIFT LOADING LOCATIONS AND VALUES TO BE DETERMINED BY TRUSS ENGINEER. SUBMIT SHOP DRAWINGS AND DESIGN CALCULATIONS SHOWING TRUSSES, TRUSS TO TRUSS AND TRUSS TO SUPPORTING STRUCTURE CONNECTIONS, ERECTION AND PERMANENT BRACING SIZES AND CONNECTIONS. PROVIDE STANDARD TRUSS CAMBER.
PROVIDE ERECTION BRACING PER MANUFACTURE'S INSTRUCTIONS. PROVIDE AND INSTALL PERMANENT BRACING FOR LATERAL SUPPORT OF INDIVIDUAL WEB AND CHORD MEMBERS AS DESIGNED BY THE TRUSS ENGINEER. PROVIDE AND INSTALL ALL TRUSS TO TRUSS AND TRUSS TO SUPPORTING STRUCTURE CONNECTIONS.
TRUSS LATERATIONS SHALL NOT OCCUR UNLESS THE APPROVAL OF A DESIGN PROFESSIONAL.

9. VENT BLOCKINGS CALLED OUT IN THE DRAWINGS ARE 2X WOOD BLOCKING WITH (3) EQUAL SPACED 1-1/2" DIAMETER HOLES ON EACH BLOCKING WITH MASH INSTALLED.

10. ROOF SHEATHING: 15/32"(1/2") MINIMUM CDX PLYWOOD OR STRUCTURAL PANEL WITH SPAN RATING OF 32/16, UNBLOCKED, LAID UP WITH FACE GRAIN PERPENDICULAR TO FRAMING BELOW, STAGGER END JOINTS. INSTALL PLYCLIPS AS REQUIRED. NAILING IS AS FOLLOWS: 10D @ 6" DIAPHRAGM BOUNDARIES, OVER EXTERIOR WALLS, AND INTERIOR SHEAR WALLS, 10D @ 6 ALL SUPPORTED EDGES, AND 10D @ 12" FIELD.

11. FLOOR AND ROOF DECK SHEATHING: 23/32"(3/4") MINIMUM CDX TONGUE AND GROOVE PLYWOOD WITH SPAN RATING OF 40/20, UNBLOCKED FOR FLOOR JOIST SPACED AT 16" ON CENTER; 7/8" MINIMUM CDX TONGUE AND GROOVE PLYWOOD WITH SPAN RATING OF 40/20 UNBLOCKED FOR FLOOR JOIST SPACED AT 24" ON CENTER; LAID UP WITH FACE GRAIN PERPENDICULAR TO FRAMING BELOW, STAGGER END JOINTS. GLUE FLOOR SHEATHING TO ALL SUPPORTS WITH A CONTINUOUS 3/16" DIAMETER BEAD MINIMUM. PROVIDE TWO BEADS AT PANEL JOINTS. NAILING IS AS FOLLOWS: 10D @ 6" DIAPHRAGM BOUNDARIES, OVER EXTERIOR WALLS, AND INTERIOR SHEAR WALLS, 10D @ 6" ALL SUPPORTED EDGES, AND 10D @ 10" FIELD.

12. EXTERIOR/INTERIOR/SHEAR WALL SHEATHING 15/32" (1/2") MINIMUM CDX PLYWOOD WITH SPAN RATING OF 24/0, EXTERIOR SIDE BLOCKED (BLOCK ALL UNSUPPORTED EDGES), NAIL WITH 10D @ 6" ALL EDGES AND 10D @ 12" FIELD. NAIL BOTTOM PLATE TO FRAMING BELOW WITH 16D @ 6".

13. WALL SILL PLATES OVER THE CONCRETE ARE TO BE 3X TREATED LUMBER WITH 1/2" DIAMETER ANCHOR BOLTS AT 4'-0" ON CENTER WITH EMBED IN CONCRETE OF 7" MINIMUM. ALL BOLTS SHALL HAVE 3X3X1/4 STEEL WASHER PLATE UNDER BOLT NUTS. THE EDGE OF A WASHER SHOULD NOT BE LOCATED MORE 1/2" AWAY FROM THE INSIDE FACE OF A SHEAR WALL SHEATHING. MINIMUM OF TWO BOLTS PER PLATE WITH BOLT END DISTANCE OF 6" MINIMUM. SHEAR WALL BOTTOM PLATE NAILING AND ALL NAILING AT PRESSURE TREATED PLATE/MEMBERS SHALL BE HOT-DIPPED ZINC-COATED GALVANIZED STEEL OR STAINLESS-STEEL NAILS.

14. WOOD IN CONTACT WITH CONCRETE SHOULD BE PRESERVATIVE-TREATED WOOD IN ACCORDNACE WITH AWPA U1 AND M4 STANDARDS.

15. FASTENERS INSTALLED IN PRESERVATIVE-TREADED OR IN FIRE-RETARDANT-TREATED WOOD SHALL BE HOT-DIPPED ZINE-COATED GALVANIZED WITH A MINIMUM COATING WEIGHT COMPLYING WITH ASTM A153. THIS INCLUDES NUTS AND WASHERS. FASTENERS OTHER THAN NAILS AND TEMBER RIVETS ARE PERMITTED TO BE MACHANICALLY DEPOSITED ZINC-COATED WITH COATING WEIGHTS COMPLYING WITH ASTM B 695, CLASS 55 MINIMUM.

DHS ENGINEERS
1601 5th Avenue, 1100
Seattle, WA 98101, USA
(206) 734-5858

DIHONG SHAO
STATE OF WASHINGTON
32633
STRUCTURAL ENGINEER
PROFESSIONAL ENGINEER

CHEN RESIDENCE

3869 80TH AVE SE MERCER ISLAND WA 98040

NUMBER	DATE	DESCRIPTION OF REVISIONS
01	09/15/2019	PERMIT SET
02	03/15/2020	PERMIT REVIEW-1
03	07/25/2020	PERMIT REVIEW-1

SHEET TITLE
GENERAL NOTE

JOB NUMBER

SHEET NUMBER
S0.1

CITY STAMP

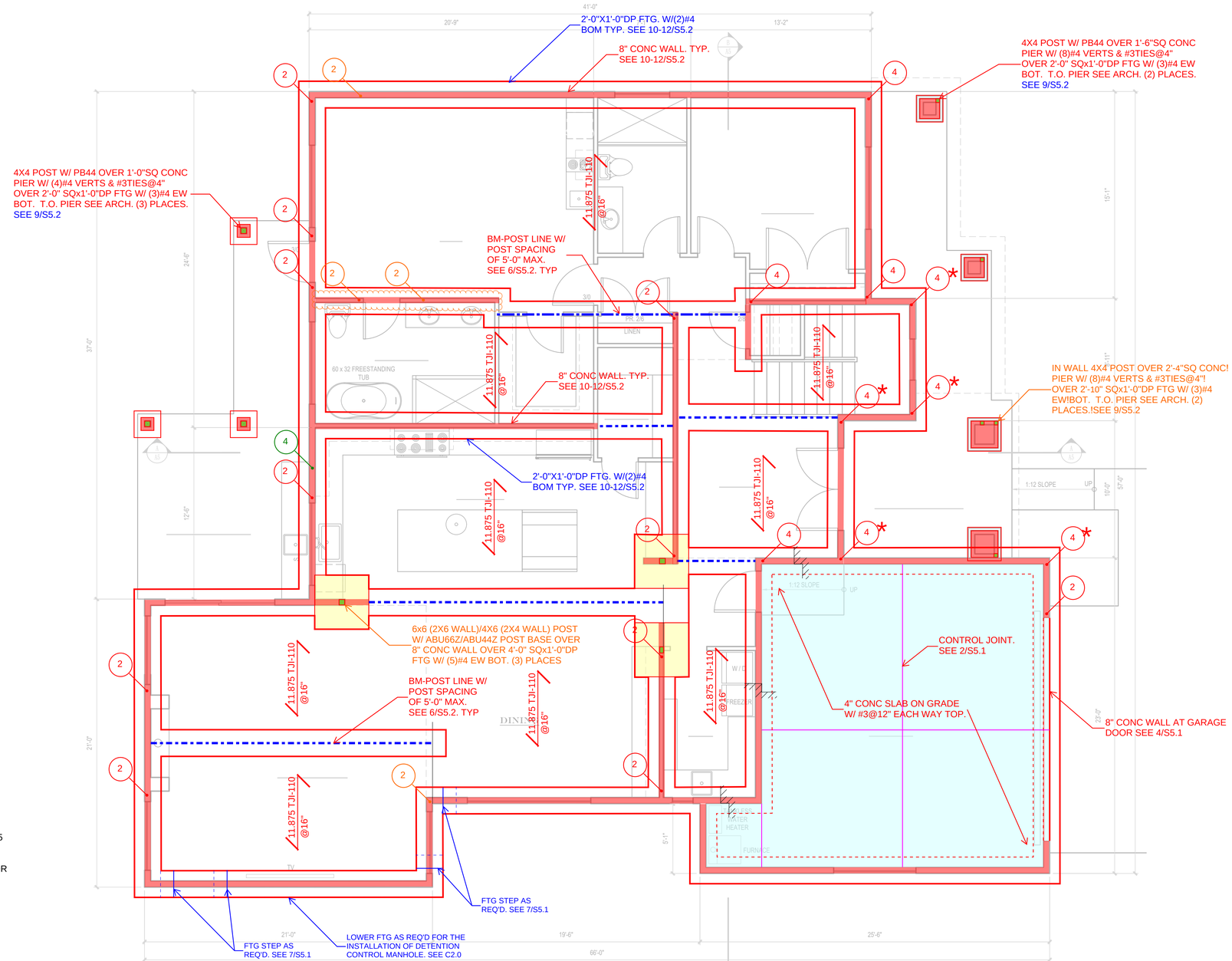

FOUNDATION AND MAIN FLOOR FRAMING PLAN

1/4"=1'-0"

LEGEND

ALL BEARING/SHEAR WALLS SHOWN IN PLANS ARE FOR WALLS BELOW. TYPICAL UNO.

X Y — X LINEAR FT OF TYPE Y SHEAR WALL; REFER TO 8/S5.5 FOR SCHEDULE AND DETAILS.

P Y — TYPE Y SHEAR WALL; REFER TO 6/S5.5 FOR DETAIL.

A A — HOLDOWN STRAP TIES AT TOP (DASHED WHERE OCCURS) AND BOT OF SHEAR WALL PANEL BELOW; REFER TO 1/S5.2 FOR SCHEDULE. CENTER TOP AND BOT STRAPS TO BOT AND TOP OF RIM JOIST RESPECTIVELY & WRAP AROUND RIM JOIST AND/OR BM/HEADER ABOVE & BELOW WHEN TOO LONG

A 1 — HOLDOWN STRAP TIES AT TOP (DASHED WHERE OCCURS) AND HOLDOWN ANCHOR IN CONC AT BOT OF SHEAR WALL PANEL BELOW; REFER TO 1/S5.2 & 1/S5.5 FOR SCHEDULES; CENTER TOP STRAP TO BOT OF RIM JOIST & WRAP AROUND RIM JOIST AND/OR BM ABOVE WHEN TOO LONG

STEP IN FLR OR SLAB

* HOLDOWN SHARED BY BOTH SHEAR WALLS. SEE 4/S5.5

DHS ENGINEERS
1601 5th Avenue, 1100
Seattle, WA 98101, USA
(206) 734-5858

DIHONG SHAO
STATE OF WASHINGTON
32333
STRUCTURAL ENGINEER
PROFESSIONAL ENGINEER

CHEN RESIDENCE

3869 80TH AVE SE MERCER ISLAND WA 98040

NUMBER	DATE	DESCRIPTION OF REVISIONS
01	09/15/2019	PERMIT SET
02	03/15/2020	PERMIT REVIEW-1
03	07/25/2020	PERMIT REVIEW-1

SHEET TITLE
FOUNDATION AND MAIN FLOOR FRAMING PLAN

JOB NUMBER

SHEET NUMBER
S2.1

CITY STAMP

COLOR PRINT REQD
EXISTING
(E) CONC WALL
NEW CONC WALL
NEW WOOD BEARING & SHEAR WALL
OTHER LINES & COLORS AS NOTED

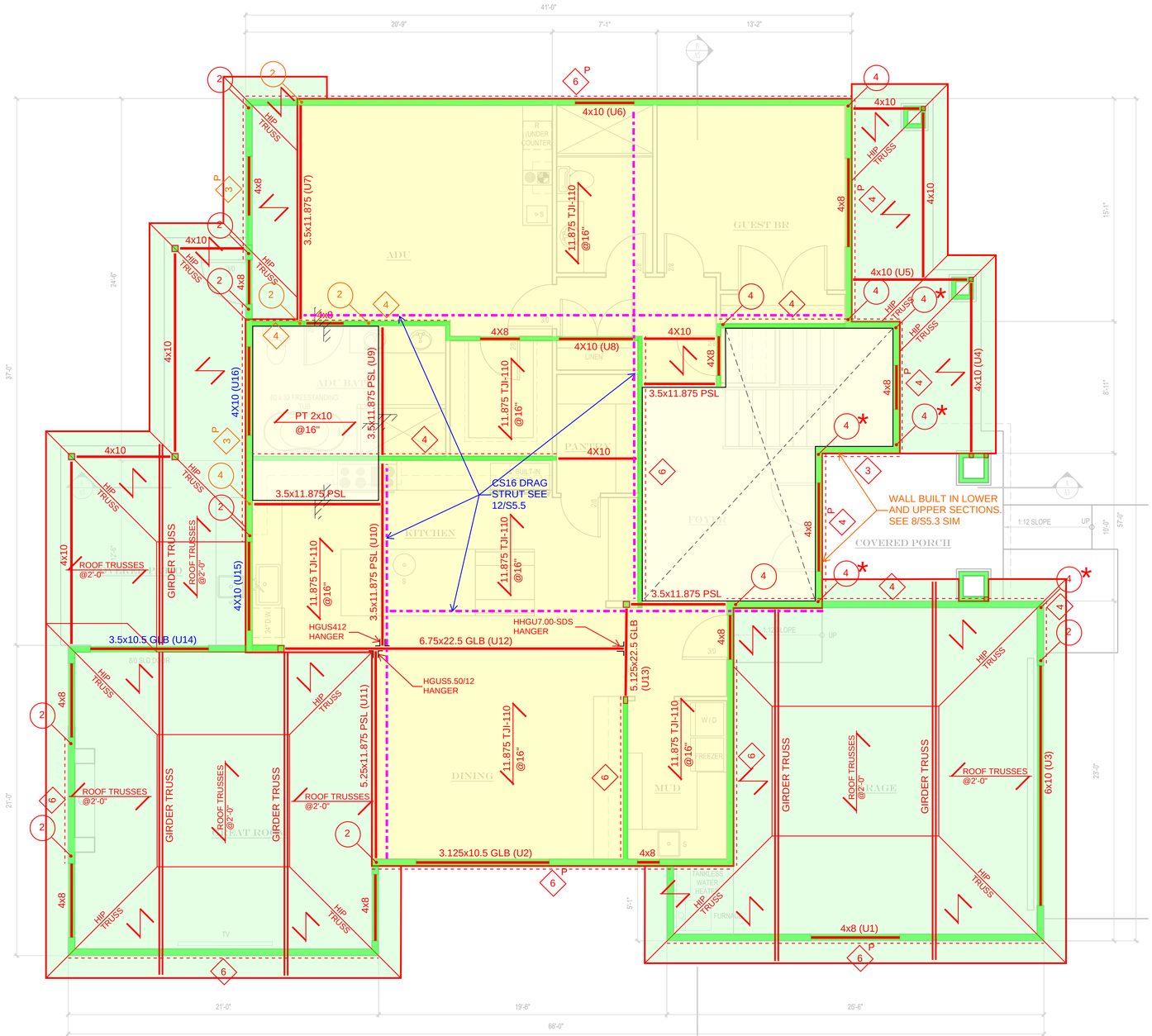

LEGEND

ALL BEARING/SHEAR WALLS SHOWN IN PLANS ARE FOR WALLS BELOW. TYPICAL UNO.

X Y — X LINEAR FT OF TYPE Y SHEAR WALL; REFER TO 8/S5.5 FOR SCHEDULE AND DETAILS.

P Y — TYPE Y SHEAR WALL; REFER TO 6/S5.5 FOR DETAIL.

A A — HOLDOWN STRAP TIES AT TOP (DASHED WHERE OCCURS) AND BOT OF SHEAR WALL PANEL BELOW; REFER TO 1/S5.2 FOR SCHEDULE. CENTER TOP AND BOT STRAPS TO BOT AND TOP OF RIM JOIST RESPECTIVELY & WRAP AROUND RIM JOIST AND/OR BM/HEADER ABOVE & BELOW WHEN TOO LONG

A 1 — HOLDOWN STRAP TIES AT TOP (DASHED WHERE OCCURS) AND HOLDOWN ANCHOR IN CONC AT BOT OF SHEAR WALL PANEL BELOW; REFER TO 1/S5.2 & 1/S5.5 FOR SCHEDULES; CENTER TOP STRAP TO BOT OF RIM JOIST & WRAP AROUND RIM JOIST AND/OR BM ABOVE WHEN TOO LONG

STEP IN FLR OR SLAB

* HOLDOWN SHARED BY BOTH SHEAR WALLS. SEE 4/S5.5

UPPER FLOOR AND LOWER ROOF FRAMING PLAN

1/4"=1'-0"

PLAN NOTES:

1. ALL FLOOR BEAMS ARE TOP FLUSH.

2. PROVIDE PT 2X6/2X10 ROOF/DECK EXTERIOR LEDGER W/ (2)/(3) 0.25X3.5 SDS SCREWS TO EACH STUD OR 16" ON CENTER TO RECIEVE ROOF/DECK SHEATHING AND/OR ROOF/DECK JOISTS FRAMING INTO THE EXTERIOR WALLS FROM LOWER ROOF AND/OR DECK. SEE 11/S5.3.

COLOR PRINT REQD

- EXISTING
- (E) CONC WALL
- NEW CONC WALL
- NEW WOOD BEARING & SHEAR WALL
- OTHER LINES & COLORS — AS NOTED

DHS ENGINEERS
1601 5th Avenue, 1100
Seattle, WA 98101, USA
(206) 734-5858

DIHONG SHAO
STATE OF WASHINGTON
32303
STRUCTURAL ENGINEER
PROFESSIONAL ENGINEER

CHEN RESIDENCE

3869 80TH AVE SE MERCER ISLAND WA 98040

NUMBER	DATE	DESCRIPTION OF REVISIONS
01	09/15/2019	PERMIT SET
02	03/15/2020	PERMIT REVIEW-1
03	07/25/2020	PERMIT REVIEW-1

SHEET TITLE
UPPER FLOOR AND LOWER ROOF FRAMING PLAN

JOB NUMBER

SHEET NUMBER
S2.2

CITY STAMP

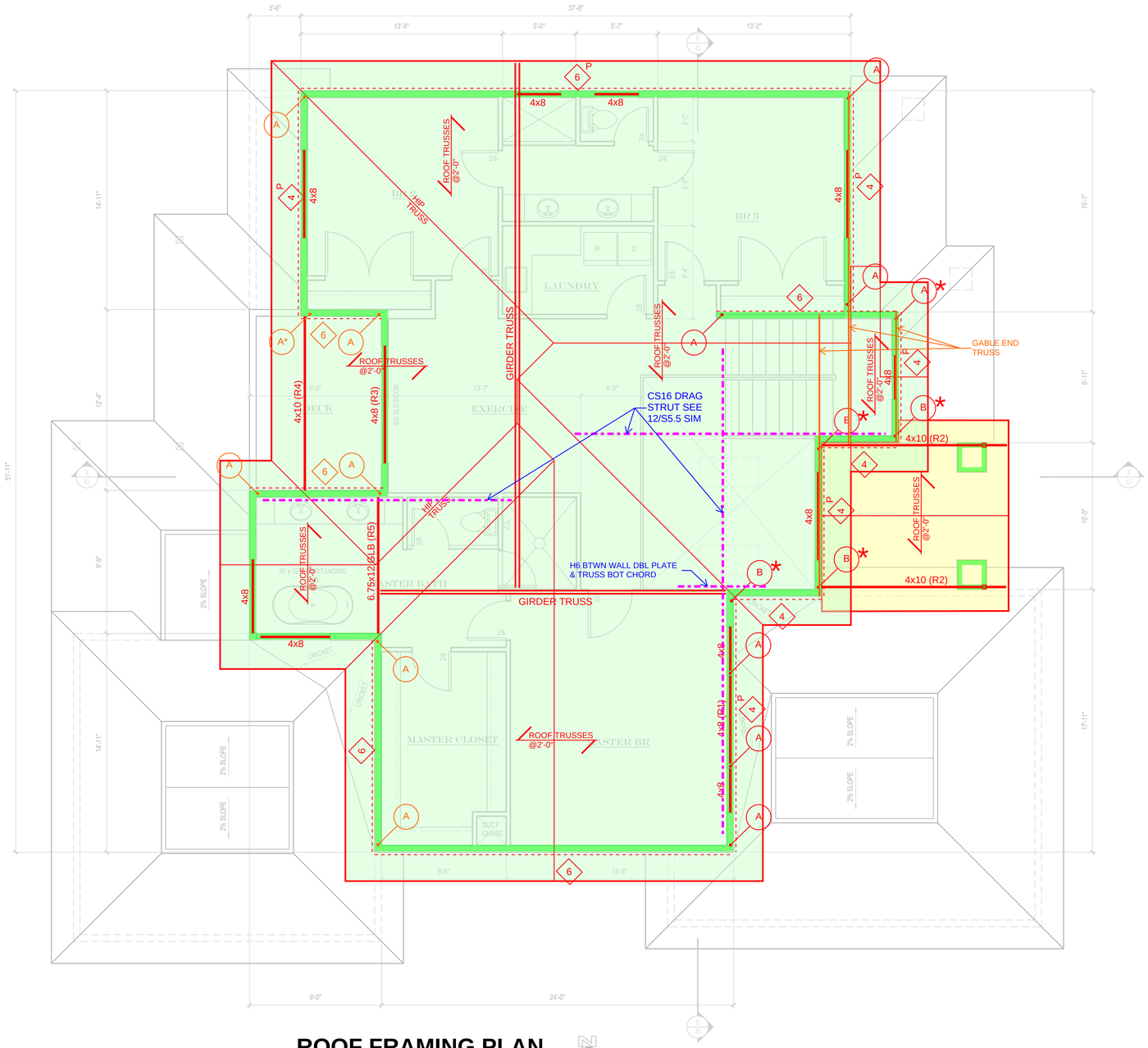

LEGEND

ALL BEARING/SHEAR WALLS SHOWN IN PLANS ARE FOR WALLS BELOW. TYPICAL UNO.

X LINEAR FT OF TYPE Y SHEAR WALL; REFER TO 8/S5.5 FOR SCHEDULE AND DETAILS.

TYPE Y SHEAR WALL; REFER TO 6/S5.5 FOR DETAIL.

HOLDOWN STRAP TIES AT TOP (DASHED WHERE OCCURS) AND BOT OF SHEAR WALL PANEL BELOW; REFER TO 1/S5.2 FOR SCHEDULE. CENTER TOP AND BOT STRAPS TO BOT AND TOP OF RIM JOIST RESPECTIVELY & WRAP AROUND RIM JOIST AND/OR BM/HEADER ABOVE & BELOW WHEN TOO LONG

HOLDOWN STRAP TIES AT TOP (DASHED WHERE OCCURS) AND HOLDOWN ANCHOR IN CONC AT BOT OF SHEAR WALL PANEL BELOW; REFER TO 1/S5.2 & 1/S5.5 FOR SCHEDULES; CENTER TOP STRAP TO BOT OF RIM JOIST & WRAP AROUND RIM JOIST AND/OR BM ABOVE WHEN TOO LONG

STEP IN FLR OR SLAB

* HOLDOWN SHARED BY BOTH SHEAR WALLS. SEE 4/S5.5

ROOF FRAMING PLAN

1/4"=1'-0"

PLAN NOTE:

1. PROVIDE PT 2X6 EXTERIOR LEDGER W/ (2) 0.25X3.5 SDS SCREWS TO EACH STUD OR 16" ON CENTER TO RECIEVE ROOF SHEATHING AND/OR ROOF JOISTS FRAMING INTO THE EXTERIOR WALLS FROM LOWER ROOF.

COLOR PRINT REQD

- EXISTING
- (E) CONC WALL
- NEW CONC WALL
- NEW WOOD BEARING & SHEAR WALL
- OTHER LINES & COLORS — AS NOTED

DHS ENGINEERS
1601 5th Avenue, 1100
Seattle, WA 98101, USA
(206) 734-5858

DIHONG SHAO
STATE OF WASHINGTON
32333
STRUCTURAL ENGINEER
PROFESSIONAL ENGINEER

CHEN RESIDENCE

3869 80TH AVE SE MERCER ISLAND WA 98040

NUMBER	DATE	DESCRIPTION OF REVISIONS
01	09/15/2019	PERMIT SET
02	03/15/2020	PERMIT REVIEW-1
03	07/25/2020	PERMIT REVIEW-1

SHEET TITLE
ROOF FRAMING PLAN

JOB NUMBER

SHEET NUMBER
S2.3

CITY STAMP

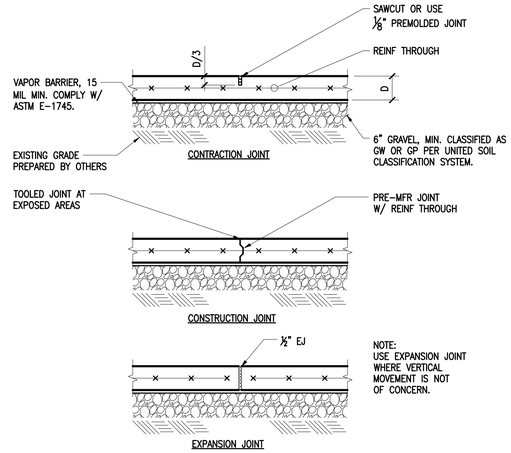

2 SLAB JOINT DETAILS
1"=1'-0"

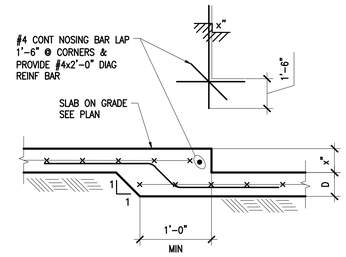

3 DEPRESSED SLAB ON GRADE
1"=1'-0"

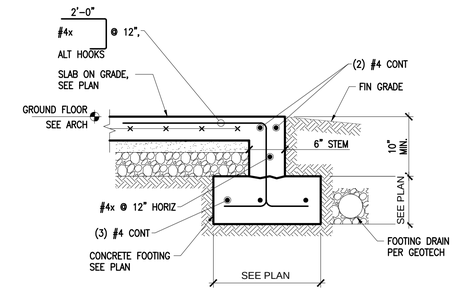

4 SLAB EDGE AT (GARAGE) DOOR
1"=1'-0"

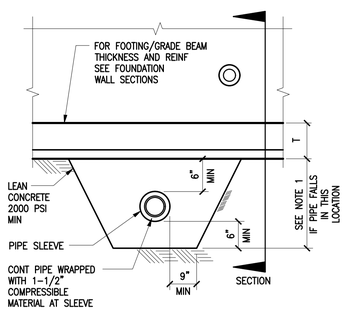

NOTES:
1. SINGLE PIPES 8"ø OR LESS PERPENDICULAR TO AND GREATER THAN 24" CLEAR BELOW FOOTINGS DO NOT REQUIRE CONCRETE ENCASEMENT. (PIPE GROUPINGS BELOW 24" SHALL BE REVIEWED BY THE STRUCTURAL ENGINEER).
2. PIPES LARGER THAN 8"ø SHALL BE REVIEWED BY THE STRUCTURAL ENGINEER.

5 PIPE CLEARANCE AT STRIP FOOTING/GRADE BEAM
1/2"=1'-0"

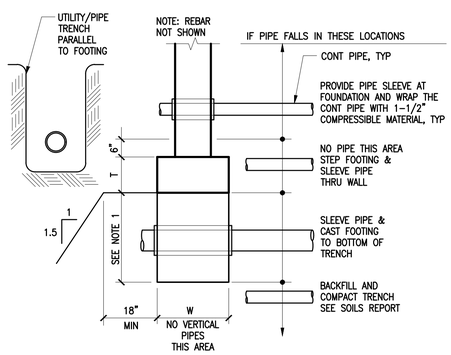

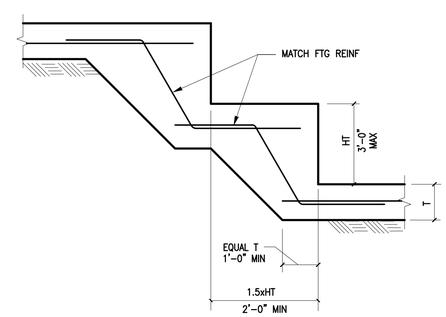

7 STEPPED FOOTING
1/2"=1'-0"

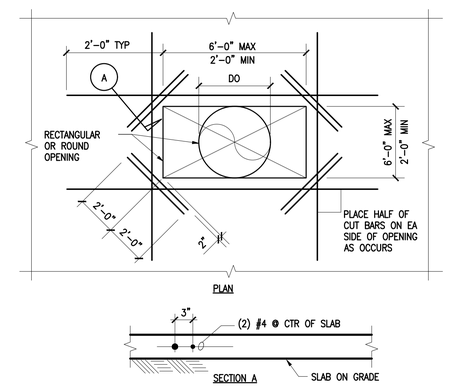

8 OPENING IN CONCRETE SLAB
1"=1'-0"

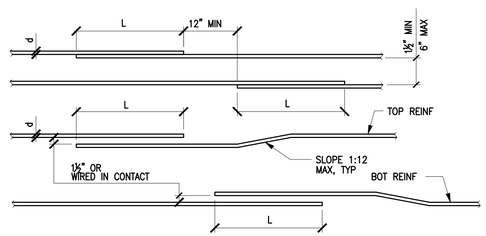

NOTES:
1. SCHEDULE APPLIES TO UNCOATED GRADE 60 BARS IN NORMAL WEIGHT CONCRETE.
2. FOR LIGHTWEIGHT CONCRETE MULTIPLY LENGTH IN SCHEDULE BY 1.3.
3. ALL SPLICES SHALL BE CLASS B SPLICES UNLESS INDICATED OTHERWISE.
4. TOP BARS (INDICATED WITH "T" IN SCHEDULE) ARE HORIZONTAL TOP BARS WITH MORE THAN 12" OF CONC CAST BLW THE BARS.
5. BOTTOM BARS (INDICATED WITH "B" IN SCHEDULE) ARE ALL VERTICAL BARS AND HORIZONTAL BARS WITH LESS THAN 12" OF CONCRETE CAST BELOW HORIZONTAL BARS.
6. ANY PORTION OF A STRAIGHT BAR EMBEDMENT LENGTH NOT WITHIN THE CONFINED CORE SHALL BE INCREASED BY A FACTOR OF 1.6.
7. ALL HORIZONTAL SPLICES SHALL BE STAGGERED AS SHOWN. IF MORE THAN 50% OF VERTICAL REINFORCING IS LAP SPLICED WITHIN THE REQUIRED LAP SPLICE LENGTH, THE LAP SPLICE LENGTH SHALL BE INCREASED BY 33%.
8. LAP SPLICES LISTED IN THE SCHEDULE ARE CLASS B LAPS, FOR CLASS A LAPS REDUCE LENGTH BY 25%.
9. FOR f'c=4500psi USE VALUES FOR 4000psi.

SPLICE OR DEVELOPMENT LENGTH (INCHES)

NORMAL WT. CONCRETE f'c (psi)	"CLASS B" TENSION LAP SPLICE SCHEDULE																	
	0.375"		0.500"		0.625"		0.750"		0.875"		1.000"		1.128"		1.270"		1.410"	
	#3		#4		#5		#6		#7		#8		#9		#10		#11	
	T	B	T	B	T	B	T	B	T	B	T	B	T	B	T	B	T	B
3000	28	22	38	29	47	36	56	43	81	63	93	72	105	81	116	90	128	98
4000	25	19	33	25	41	31	49	37	71	54	81	62	91	70	101	78	111	85
5000	22	17	29	23	36	28	44	34	63	49	72	56	81	63	90	69	99	76
6000	20	16	27	21	33	26	40	31	58	45	66	51	74	57	82	63	90	70
–	DEVELOPMENT LENGTH "Ld" SCHEDULE																	
3000	22	17	29	22	36	28	43	33	63	48	72	55	81	62	90	69	98	76
4000	19	15	25	19	31	24	37	29	54	42	62	48	70	54	78	60	85	66
5000	17	13	23	17	28	22	34	26	49	38	56	43	63	48	69	54	76	59
6000	16	12	21	16	26	20	31	24	45	34	51	39	57	44	63	49	70	54

10 REINFORCING SPLICE SCHEDULE
3/4"=1'-0"

DHS ENGINEERS
1601 5th Avenue, 1100
Seattle, WA 98101, USA
(206) 734-5858

CHEN RESIDENCE
3869 80TH AVE SE MERCER ISLAND WA 98040

NUMBER	DATE	DESCRIPTION OF REVISIONS
01	09/15/2019	PERMIT SET
02	03/15/2020	PERMIT REVIEW-1
03	07/25/2020	PERMIT REVIEW-1

SHEET TITLE
TYPICAL CONCRETE DETAIL

JOB NUMBER

SHEET NUMBER
S5.1

CITY STAMP

STRAP TIE SCHEDULE			
TYPE	MANUFACTURER	PRODUCT	NOTES
A	SIMPSON	ST6224 ON (2) 2X	2.54 KIPS
B	SIMPSON	MSTC28 ON (2) 2X	3.46 KIPS
C	SIMPSON	MSTC40 ON (2) 2X	4.75 KIPS
D	SIMPSON	MSTC66 ON (2) 2X	5.86 KIPS

1 STRAP TIE SCHEDULE
NTS

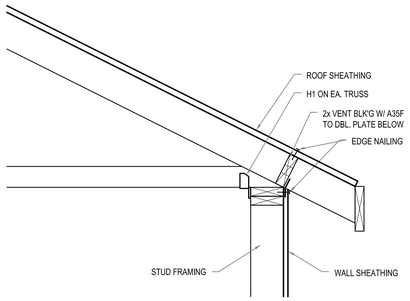

2 ROOF TO WALL DETAIL
SCALE: 1 = 1'-0"

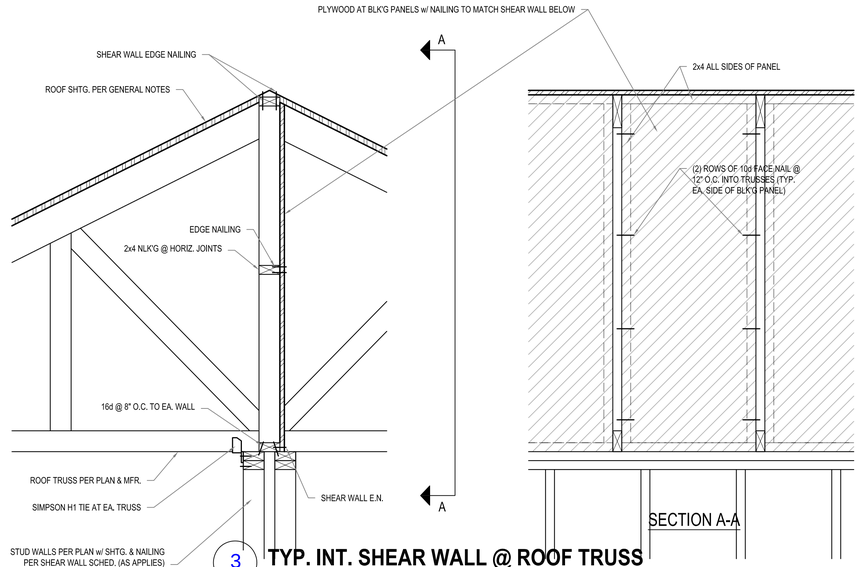

3 TYP. INT. SHEAR WALL @ ROOF TRUSS
SCALE: 1 = 1'-0"

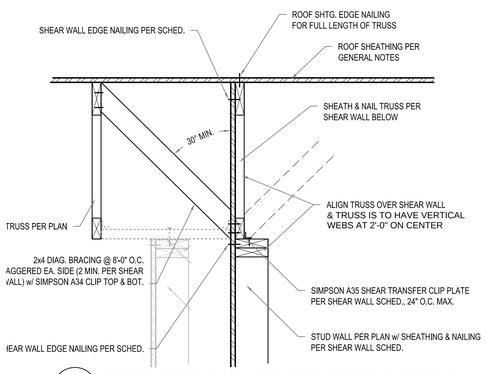

4 TRUSSES PAR. TO INT. SHEAR WALL & GABLE END TRUSS
SCALE: 1 = 1'-0"

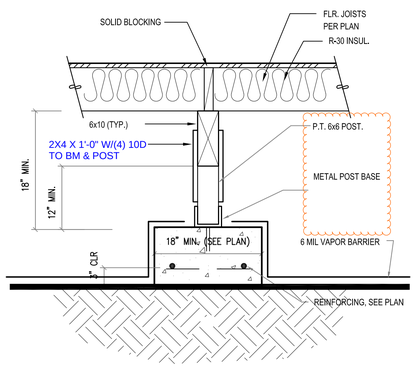

6 FOUNDATION DETAIL
SCALE: 1 = 1'-0"

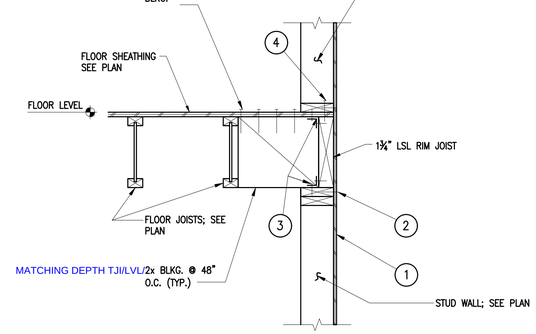

NOTES:
1. SEE 8/S5.5 FOR ITEMS NOT CALLED OUT ON THIS DETAIL AND FOR SHEAR WALL SCHEDULE & HARDWARE.

7 FLOOR JOISTS PARALLEL
NTS

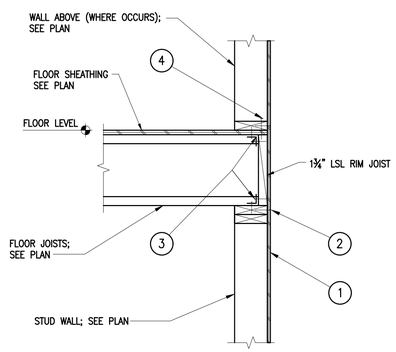

NOTES:
1. SEE 8/S5.5 FOR ITEMS NOT CALLED OUT ON THIS DETAIL AND FOR SHEAR WALL SCHEDULE & HARDWARE.

8 FLOOR JOISTS PERPENDICULAR
NTS

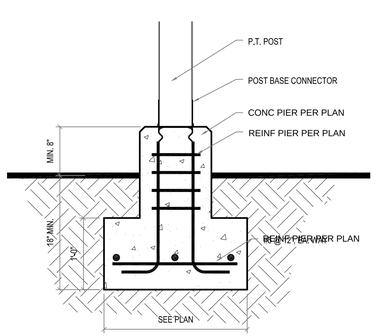

9 EXTERIOR POST FOOTING
SCALE: 1 = 1'-0"

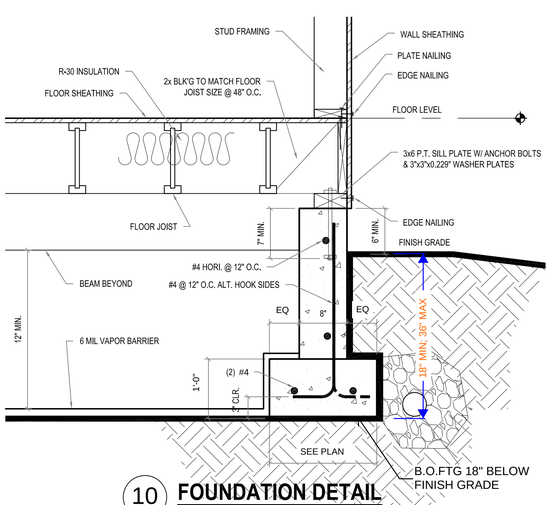

10 FOUNDATION DETAIL
SCALE: 1 = 1'-0"

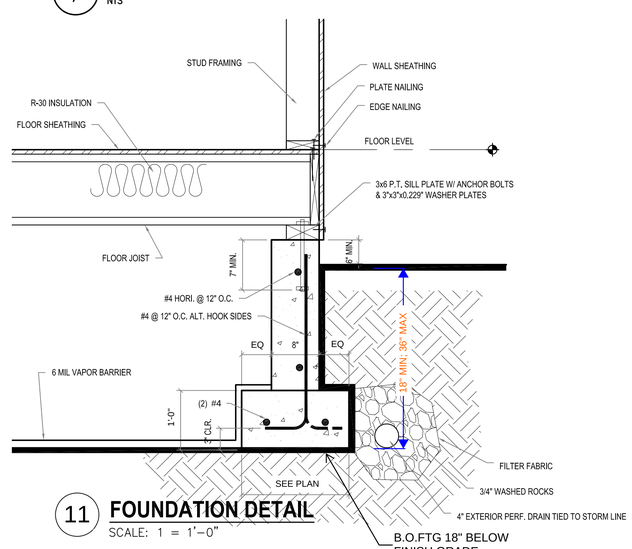

11 FOUNDATION DETAIL
SCALE: 1 = 1'-0"

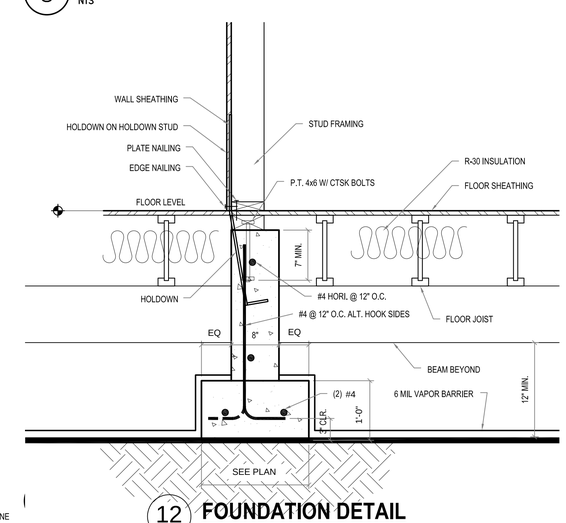

12 FOUNDATION DETAIL
SCALE: 1 = 1'-0"

DHS ENGINEERS
1601 5th Avenue, 1100
Seattle, WA 98101, USA
(206) 734-5858

CHEN RESIDENCE
3869 80TH AVE SE MERCER ISLAND WA 98040

NUMBER	DATE	DESCRIPTION OF REVISIONS
01	09/15/2019	PERMIT SET
02	03/15/2020	PERMIT REVIEW-1
03	07/25/2020	PERMIT REVIEW-1

SHEET TITLE
TYPICAL FRAMING DETAIL

JOB NUMBER

SHEET NUMBER
S5.2

CITY STAMP

HANGER SCHEDULE	
JOIST/BEAM	TYP HANGER
2x12	JB212A
11⅞" TJI210	ITS2.06/11.88
11⅞" TJI360	ITS2.37/11.88
(2) 11⅞" TJI210	MIT4.28/11.88
1¾x11⅞ LVL	BA1.81/11.88 (MIN)
3½x11⅞ PSL	BA3.56/11.88 (MAX)
5¼x11⅞ PSL	HB5.50/11.88
5¼x16 PSL	HGLTV5.516

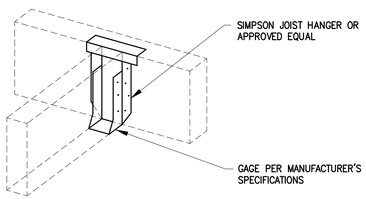

NOTE:
THIS TYPE OF HANGER TO BE USED TYPICAL WHERE APPLICABLE UNLESS NOTED OR SHOWN OTHERWISE ON THE PLANS AND DETAILS. USE SIZE AND TYPE OF NAILS AS REQUIRED BY MANUFACTURER AND FULLY DRIVE IN ALL NAILS.

1 HANGER DETAIL AND SCHEDULE
NTS

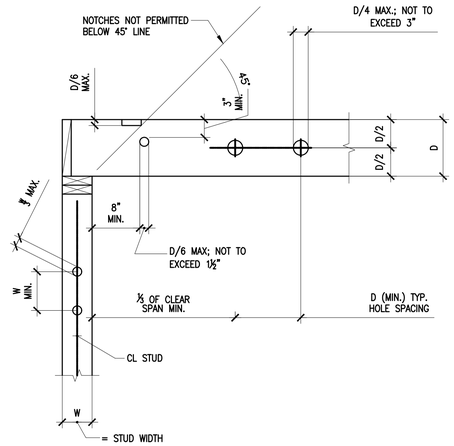

2 ALLOWABLE HOLES & NOTCHES IN JOISTS & STUDS
1"=1'-0"

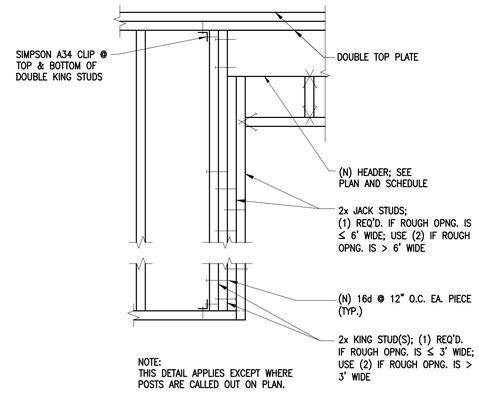

NOTE:
THIS DETAIL APPLIES EXCEPT WHERE POSTS ARE CALLED OUT ON PLAN.

TRADITIONAL HEADER DETAILS

HEADER SCHEDULE		
PLAN DESIGNATION	HEADER SIZE	HANGER DESIGNATION
H44	4x4	HUC44
H46	4x6	HUC46
H48	4x8	HUC48
H410	4x10	HUC410
H412	4x12	HUC412
H414	3½x14 PSL	HUC414
H66	6x6	HUC66
H68	6x8	HUC68
H610	6x10	HUC610
H612	6x12	HUC612
H614	5¼x14 PSL	HUC614

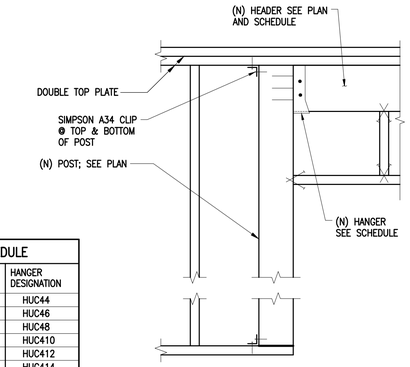

NOTE:
THIS DETAIL APPLIES EXCEPT WHERE (N) POSTS ARE CALLED OUT ON PLAN AT HEADER LOCATIONS.

HEADER DETAILS AT POSTS

3 TYPICAL HEADER DETAILS
1"=1'-0"

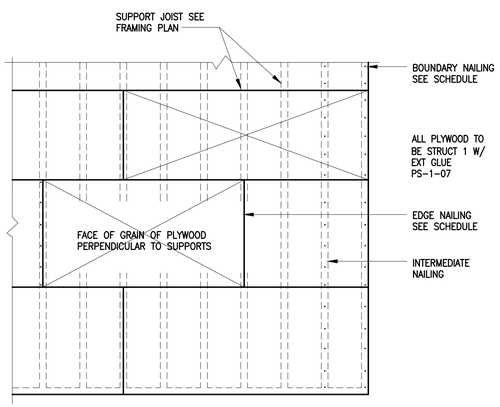

DIAPHRAGM SCHEDULE					
LOCATION	PLYWOOD	PANEL ID	BOUN. NAILS	EDGE NAILS	INTER. NAILS
FLAT ROOF DECK	23/32" STRUCT 1 T&G OSB	40/20	10d @ 4"	10d @ 6"	10d @ 12"
SLOPED ROOF	23/32" STRUCT 1 T&G OSB	40/20	10d @ 4"	10d @ 6"	10d @ 12"
FLOOR	23/32" STRUCT 1 T&G OSB	40/20	10d @ 4"	10d @ 6"	10d @ 12"

NOTES:
1. USE BOUNDARY NAILING AT ALL HIPS, RIDGES, VALLEYS AND OPENINGS.
2. USE COMMON NAIL FOR ALL DIAPHRAGM NAILING.
3. PLYWOOD SHALL BE GLUED (SUB-FLOOR ADHESIVE) FOR FLOORS.
4. USE 23/32" PLYWOOD T & G AT FLAT ROOF.
5. MIN EDGE DISTANCE FOR NAILS SHALL BE ⅜".
6. MIN SHEATHING SHEET SIZE SHALL BE 2'-0"x4'-0".
7. NAILS SHALL NOT BE OVERDRIVEN. OPERATOR TO ADJUST AIR PRESSURE OF PNEUMATIC NAILER AS REQUIRED TO AVOID HEAD OF NAIL PENETRATING SKIN OF PLYWOOD SHEATHING.
8. NAILS SHALL BE COMMON WIRE TYPE.
9. SEE PLANS FOR AREAS OF BLOCKED DIAPHRAGMS.
10. USE BOUNDARY NAILING AT ALL CONNECTIONS TO SHEAR WALLS.

9 ROOF & FLOOR DIAPHRAGM
NTS

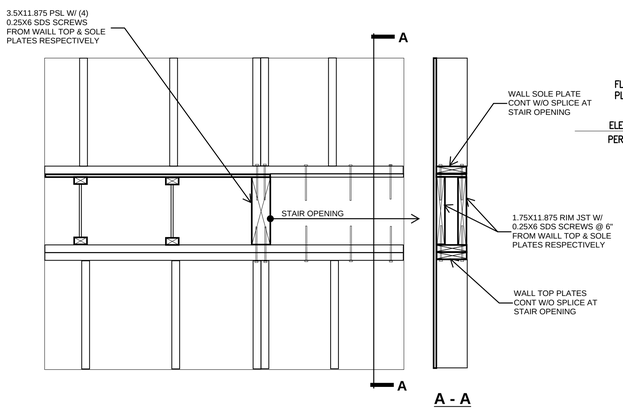

8 EXTERIOR WALL FRAMING AT STAIR OPENING OR FLOOR OPENING
NOT TO SCALE

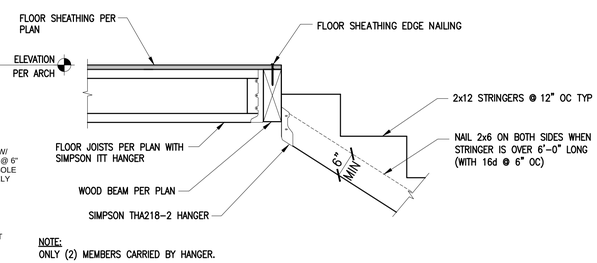

NOTE:
ONLY (2) MEMBERS CARRIED BY HANGER.

ALTERNATE 1

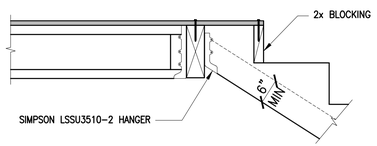

ALTERNATE 2

7 TYPICAL STAIR STRINGER CONN.
SCALE: 1"=1'-0"

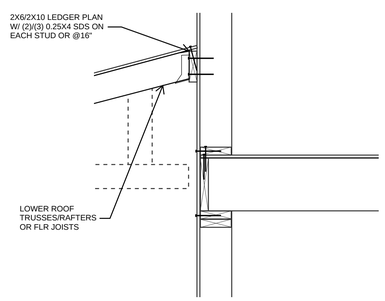

NOTE: SEE GN & TYPICAL FRAMING DETAILS FOR ALL OTHER FRAMING INFO

10 LOWER ROOF FRAMING AT EXTERIOR WALL

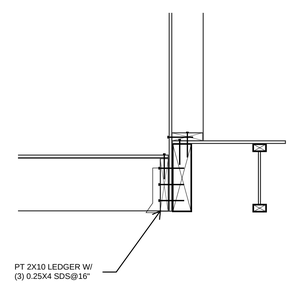

NOTE: SEE GN & TYPICAL FRAMING DETAILS FOR ALL OTHER FRAMING INFO

11 DECK FRAMING AT FLOOR & EXTERIOR WALL

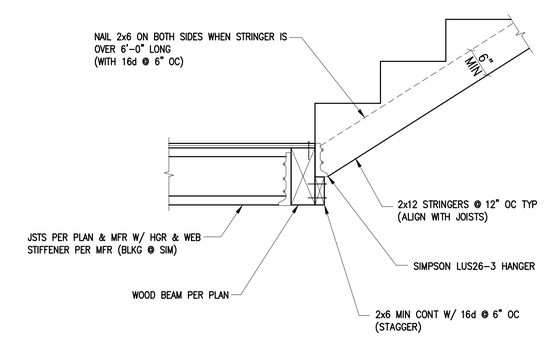

12 TYPICAL STRINGER CONNECTION
SCALE: 1"=1'-0"

DHS ENGINEERS
1601 5th Avenue, 1100
Seattle, WA 98101, USA
(206) 734-5858

DIHONG SHAO
STATE OF WASHINGTON
32333
STRUCTURAL ENGINEER
PROFESSIONAL ENGINEER

CHEN RESIDENCE
3869 80TH AVE SE MERCER ISLAND WA 98040

NUMBER	DATE	DESCRIPTION OF REVISIONS
01	09/15/2019	PERMIT SET
02	03/15/2020	PERMIT REVIEW-1
03	07/25/2020	PERMIT REVIEW-1

SHEET TITLE
TYPICAL FRAMING DETAIL

JOB NUMBER

SHEET NUMBER
S5.3

CITY STAMP

HOLDOWN SCHEDULE					
TYPE	SIMPSON HARDWARE	WALL STUD SIZE; SEE PLAN	STUD SIZE AT HOLDOWN	ANCHOR ROD DIA.	ANCHOR ROD EMBEDMENT (SEE 2/S5.5)
2	HDU2	4" STUDS	4x4*	5/8"	8"
		6" STUDS	4x6*		
4	HDU4	4" STUDS	4x4*	5/8"	9"
		6" STUDS	4x6*		
5	HDU5	4" STUDS	4x4	5/8"	10"
		6" STUDS	4x6		
8	HDU8	4" STUDS	4x4	7/8"	12"
		6" STUDS	4x6		
11	HDU11	4" STUDS	4x4	1"	14"
		6" STUDS	4x6		
14	HDU14	4" STUDS	4x4	1"	14"
		6" STUDS	4x6		

NOTES:
1. SEE PLAN FOR HODOWN TYPES AND LOCATIONS.
2. SEE PLAN FOR TYPICAL STUD SIZES IN SHEARWALLS.
3. REFER TO DETAIL 2/S5.5 FOR TYPICAL HOLDOWN INSTALLATION DETAILS.
4. ALT. USE (2) 2x STUDS.

1 HOLDOWN SCHEDULE
NTS

PROVIDE FULL WIDTH AND DEPTH COMPRESSION BLKG WITH GRAIN ORIENTED VERTICALLY AT ALL FLOOR INTERSTITIAL SPACE AT ALL COLUMN (PER GN) AND HOLOWN LOCATIONS

SHEAR WALL SCHEDULE						
TYPE	STUD SIZE AND SPACING*	PLYWOOD (1) SHEATHING	EDGE NAILS (2) / FIELD NAILS	FRAMING CLIPS (3)	SOLE PLATE NAILING (4)	SILL PLATE BOLTS (5)
2	2x STUDS @ 16" O.C. PER PLAN	15/32" PLYWOOD	10d @ 2" O.C. / 10d @ 12" O.C.	(2)-A35 @ 12" O.C.	16d @ 2½" O.C	5/8" ø BOLTS @ 16" O.C.
3	2x STUDS @ 16" O.C. PER PLAN	15/32" PLYWOOD	10d @ 3" O.C. / 10d @ 12" O.C.	A35 @ 9" O.C.	16d @ 3" O.C.	5/8" ø BOLTS @ 24" O.C.
4	2x STUDS @ 16" O.C. PER PLAN	15/32" PLYWOOD	10d @ 4" O.C. / 10d @ 12" O.C.	A35 @ 12" O.C.	16d @ 4" O.C.	5/8" ø BOLTS @ 32" O.C.
6	2x STUDS @ 16" O.C. PER PLAN	15/32" PLYWOOD	10d @ 6" O.C. / 10d @ 12" O.C.	A35 @ 18" O.C.	16d @ 6" O.C.	5/8" ø BOLTS @ 48" O.C.

NOTES:
1. SEE PLANS FOR SHEAR WALL TYPE, LOCATIONS, AND HOLDOWNS.
2. REFER TO SHEET S5.2 FOR TYPICAL SHEAR WALL CONSTRUCTION DETAILS.
3. REFER TO DETAIL 9/S5.5 FOR TYPICAL SHEAR WALL ELEVATION.
4. REFER TO DETAIL 2/S5.5 FOR TYPICAL HOLDOWN INSTALLATION DETAILS.
5. PLYWOOD SHALL BE PLACED ON THE SIDE OF THE WALL WHERE THE SYMBOL (1) OCCURS ON THE PLAN.
6. ALL INFORMATION IN THE ABOVE SCHEDULE RELATES TO THE ITEMS SHOWN IN THE WALL SECTIONS ON SHEET S5.2. ALL COMPONENTS FOR EACH SHEAR WALL TYPE OCCUR IN THE WALLS BETWEEN THE LEVEL REPRESENTED BY THE FRAMING PLAN, WHERE THE SHEAR WALL TYPES AND LOCATIONS ARE SHOWN, AND THE LEVEL ABOVE.
7. EXAMPLE: A SHEAR WALL SHOWN ON THE GROUND FLOOR PLAN WITH A MARK (1) NEXT TO IT SHALL HAVE ALL REQUIRED COMPONENTS FOR TYPE (1) SHEAR WALL INSTALLED IN THE WALL BETWEEN THE GROUND FLOOR AND THE FIRST FLOOR.
8. AT CONCRETE FOOTINGS, USE 5/8" DIAMETER SILL PLATE BOLTS WITH MINIMUM 7" EMBEDMENT INTO THE CONCRETE. REFER TO THE SCHEDULE ABOVE FOR BOLT SPACING. SEE GENERAL NOTES FOR INFORMATION ABOUT ANCHOR RODS AND EPOXY BOLTS.
9. BLOCK ALL UNSUPPORTED PLYWOOD EDGES WITH MINIMUM 2x LAID FLAT BEHIND EDGES OF PLYWOOD.
10. SEE GENERAL NOTES FOR PLYWOOD GRADES AND SPECIFICATIONS.
11. AT WALLS WITH 2x STUDS, DOUBLE THE STUDS AT PLYWOOD JOINTS PER DETAIL 9/S5.5.

8 SHEARWALL SCHEDULE
NTS

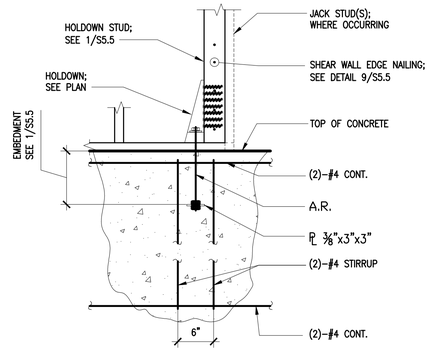

2 TYPICAL HOLDOWN DETAIL
SCALE: 1"=1'-0"

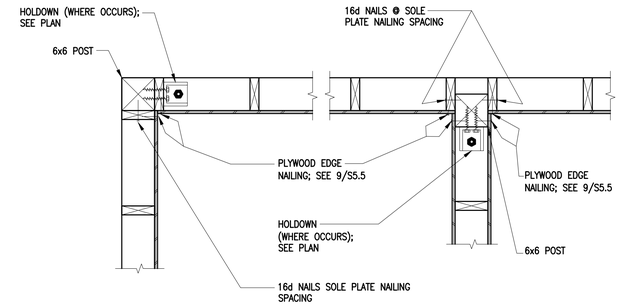

PLAN VIEW

4 SHEARWALL DETAILS AT WALL INTERSECTIONS
SCALE: 1"=1'-0"

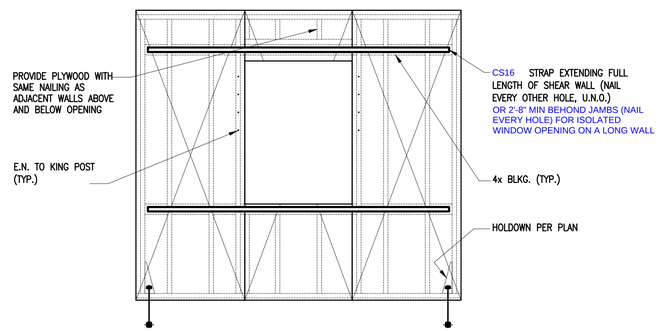

NOTE: HOLDOWN LOCATIONS NOT SHOWN FOR CLARITY.

6 SHEARWALL ELEVATION
1/2"=1'-0"

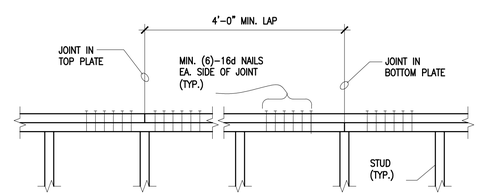

NOTE:
SEE PLAN AND DETAILS FOR SIZE OF STUDS AND DOUBLE TOP PLATE.

7 TYPICAL STUD WALL TOP PLATE SPLICE
1"=1'-0"

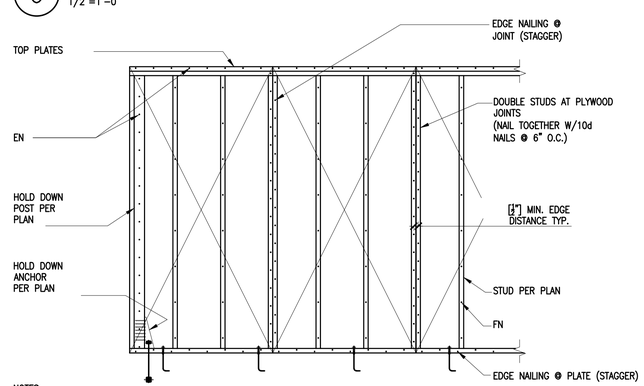

NOTES:
1. FOR ITEMS NOT NOTED SEE PLAN & SHEAR WALL SCHED.
2. MINIMUM PANEL DIMENSION IS 1'-0".
3. USE FULL SIZE PANELS WHERE POSSIBLE.
4. FIELD NAILING (FN) @ 12" UON.
5. [2x] SOLID BLOCKING @ HORIZONTAL JOINTS.

9 TYPICAL SHEARWALL ELEVATION
1/2"=1'-0"

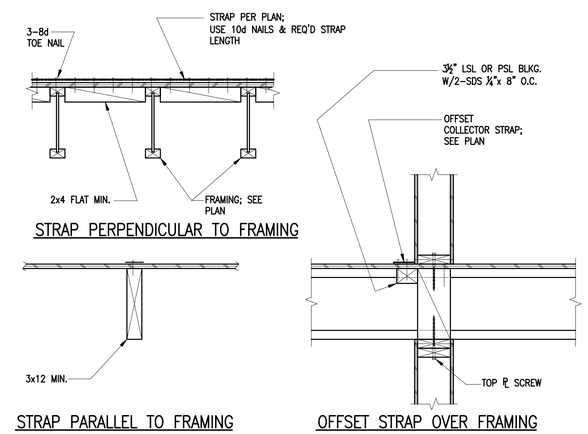

STRAP PERPENDICULAR TO FRAMING

STRAP PARALLEL TO FRAMING

OFFSET STRAP OVER FRAMING

12 HORIZONTAL STRAP DETAIL
NTS

DHS ENGINEERS
1601 5th Avenue, 1100
Seattle, WA 98101, USA
(206) 734-5858

CHEN RESIDENCE
3869 80TH AVE SE MERCER ISLAND WA 98040

NUMBER	DATE	DESCRIPTION OF REVISIONS
01	09/15/2019	PERMIT SET
02	03/15/2020	PERMIT REVIEW-1
03	07/25/2020	PERMIT REVIEW-1

SHEET TITLE
LATERAL DETAIL AND SCHEDULE

JOB NUMBER

SHEET NUMBER
S5.5

CITY STAMP

Tree Protection Assessment Form

Date: 8/22/2019

Site:

Inspector: Tom Hanson

Tree #	Species Common	Species *Scientific*	DBH (inches)	Height (feet)	Crown Ratio (%)	Drip Line(ft) N	S	E	W	Vigor	Viable	Class	Disturbance LOD(ft)	Defects	Recommendations
On Site															
1	White Birch	*Betula Papyrifera*	7.8	10	40	3	5	4	4	Fair	No	Large	4	Bole decay, Poor top sprouting	Planned for Removal
2	Flowering Cherry	*Prunus sp.*	10.2	12	40	7	7	7	7	Fair	Yes	Large	7	Bole Decay	Monitor
3	Blue Spruce	*Picea pungens*	15.6	48	80	10	12	12	8	Good	Yes	Large	11		Protect, Retain
4	Western Red Cedar	*Thuja Plicata*	24.2	46	80	16	16	16	16	Good	Yes	Large	16		Protect, Retain
5	Crab Apple	*Malus coronaria*	8.8	18	90	5	14	6	12	Fair	Yes	Large	9	Multiple sprouts, hangs over St.	Protect, Retain
6	Austrian Pine	*Pinus nigra*	11.4	24	40	8	14	12	10	Fair	Yes	Large	11	Utility pruning	Protect, Retain
7	Arborvitae	*Arborvitae*	6.1	20	100	4	4	4	4	Good	Yes	Large	4		Protect, Retain
8	Arborvitae	*Arborvitae*	6	20	100	4	4	4	4	Good	Yes	Large	4		Protect, Retain
9	Arborvitae	*Arborvitae*	8	20	100	4	4	4	4	Good	Yes	Large	4		Protect, Retain
10	Scots Pine	*Pinus sylvestris*	24.6	22	70	14	20	14	14	Fair	Yes	Large	16	2 Codominants, hangs over St.	Protect, Retain
11	Scots Pine	*Pinus sylvestris*	20.5*	24	70	14	16	14	12	Fair	Yes	Large	14	3 Codominants, hangs over St.	Protect, Retain
12	Red Maple	*Acer rubra*	13.4*	22	80	16	14	16	8	Fair	Yes	Large	14	Poorly pruned	Protect, Retain
13	Flowering Cherry	*Prunus sp.*	6.3	16	70	4	4	4	4	Poor	No	Large	4	Lower trunk decay	Remove
Off Site															
A**	Grand Fir	*Abies grandis*	24	80	80	4	8	16	14	Good	Yes	Large	11		Protect, Retain
B**	Western Red Cedar	*Thuja plicata*	28	75	80	18	18	18	16	Good	Yes	Large	18		Protect, Retain

TREE NOTES

SOURCE: ARBOR INFO REPORT, MARCH 2020

CERTIFIED ARBORIST TO BE ON SITE DURING EXCAVATION ACTIVITIES WITHIN THE DEFINED ROOT ZONE OF ALL TREES.

ALL TREES TO BE RETAINED ARE TO BE FENCED AT THE EDGE OF THE RECOMMENDED TREE PROTECITON ZONE WITH 6-FT HIGH CYCLONE TYPE FENCING (EXCEPT ROW FENCING)

UTILITY LINES SHOULD BE BORED. BORE ACCESS PITS TO BE DEVELOPED WITH 18" BUCKETS OR HAND DUG.

RETAINING WALL FOOTINGS TO BE MINIMALLY DEEP, NO MORE THAN 12-INCHES.

TREE ROOTS OVER 1 1/2" IN DIAMETER ENCOUNTERED IN ALL EXCAVATIONS ARE TO BE CUT CLEANLY TO THE TRENCH WALL WITH CLEAN, SHARP TOOLS. ROOTS TO BE COVERED WITH SOIL OR WETTED BURLAP IF THEY MUST REMAIN EXPOSED.

SUPPLEMENTAL IRRIGATION IS TO BE PROVIDED DURING SUMMER MONTHS (GENERALLY JUNE-SEPTEMBER) FOR ALL TREES IN THE CONSTRUCTION ZONES.

RECOMMEND PROTECTED TREE ROOT ZONES ARE TO BE COVERED WITH 4" OF HOG FUEL AT ALL TIMES. WHERE MACHINERY ACCESS IS NEEDED, THE ROOT ZONES SHOULD BE COVERED WITH 12" OF HOG FUEL, PLYWOOD OR STEEL SHEETS.

STUMPS FOR TREES TO BE REMOVED ARE TO BE GROUND OUT (NOT EXCAVATED).

A CLEARING LIMIT NOTE

ALL SELECTIVE CLEARING, TRENCHING AND OTHER WORK WITHIN THE DRIPLINES OF SIGNIFICANT TREES SHALL BE BY LOW IMPACT/HAND METHODS ONLY AND WORK SHALL BE ADJUSTED AS POSSIBLE TO MINIMIZE ANY DISTURBANCE TO THE SIGNIFICANT AND RETAINED TREES AND PROTECTED UNDERSTORY. CONSTRUCTION MATERIALS AND VEHICLES SHALL NOT BE STORED OUTSIDE THE CLEARING LIMITS.

B TREE DRIPLINE NOTE

WORK WITHIN THE DRIPLINE OF TREES TO BE SAVED MUST BE UNDER THE DIRECTION OF A CERTIFIED ARBORIST (TYP.) SEE ALSO CLEARING LIMIT NOTE ON THIS SHEET.

EROSION CONTROL LEGEND

- LIMITS OF DISTURBANCE
- FILTER FABRIC FENCE (SILT FENCE) (SF)
- STABILIZED CONSTRUCTION ENTRANCE (CE)
- CATCH BASIN INLET PROTECTION (IP)
- INTERCEPTOR SWALE SEE COR DWG 504, TYPE A TEMPORARY SWALE (IS)
- TREE PROTECTION FENCING (TP)
- STOCKPILE (ST)
- STRAW WATTLES (SW) — USE AS NEEDED
- PLASTIC COVERING (PC) — COVER EXPOSED AREAS WITHIN MERCER ISLAND TIME LIMIT
- COMPOST SOCK (CS) — SEDIMENT CONTROL OPTION RECOMMENDED IN LIEU OF SILT FENCE

EROSION CONTROL NOTES

SHEET C1.2

EROSION CONTROL DETAILS

SHEET C1.2

SOIL AMENDMENT REQUIRED

COMPOST AMENDED SOIL REQUIRED ON ALL LANDSCAPED AREAS AFTER CONSTRUCTION. SEE DETAIL ON C1.2.

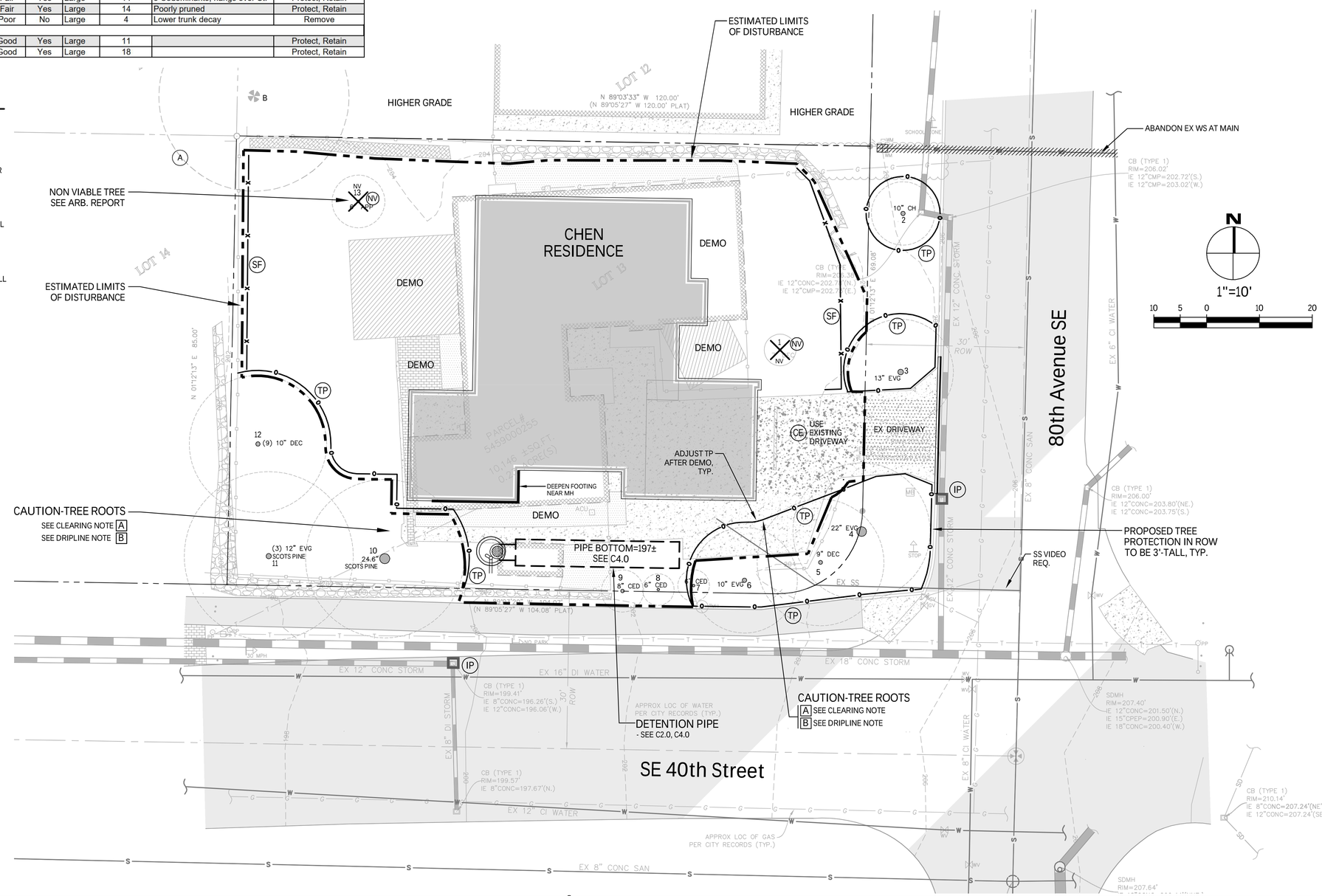

NO.	DATE	BY	REVISIONS

APPLICANT:
CHEN NICK MING HUANG
NICK: 206-769-2078

811 Know what's below. Call before you dig.

DATE: Mar 17, 2020
JOB#: 1863
DRAFTED: CH DESIGN: DE
DIGITAL SIGNATURE

Mar 17, 2020
JEFFREY E. DUFFY
STATE OF WASHINGTON
38786
REGISTERED PROFESSIONAL ENGINEER

CIVIL ENGINEERING SOLUTIONS
102 NW CANAL STREET
PHONE: 206.930.0342
SEATTLE, WA 98107
DUFFY@CESOLUTIONS.US

EROSION CONTROL PLAN

CHEN RESIDENCE
3869 80th AVENUE SE, MERCER ISLAND, WA 98040

DRAWING NO: C1.0

APN 545900-0255
1911-078

SILT FENCE DETAIL — DOE

Figure II-4.2.12 Silt Fence

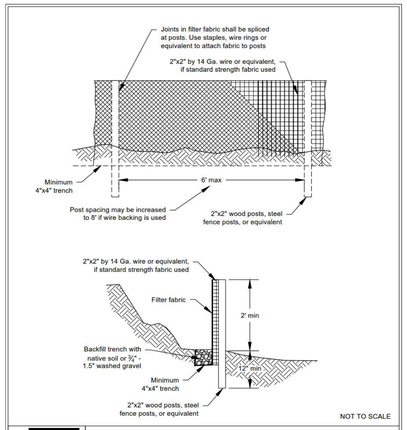

DEPARTMENT OF ECOLOGY State of Washington

Figure II-4.2.12
Silt Fence

Revised October 2014

Please see http://www.ecy.wa.gov/copyright.html for copyright notice including permissions, limitation of liability, and disclaimer.

2014 Stormwater Management Manual for Western Washington

Volume II - Chapter 4 - Page 369

CONSTRUCTION ENTRANCE — DOE

Figure II-4.1.1 Stabilized Construction Entrance

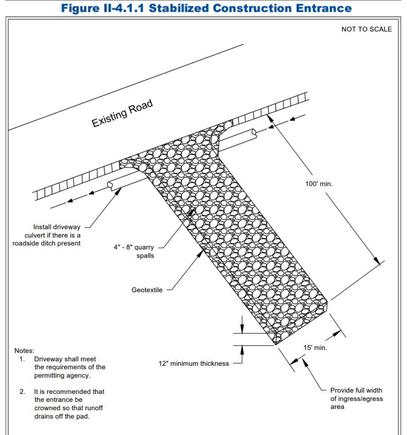

DEPARTMENT OF ECOLOGY State of Washington

Figure II-4.1.1
Stabilized Construction Entrance

Revised June 2015

Please see http://www.ecy.wa.gov/copyright.html for copyright notice including permissions, limitation of liability, and disclaimer.

2014 Stormwater Management Manual for Western Washington

Volume II - Chapter 4 - Page 273

RECOMMENDED CONSTRUCTION SEQUENCE

A DETAILED CONSTRUCTION SEQUENCE IS NEEDED TO ENSURE THAT EROSION AND SEDIMENT CONTROL MEASURES ARE APPLIED AT THE APPROPRIATE TIMES. A RECOMMENDED CONSTRUCTION SEQUENCE IS PROVIDED BELOW:

1. HOLD AN ONSITE PRE-CONSTRUCTION MEETING.

2. POST SIGN WITH NAME AND PHONE NUMBER OF ESC SUPERVISOR (MAY BE CONSOLIDATED WITH THE REQUIRED NOTICE OF CONSTRUCTION SIGN).

3. FLAG OR FENCE CLEARING LIMITS.

4. INSTALL CATCH BASIN PROTECTION, IF REQUIRED.

5. GRADE AND INSTALL CONSTRUCTION ENTRANCE(S).

6. INSTALL PERIMETER PROTECTION (SILT FENCE, BRUSH BARRIER, ETC.).

7. CONSTRUCT SEDIMENT PONDS AND TRAPS.

8. GRADE AND STABILIZE CONSTRUCTION ROADS.

9. CONSTRUCT SURFACE WATER CONTROLS (INTERCEPTOR DIKES, PIPE SLOPE DRAINS, ETC.) SIMULTANEOUSLY WITH CLEARING AND GRADING FOR PROJECT DEVELOPMENT.

10. MAINTAIN EROSION CONTROL MEASURES IN ACCORDANCE WITH CITY OF MERCER ISLAND STANDARDS AND MANUFACTURER'S RECOMMENDATIONS.

11. RELOCATE SURFACE SURFACE WATER CONTROLS OR TESC MEASURES, OR INSTALL NEW MEASURES SO THAT AS SITE CONDITIONS CHANGE, THE TESC IS ALWAYS IN ACCORDANCE WITH CITY OF MERCER ISLAND TESC REQUIREMENTS.

12. COVER ALL AREAS THAT WILL BE UN-WORKED FOR MORE THAN SEVEN DAYS DURING THE DRY SEASON (MAY 1 TO SEPT 30) OR TWO DAYS DURING THE WET SEASON (OCT 1 TO APRIL 30) WITH STRAW, WOOD FIBER MULCH, COMPOST, PLASTIC SHEETING, OR EQUIVALENT.

13. STABILIZE ALL AREAS WITHIN SEVEN DAYS OF REACHING FINAL GRADE.

14. SEED, SOD, STABILIZE, OR COVER ANY AREAS TO REMAIN UNWORKED FOR MORE THAN 30 DAYS.

15. UPON COMPLETION OF THE PROJECT, STABILIZE ALL DISTURBED AREAS AND REMOVE BMPS IF APPROPRIATE.

DENUDED AREAS REQUIREMENTS

APRIL 1 TO SEPT 30
ALL DENUDED AREAS MUST BE STABILIZED WITHIN 7 DAYS OF CONSTRUCTION. PLEASE READ ALL CITY TESC NOTES ON SHEET C1.2.

OCT 1 TO MARCH 31
ALL DENUDED AREAS MUST BE STABILIZED WITHIN 2 DAYS OF GRADING. IF AN EROSION PROBLEM ALREADY EXISTS ON THE SITE, OTHER COVER PROTECTION AND EROSION CONTROL WILL BE REQUIRED.

EROSION CONTROL NOTES

D.8.2 STANDARD ESC PLAN NOTES
THE STANDARD ESC PLAN NOTES MUST BE INCLUDED ON ALL ESC PLANS. AT THE APPLICANT'S DISCRETION, NOTES THAT IN NO WAY APPLY TO THE PROJECT MAY BE OMITTED; HOWEVER, THE REMAINING NOTES MUST NOT BE RENUMBERED. FOR EXAMPLE, IF ESC NOTE #3 WERE OMITTED, THE REMAINING NOTES SHOULD BE NUMBERED 1, 2, 4, 5, 6, ETC.

1. APPROVAL OF THIS EROSION AND SEDIMENTATION CONTROL (ESC) PLAN DOES NOT CONSTITUTE AN APPROVAL OF PERMANENT ROAD OR DRAINAGE DESIGN (E.G., SIZE AND LOCATION OF ROADS, PIPES, RESTRICTORS, CHANNELS, RETENTION FACILITIES, UTILITIES, ETC.).

2. THE IMPLEMENTATION OF THESE ESC PLANS AND THE CONSTRUCTION, MAINTENANCE, REPLACEMENT, AND
UPGRADING OF THESE ESC FACILITIES IS THE RESPONSIBILITY OF THE APPLICANT/ESC SUPERVISOR UNTIL ALL CONSTRUCTION IS APPROVED.

3. THE BOUNDARIES OF THE CLEARING LIMITS SHOWN ON THIS PLAN SHALL BE CLEARLY FLAGGED BY SURVEY TAPE OR FENCING, IF REQUIRED, PRIOR TO CONSTRUCTION (SWDM APPENDIX D). DURING THE CONSTRUCTION PERIOD, NO DISTURBANCE BEYOND THE CLEARING LIMITS SHALL BE PERMITTED. THE CLEARING LIMITS SHALL BE MAINTAINED BY THE APPLICANT/ESC SUPERVISOR FOR THE DURATION OF CONSTRUCTION.

4. STABILIZED CONSTRUCTION ENTRANCES SHALL BE INSTALLED AT THE BEGINNING OF CONSTRUCTION AND MAINTAINED FOR THE DURATION OF THE PROJECT. ADDITIONAL MEASURES, SUCH AS CONSTRUCTED WHEEL WASH SYSTEMS OR WASH PADS, MAY BE REQUIRED TO ENSURE THAT ALL PAVED AREAS ARE KEPT CLEAN AND TRACK OUT TO ROAD RIGHT OF WAY DOES NOT OCCUR FOR THE DURATION OF THE PROJECT.

5. THE ESC FACILITIES SHOWN ON THIS PLAN MUST BE CONSTRUCTED PRIOR TO OR IN CONJUNCTION WITH ALL CLEARING AND GRADING SO AS TO ENSURE THAT THE TRANSPORT OF SEDIMENT TO SURFACE WATERS, DRAINAGE SYSTEMS, AND ADJACENT PROPERTIES IS MINIMIZED.

6. THE ESC FACILITIES SHOWN ON THIS PLAN ARE THE MINIMUM REQUIREMENTS FOR ANTICIPATED SITE CONDITIONS. DURING THE CONSTRUCTION PERIOD, THESE ESC FACILITIES SHALL BE UPGRADED AS NEEDED FOR UNEXPECTED STORM EVENTS AND MODIFIED TO ACCOUNT FOR CHANGING SITE CONDITIONS (E.G. ADDITIONAL COVER MEASURES, ADDITIONAL SUMP PUMPS, RELOCATION OF DITCHES AND SILT FENCES, PERIMETER PROTECTION ETC.) AS DIRECTED BY CITY OF MERCER ISLAND.

7. THE ESC FACILITIES SHALL BE INSPECTED DAILY BY THE APPLICANT/ESC SUPERVISOR AND MAINTAINED TO ENSURE CONTINUED PROPER FUNCTIONING. WRITTEN RECORDS SHALL BE KEPT OF WEEKLY REVIEWS OF THE ESC FACILITIES.

8. ANY AREAS OF EXPOSED SOILS, INCLUDING ROADWAY EMBANKMENTS, THAT WILL NOT BE DISTURBED FOR TWO CONSECUTIVE DAYS DURING THE WET SEASON OR SEVEN DAYS DURING THE DRY SEASON SHALL BE IMMEDIATELY STABILIZED WITH THE APPROVED ESC METHODS (E.G., SEEDING, MULCHING, PLASTIC COVERING, ETC.).

9. ANY AREA NEEDING ESC MEASURES THAT DO NOT REQUIRE IMMEDIATE ATTENTION SHALL BE ADDRESSED WITHIN SEVEN (7) DAYS.

10. THE ESC FACILITIES ON INACTIVE SITES SHALL BE INSPECTED AND MAINTAINED A MINIMUM OF ONCE A MONTH DURING THE DRY SEASON, BI-MONTHLY DURING THE WET SEASON, OR WITHIN TWENTY FOUR (24) HOURS FOLLOWING A STORM EVENT.

11. AT NO TIME SHALL MORE THAN ONE (1) FOOT OF SEDIMENT BE ALLOWED TO ACCUMULATE WITHIN A CATCH BASIN. ALL CATCH BASINS AND CONVEYANCE LINES SHALL BE CLEANED PRIOR TO PAVING. THE CLEANING OPERATION SHALL NOT FLUSH SEDIMENT-LADEN WATER INTO THE DOWNSTREAM SYSTEM.

12. ANY PERMANENT RETENTION/DETENTION FACILITY USED AS A TEMPORARY SETTLING BASIN SHALL BE MODIFIED WITH THE NECESSARY EROSION CONTROL MEASURES AND SHALL PROVIDE ADEQUATE STORAGE CAPACITY. IF THE FACILITY IS TO FUNCTION ULTIMATELY AS AN INFILTRATION SYSTEM, THE TEMPORARY FACILITY MUST BE ROUGH GRADED SO THAT THE BOTTOM AND SIDES ARE AT LEAST THREE FEET ABOVE THE FINAL GRADE OF THE PERMANENT FACILITY.

13. COVER MEASURES WILL BE APPLIED IN CONFORMANCE WITH APPENDIX D OF THE SURFACE WATER DESIGN MANUAL

14. PRIOR TO THE BEGINNING OF THE WET SEASON (OCT. 1), ALL DISTURBED AREAS SHALL BE REVIEWED TO IDENTIFY WHICH ONES CAN BE SEEDED IN PREPARATION FOR THE WINTER RAINS. DISTURBED AREAS SHALL BE SEEDED WITHIN ONE WEEK OF THE BEGINNING OF THE WET SEASON.

CITY NOTES

1. ANY CHANGES TO THE APPROVED PLANS REQUIRES CITY APPROVAL THROUGH A REVISION.

2. APPLICANT IS RESPONSIBLE FOR ANY DAMAGES TO UNDERGROUND UTILITIES CAUSED FROM THIS CONSTRUCTION.

3. CATCH BASIN FILTERS SHOULD BE PROVIDED FOR ALL STORM DRAIN CATCH BASINS/INLETS DOWNSLOPE AND WITHIN 500 FEET OF THE CONSTRUCTION AREA. CATCH BASIN FILTERS SHOULD BE DESIGNED BY THE MANUFACTURER FOR USE AT CONSTRUCTION SITES AND APPROVED BY THE CITY INSPECTOR. CATCH BASIN FILTERS SHOULD BE INSPECTED FREQUENTLY, ESPECIALLY AFTER STORM EVENTS. IF THE FILTER BECOMES CLOGGED, IT SHOULD BE CLEANED OR REPLACED.

4. CONTRACTORS SHALL VERIFY LOCATIONS AND DEPTHS OF UTILITES.

5. AT LEAST 48 HOURS PRIOR TO CONSTRUCTION, CALL "ONE CALL" AT 1.800.424.5555

6. DO NOT BACKFILL WITH NATIVE MATERIAL ON PUBLIC RIGHT-OF-WAY. ALL MATERIAL MUST BE IMPORTED

7. EROSION CONTROL: ALL "LAND DISTURBING ACTIVITY" IS SUBJECT TO PROVISIONS OF MERCER ISLAND ORDINANCE 95C-118 "STORM WATER MANAGEMENT." SPECIFIC ITEMS TO BE FOLLOWED AT YOUR SITE:

8. PROTECT ADJACENT PROPERTIES FROM ANY INCREASED RUNOFF OR SEDIMENTATION DUE TO THE CONSTRUCTION PROJECT THROUGH THE USE OF APPROPRIATE "BEST MANAGEMENT PRACTICES" (BMP) EXAMPLES INCLUDE, BUT ARE NOT LIMITED TO, SEDIMENT TRAPS, SEDIMENT PONDS, FILTER FABRIC FENCES, VEGETATIVE BUFFER STRIPS OR BIOENGINEERED SWALES.

9. CONSTRUCTION ACCESS TO THE SITE SHOULD BE LIMITED TO ONE ROUTE. STABILIZE ENTRANCE WITH QUARRY SPALLS TO PREVENT SEDIMENT FROM LEAVING THE SITE OR ENTERING THE STORM DRAINS.

10. PREVENT SEDIMENT, CONSTRUCTION DEBRIS, PAINTS, SOLVENTS, ETC., OR OTHER TYPES OF POLLUTION FROM ENTERING PUBLIC STORM DRAINS. KEEP ALL POLLUTION ON YOUR SITE.

11. ALL EXPOSED SOILS SHALL REMAIN DENUDED FOR NO LONGER THAN SEVEN (7) DAYS AND SHALL BE STABILIZED WITH MULCH, HAY, OR THE APPROPRIATE GROUND COVER. ALL EXPOSED SOILS SHALL BE COVERED IMMEDIATELY DURING ANY RAIN EVENT.

12. INSTALLATION OF CONCRETE DRIVEWAYS, TREES, SHRUBS, IRRIGATION, BOULDERS, BERMS, WALLS, GATES, AND OTHER IMPROVEMENTS ARE NOT ALLOWED IN THE PUBLIC RIGHT-OF-WAY WITHOUT PRIOR APPROVAL, AND AN ENCROACHMENT AGREEMENT AND RIGHT OF WAY PERMIT FROM THE SENIOR DEVELOPMENT ENGINEER.

13. OWNER SHALL CONTROL DISCHARGE OF SURFACE DRAINAGE RUNOFF FROM EXISTING AND NEW IMPERVIOUS AREAS IN A RESPONSIBLE MANNER. CONSTRUCTION OF NEW GUTTERS AND DOWNSPOUTS, DRY WELLS, LEVEL SPREADERS OR DOWNSTREAM CONVEYANCE PIPE MAY BE NECESSARY TO MINIMIZE DRAINAGE IMPACT TO YOUR NEIGHBORS. CONSTRUCTION OF MINIMUM DRAINAGE IMPROVEMENTS SHOWN OR CALLED OUT ON THIS PLAN DOES NOT IMPLY RELIEF FROM CIVIL LIABILITY FOR YOUR DOWNSTREAM DRAINAGE.

14. POT HOLING THE PUBLIC UTILITIES IS REQUIRED PRIOR TO ANY GRADING ACTIVITIES LESS THAN 6" OVER THE PUBLIC MAINS (WATER, SEWER AND STORM SYSTEMS). IF THERE IS A CONFLICT, THE APPLICANT IS REQUIRED TO SUBMIT A REVISION FOR APPROVAL PRIOR TO ANY GRADING ACTIVITIES OVER THE PUBLIC MAINS.

15. REMEMBER: EROSION CONTROL IS YOUR FIRST INSPECTION.

16. ROOF DRAINS MUST BE CONNECTED TO THE STORM DRAIN SYSTEM AND INSPECTED BY THE PUBLIC WORKS DEPARTMENT PRIOR TO ANY BACKFILLING OF PIPE.

17. SILENT FENCE: CLEAN AND PROVIDE REGULAR MAINTENANCE OF THE SILT FENCE. THE FENCE IS TO REMAIN VERTICAL AND IS TO FUNCTION PROPERLY THROUGHOUT THE TERM OF THE PROJECT.

18. WORK IN PUBLIC RIGHT OF WAY REQUIRES A RIGHT-OF-WAY USE PERMIT.

19. REFER TO WATER SERVICE PERMIT FOR ACTUAL LOCATION OF NEW WATER METER AND SERVICE LINE DETERMINED BY MERCER ISLAND WATER DEPARTMENT.

16. THE TV INSPECTION OF THE EXISTING SIDE SEWER TO THE CITY SEWER MAIN IS REQUIRED. IF THE RESULT OF THE TV INSPECTION IS NOT IN SATISFACTORY CONDITION, AS DETERMINED BY THE CITY OF MERCER ISLAND INSPECTOR, THE REPLACEMENT OF THE EXISTING SIDE SEWER IS REQUIRED. ALTERNATELY, A PRESSURE TEST OF THE SIDE SEWER, FROM SEWER MAIN TO POINT OF CONNECTION, MAY BE SUBSTITUTED FOR THE VIDEO INSPECTION.

20. NEWLY INSTALLED SIDE SEWER REQUIRES A 4 P.S.I. AIR TEST OR PROVIDE 10' OF HYDROSTATIC HEAD TEST.

21. POT HOLING THE PUBLIC UTILITIES IS REQUIRED PRIOR TO ANY GRADING ACTIVITIES LESS THAN 6" OVER THE PUBLIC MAINS (WATER, SEWER AND STORM SYSTEMS). IF THERE IS A CONFLICT, THE APPLICANT IS REQUIRED TO SUBMIT A REVISION FOR APPROVAL PRIOR TO ANY GRADING ACTIVITIES OVER THE PUBLIC MAINS.

22. THE LIMITS AND EXTENDS OF THE PAVEMENT IN THE PUBLIC RIGHT OF WAY SHALL BE DETERMINED BY THE CITY ENGINEER PRIOR TO FINALIZE THE PROJECT.

NO.	DATE	BY	REVISIONS

APPLICANT:
CHEN NICK MING HUANG
NICK: 206-769-2078

811 Know what's below. Call before you dig.

DATE: Mar 17, 2020
JOB# 1863
DRAFTED: CH DESIGN: DE
DIGITAL SIGNATURE

Mar 17, 2020
JEFFREY E. DUFFY — STATE OF WASHINGTON — 39788 — REGISTERED PROFESSIONAL ENGINEER

CIVIL ENGINEERING SOLUTIONS
102 NW CANAL STREET SEATTLE, WA 98107
PHONE: 206.930.0342 DUFFY@CESOLUTIONS.US

TESC & CITY NOTES
TESC DETAILS

CHEN RESIDENCE
3869 80th AVENUE SE, MERCER ISLAND, WA 98040

DRAWING NO:
C1.2

APN 545900-0255
1911-078

SANITARY SEWER IMPROVEMENTS

1 -

2 6" SDR 35 PVC SANITARY SEWER(SS) @ MIN 1.0%.

3 -

4 -

7 -LOCATE AND VIDEO CONDITION OF EXISTING SANITARY SIDE SEWER. REPLACE LINE IF FOUND DEFECTIVE AS DETERMINED BY CITY INSPECTOR.

WATER IMPROVEMENTS

10 NEW SF RESIDENTIAL WATER SERVICE & METER PIT. CONFIRM REQUIRED SIZE WITH BUILDING PERMIT REVIEW. INSTALL PER MERCER ISLAND DETAIL W-13, W-14, OR W-14A DEPENDING ON SIZE REQUIREMENT.

11 MIN 1.5" 250 PSI PRIVATE HDPE WATER (ASTM D2239) FROM METER TO HOUSE. RECOMMENDED DEPTH=36". COORDINATE HOUSE ENTRY WITH BUILDER/OWNER.

12 -

14 -

STORM DRAIN

20 4" STORM DRAIN (3034 PVC) @ MIN 2% GRADE

21 4" FOUNDATION DRAIN (3034 PVC) @ MIN 1% GRADE

22 6" STORM DRAIN (3034 PVC) @ MIN 2% GRADE

23 -

24 -

25 -

26 -

28 -

29 -

STORM DRAIN STRUCTURES

30 -

31 -

32 -

33 -

34 -

35 -

36 NDS DURASLOPE CHANNEL DRAIN OR EQUAL. MINIMUM 6" CHANNEL. CLASS B VEHICLE RATED GRATE.

39 -

40 -TYPE 40 CATCH BASIN OR EQUAL. FOR WQ, ADD WATER QUALITY TEE TO EXITING PIPE (OR DOWNTURNED ELBOW).

41 -54" ID TYPE 2 MH CONTROL STRUCTURE WITH SOLID LID. SEE ALL DETAILS AND PROFILE C4.0.

43 -

46 -

47 -DETENTION PIPE: ALUMINIZED CMP @ 0.5% GRADE. SEE PLAN FOR SIZE AND CONFIGURATION. SEE PROFILE, NOTES, AND DETAILS ON C4.0.

48 -

SOIL AMENDMENT REQUIRED

COMPOST AMENDED SOIL REQUIRED ON ALL LANDSCAPED AREAS AFTER CONSTRUCTION. SEE DETAIL ON C3.5.

TREE NOTES

SOURCE: ARBOR INFO REPORT, MARCH 2020

CERTIFIED ARBORIST TO BE ON SITE DURING EXCAVATION ACTIVITIES WITHIN THE DEFINED ROOT ZONE OF ALL TREES.

ALL TREES TO BE RETAINED ARE TO BE FENCED AT THE EDGE OF THE RECOMMENDED TREE PROTECITON ZONE WITH 6-FT HIGH CYCLONE TYPE FENCING (EXCEPT ROW FENCING)

UTILITY LINES SHOULD BE BORED. BORE ACCESS PITS TO BE DEVELOPED WITH 18" BUCKETS OR HAND DUG.

RETAINING WALL FOOTINGS TO BE MINIMALLY DEEP, NO MORE THAN 12-INCHES.

TREE ROOTS OVER 1 1/2" IN DIAMETER ENCOUNTERED IN ALL EXCAVATIONS ARE TO BE CUT CLEANLY TO THE TRENCH WALL WITH CLEAN, SHARP TOOLS. ROOTS TO BE COVERED WITH SOIL OR WETTED BURLAP IF THEY MUST REMAIN EXPOSED.

SUPPLEMENTAL IRRIGATION IS TO BE PROVIDED DURING SUMMER MONTHS (GENERALLY JUNE-SEPTEMBER) FOR ALL TREES IN THE CONSTRUCTION ZONES.

RECOMMEND PROTECTED TREE ROOT ZONES ARE TO BE COVERED WITH 4" OF HOG FUEL AT ALL TIMES. WHERE MACHINERY ACCESS IS NEEDED, THE ROOT ZONES SHOULD BE COVERED WITH 12" OF HOG FUEL, PLYWOOD OR STEEL SHEETS.

STUMPS FOR TREES TO BE REMOVED ARE TO BE GROUND OUT (NOT EXCAVATED).

STORM BMP's

COMPOSTED AMENDED SOIL IS REQUIRED FOR DISTURBED AREAS. SEE DETAIL ON C3.5.

STORM BMP'S ARE NOT PROPOSED FOR PROJECT. SEE STORM REPORT.

SOILS

SITE IS IN AN AREA MAPPED "INFILTRATING LID FACILITIES MAY BE FEASIBLE, AND SOIL HAS MODERATE INFILTRATION POTENTIAL" ON THE "LOW IMPACT DEVELOPMENT INFILTRATION FEASIBILITY ON MERCER ISLAND" MAP

SURVEYOR

TOPOGRAPHIC SURVEY BY:
TERRANE
10801 MAIN STREET, SUITE 102
BELLEVUE, WA 98004
PHONE 425.458.4488
www.terrane.net

LEGAL DESCRIPTION

(PER QUIT CLAIM DEED RECORDING #20160817001318)

LOT 13, BLOCK 11, MERCERDALE NO. 2, ACCORDING TO THE PLAT THEREOF RECORDED IN VOLUME 60 OF PLATS, PAGE 28, IN KING COUNTY, WASHINGTON.

SITUATE IN THE COUNTY OF KING, STATE OF WASHINGTON.

VERTICAL DATUM

NAVD 88 PER SURVEY

A CLEARING LIMIT NOTE

ALL SELECTIVE CLEARING, TRENCHING AND OTHER WORK WITHIN THE DRIPLINES OF SIGNIFICANT TREES SHALL BE BY LOW IMPACT/HAND METHODS ONLY AND WORK SHALL BE ADJUSTED AS POSSIBLE TO MINIMIZE ANY DISTURBANCE TO THE SIGNIFICANT AND RETAINED TREES AND PROTECTED UNDERSTORY. CONSTRUCTION MATERIALS AND VEHICLES SHALL NOT BE STORED OUTSIDE THE CLEARING LIMITS.

B TREE DRIPLINE NOTE

WORK WITHIN THE DRIPLINE OF TREES TO BE SAVED MUST BE UNDER THE DIRECTION OF A CERTIFIED ARBORIST (TYP.) SEE ALSO CLEARING LIMIT NOTE ON THIS SHEET.

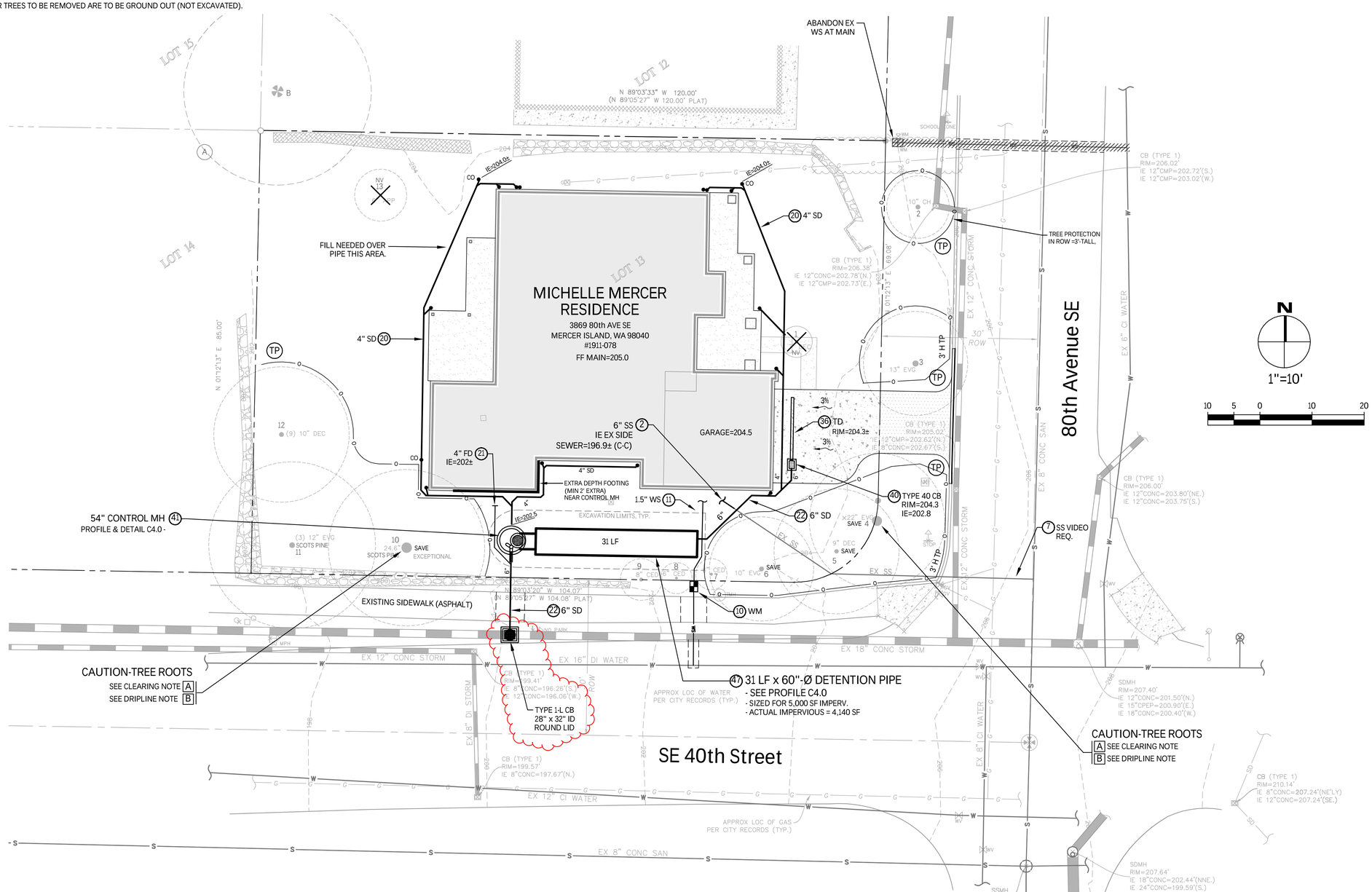

NO.	DATE	BY	REVISIONS

APPLICANT:
CHEN NICK MING HUANG
NICK: 206-769-2078

811 Know what's below. Call before you dig.

DATE: Apr 01, 2020
JOB# 1863
DRAFTED: DE DESIGN: DE
DIGITAL SIGNATURE

Apr 01, 2020
JEFFREY E. RALPH
STATE OF WASHINGTON
30766
REGISTERED PROFESSIONAL ENGINEER

CIVIL ENGINEERING SOLUTIONS
102 NW CANAL STREET
PHONE: 206.930.0342
SEATTLE, WA 98107
DUFFY@CESOLUTIONS.US

DRAINAGE / CIVIL PLAN TREE PLAN

CHEN RESIDENCE
3869 80th AVENUE SE, MERCER ISLAND, WA 98040

DRAWING NO:
C2.0

APN 545900-0255
1911-078

SOIL AMENDMENT REQUIRED

COMPOST AMENDED SOIL REQUIRED ON ALL LANDSCAPED AREAS AFTER CONSTRUCTION. SEE DETAIL ON C3.5.

SOIL INSPECTION REQUIRED BY ENGINEER

A POST CONSTRUCTION INSPECTION & CERTIFICATION OF AMENDED SOILS IS REQUIRED BY A LICENSED CIVIL ENGINEER. THIS IS REQUIRED BEFORE FINAL SIGN-OFF BY CITY.

COMPOST AMENDED SOIL SPEC

AMENDMENT FOR LANDSCAPED AREAS

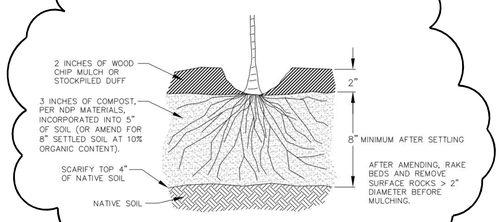

~~SOIL AMENDMENT FOR GRASS OR TURF AREAS~~

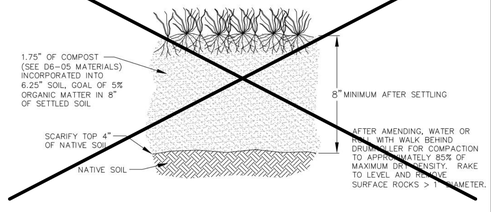

NOTES:

1. AMEND SOILS PER DOE MANUAL, VOL. V, 5.3.1, BMP T5.13, (2012 OR CURRENT) OR WWW.SOILSFORSALMON.ORG.
2. DO NOT AMEND SOILS IN AREAS WITH UNDISTURBED SOIL AND NATIVE VEGETATION.
3. OPTIONAL ALTERNATIVE: STOCKPILE NATIVE TOPSOIL ONSITE, AMEND IF NEEDED, AND REPLACE BEFORE PLANTING.
4. OPTIONAL ALTERNATIVE: IMPORT TOPSOIL MIX OF SUFFICIENT ORGANIC CONTENT AND DEPTH TO MEET REQUIREMENTS.

JANUARY 2017 NO SCALE

~~City of Bellevue~~ STORM AND SURFACE WATER UTILITY

TITLE

AMENDED SOILS

NO. ~~NDP-1~~

NO.	DATE	BY	REVISIONS

APPLICANT:
CHEN NICK MING HUANG
NICK: 206-769-2078

811 Know what's below. Call before you dig.

DATE: Mar 17, 2020
JOB# 1863
DRAFTED: SS DESIGN: SS
DIGITAL SIGNATURE

Mar 17, 2020
JEFFREY E. HALLIS
STATE OF WASHINGTON
39766
REGISTERED PROFESSIONAL ENGINEER

CIVIL ENGINEERING SOLUTIONS
102 NW CANAL STREET SEATTLE, WA 98107
PHONE: 206.930.0342 DUFFY@CESOLUTIONS.US

DRAINAGE DETAIL

CHEN RESIDENCE
3869 80th AVENUE SE, MERCER ISLAND, WA 98040

DRAWING NO:
C3.5

APN 545900-0255
1911-078

PRIVATE STORM DRAIN PROFILE

SCALE: HORIZONTAL 1"=10', VERTICAL 1"=5'

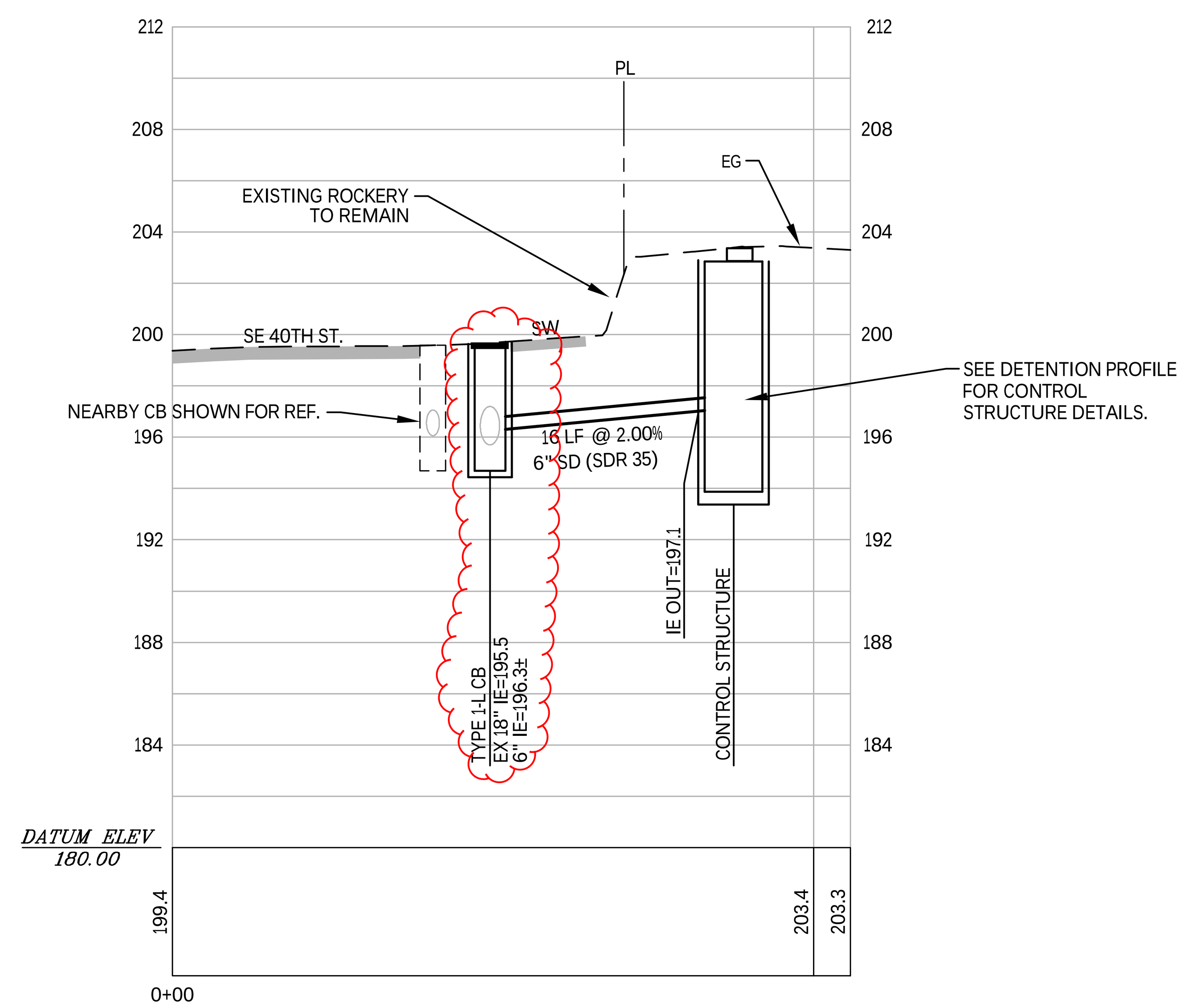

MERCER ISLAND DETENTION "TABLE 1"

Table 1

ON-SITE DETENTION DESIGN FOR PROJECTS BETWEEN 500 SF AND 9,500 SF NEW PLUS REPLACED IMPERVIOUS SURFACE AREA

New and Replaced Impervious Surface Area (sf)	Detention Pipe Diameter (in)	Detention Pipe Length (ft)		Lowest Orifice Diameter (in)(3)		Distance from Outlet Invert to Second Orifice (ft)		Second Orifice Diameter (in)	
		~~B soils~~	C soils	~~B soils~~	C soils	~~B soils~~	C soils	~~B soils~~	C soils
500 to 1,000 sf	36"	30	22	0.5	0.5	2.2	2.0	0.5	0.8
	48"	18	11	0.5	0.5	3.3	3.2	0.9	0.8
	60"	11	7	0.5	0.5	4.2	3.4	0.5	0.6
1,001 to 2,000 sf	36"	66	43	0.5	0.5	2.2	2.3	0.9	1.4
	48"	34	23	0.5	0.5	3.2	3.3	0.9	1.2
	60"	22	14	0.5	0.5	4.3	3.6	0.9	0.9
2,001 to 3,000 sf	36"	90	66	0.5	0.5	2.2	2.4	0.9	1.9
	48"	48	36	0.5	0.5	3.1	2.8	0.9	1.5
	60"	30	20	0.5	0.5	4.2	3.7	0.9	1.1
3,001 to 4,000 sf	36"	120	78	0.5	0.5	2.4	2.2	1.4	1.6
	48"	62	42	0.5	0.5	2.8	2.9	0.8	1.3
	60"	42	26	0.5	0.5	3.8	3.9	0.9	1.3
4,001 to 5,000 sf	36"	134	91	0.5	0.5	2.8	2.2	1.7	1.5
	48"	73	49	0.5	0.5	3.6	2.9	1.6	1.5
	60"	46	31	0.5	0.5	4.6	3.5	1.6	1.3
5,001 to 6,000 sf	36"	162	109	0.5	0.5	2.7	2.2	1.8	1.6
	48"	90	59	0.5	0.5	3.5	2.9	1.7	1.5
	60"	54	37	0.5	0.5	4.6	3.6	1.6	1.4
6,001 to 7,000 sf	36"	192	128	0.5	0.5	2.7	2.2	1.9	1.8
	48"	102	68	0.5	0.5	3.7	2.9	1.9	1.6
	60"	64	43	0.5	0.5	4.6	3.6	1.8	1.5
7,001 to 8,000 sf	36"	216	146	0.5	0.5	2.8	2.2	2.0	1.9
	48"	119	79	0.5	0.5	3.8	2.9	2.2	1.7
	60"	73	49	0.5	0.5	4.5	3.6	2.0	1.6
8,001 to 8,500 sf(1)	36"	228	155	0.5	0.5	2.8	2.2	2.1	1.9
	48"	124	84	0.5	0.5	3.7	2.9	1.9	1.8
	60"	77	53	0.5	0.5	4.6	3.6	2.0	1.6
8,501 to 9,000 sf	36"	NA (1)	164	0.5	0.5	NA (1)	2.2	NA (1)	1.9
	48"	NA (1)	89	0.5	0.5	NA (1)	2.9	NA (1)	1.9
	60"	NA (1)	55	0.5	0.5	NA (1)	3.6	NA (1)	1.7
9,001 to 9,500 sf(2)	36"	NA (1)	174	0.5	0.5	NA (1)	2.2	NA (1)	2.1
	48"	NA (1)	94	0.5	0.5	NA (1)	2.9	NA (1)	2.0
	60"	NA (1)	58	0.5	0.5	NA (1)	3.7	NA (1)	1.7

Notes:

- Minimum Requirement #7 (Flow Control) is required when the 100-year flow frequency causes a 0.15 cubic feet per second increase (when modeled in WWHM with a 15-minute timestep). Breakpoints shown in this table are based on a flat slope (0-5%). The 100-year flow frequency will need to be evaluated on a site-specific basis for projects on moderate (5-15%) or steep (> 15%) slopes.
- Soil type to be determined by geotechnical analysis or soil map.
- Sizing includes a Volume Correction Factor of 120%.
- Upper bound contributing area used for sizing.

(1) On Type B soils, new plus replaced impervious surface areas exceeding 8,500 sf trigger Minimum Requirement #7 (Flow Control)
(2) On Type C soils, new plus replaced impervious surface areas exceeding 9,500 sf trigger Minimum Requirement #7 (Flow Control)
(3) Minimum orifice diameter = 0.5 inches
in = inch
ft = feet
sf = square feet

Basis of Sizing Assumptions:
Sized per MR#5 in the Stormwater Management Manual for Puget Sound Basin (1992 Ecology Manual)
SBUH, Type 1A, 24-hour hydrograph
2-year, 24-hour storm = 2 in; 10-year, 24-hour storm = 3 in; 100-year, 24-hour storm = 4 in
Predeveloped = second growth forest (CN = 72 for Type B soils, CN = 81 for Type C soils)
Developed = impervious (CN = 98)
0.5 foot of sediment storage in detention pipe
Overland slope = 5%

DETENTION PROFILE

SCALE: HORIZONTAL 1"=10', VERTICAL 1"=5'

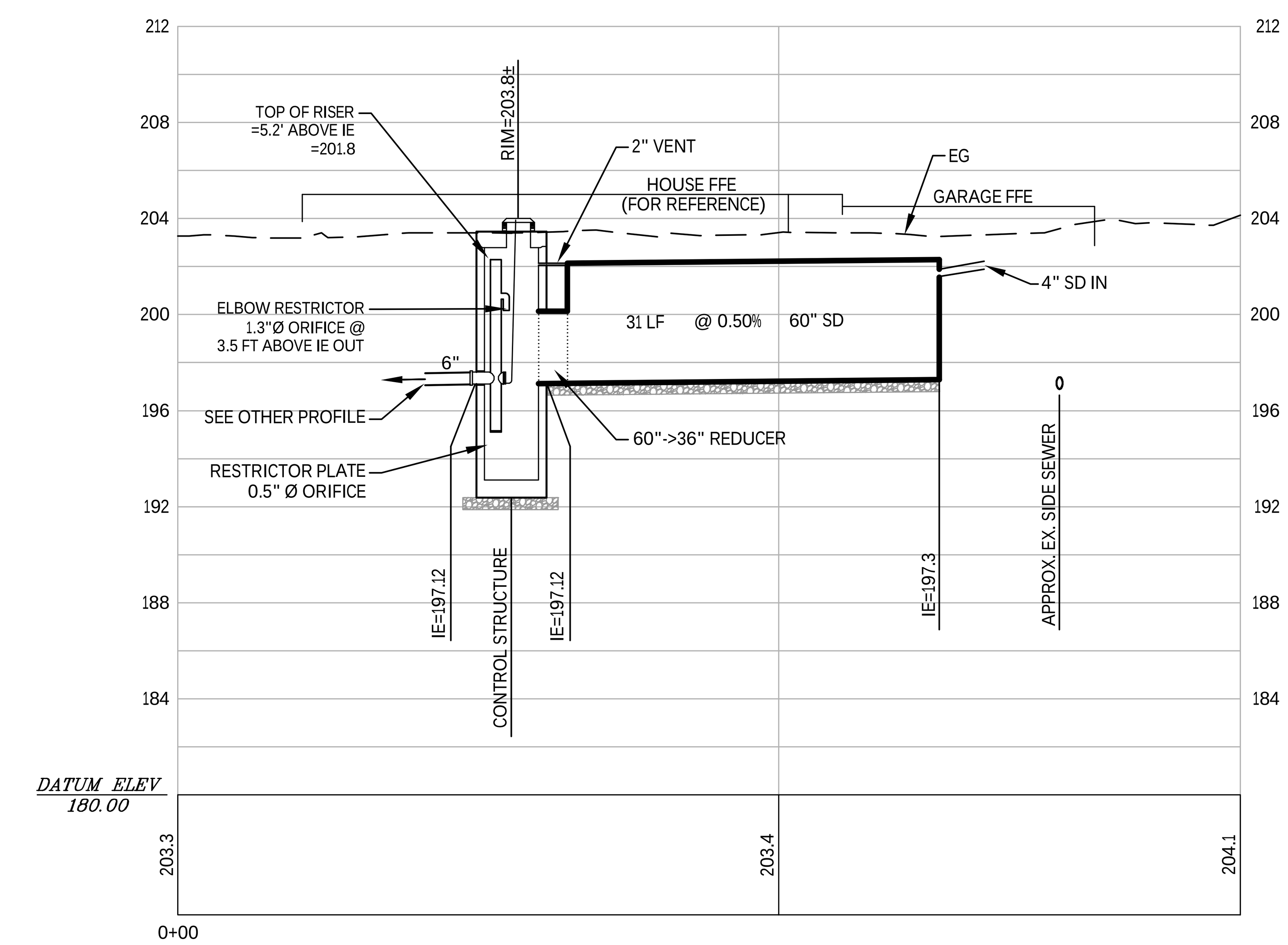

GEOLOGY MAP

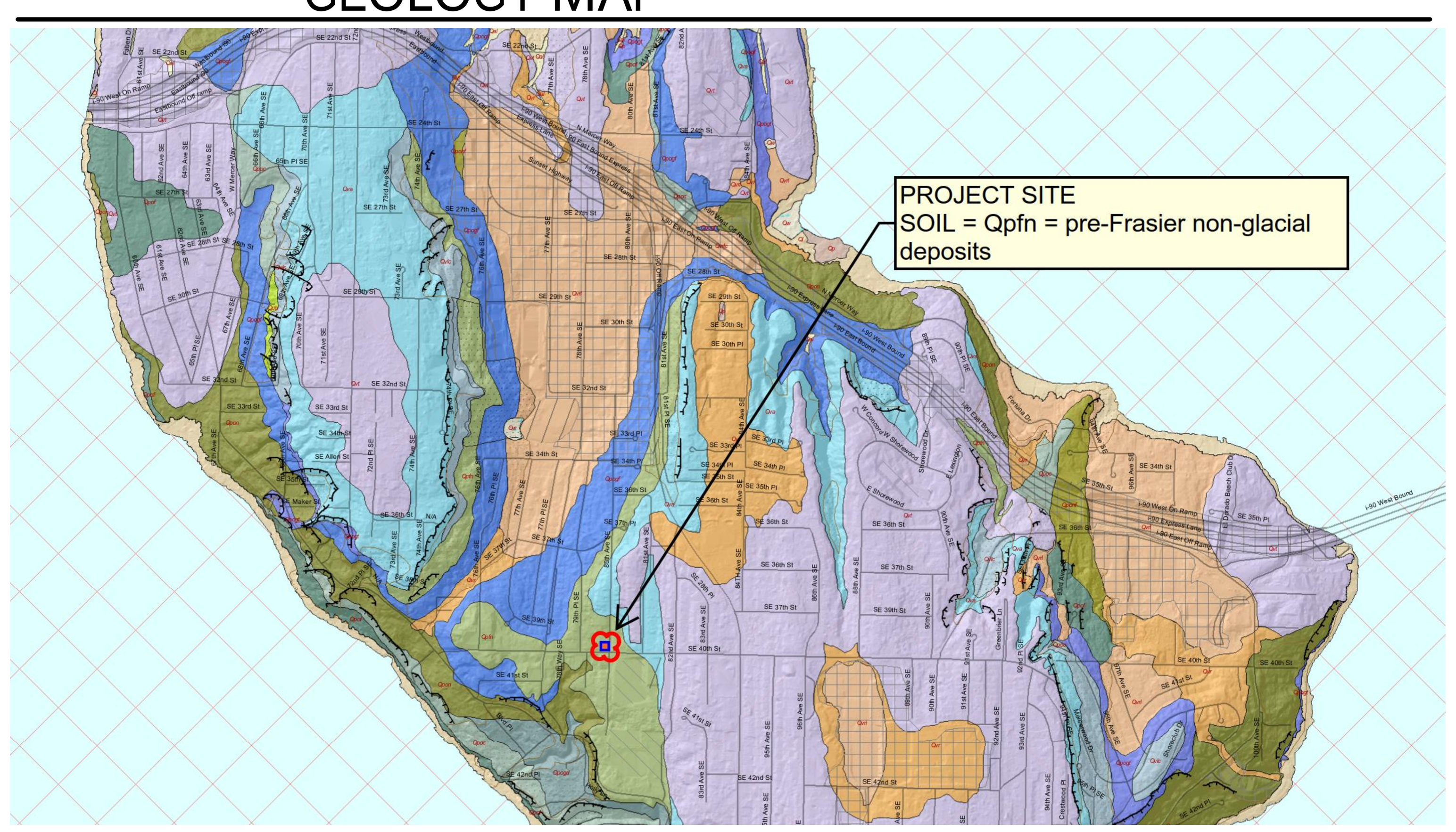

IMPERVIOUS TABLE

Impervious Area Spreadsheet		
Proposed Residence - 3869 80th Ave SE, Mercer Island, WA 98040 - CES #1863		
Gross Site area	10,146	sf
	0.233	acres
Existing Impervious Area to be demolished		
Ex house roof	3,060	sf
Ex Driveway, on-site, exposed	1,296	sf
Ex Hardscape, exposed	533	sf
Ex Shed roof	118	sf
Ex gravel	408	sf
total existing, to be demolished =	5,415	sf
Proposed Impervious Area (on-site) (new + replaced)		
Roof	3,784	sf
Exposed driveway, on-site, exposed	304	sf
Exposed hardscape at entry	52	sf
total on-site (new + replaced) proposed =	4,140	sf

MERCER ISLAND DETENTION DETAIL

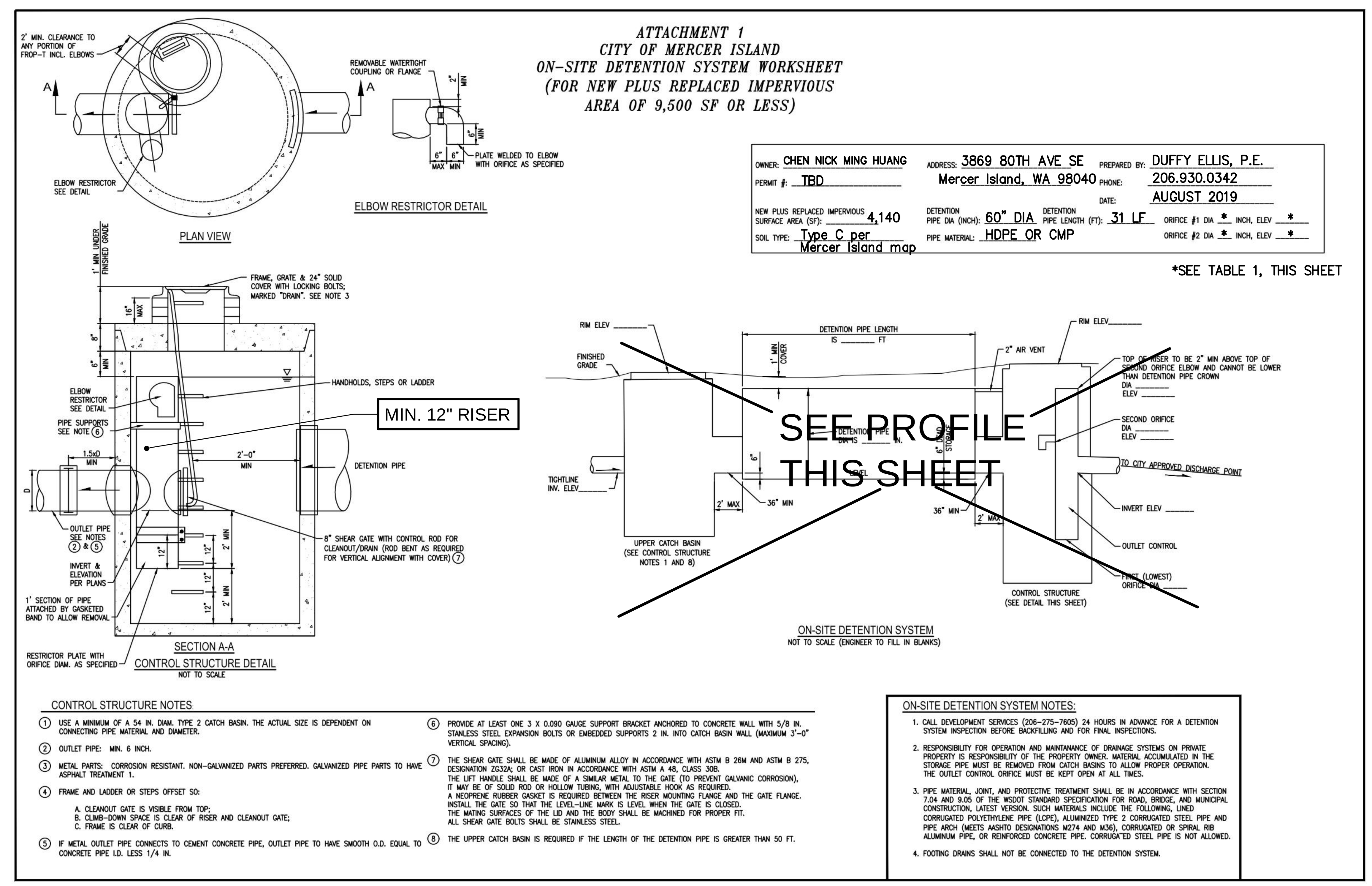

NO.	DATE	BY	REVISIONS

APPLICANT:
CHEN NICK MING HUANG
NICK: 206-769-2078

811 Know what's below. Call before you dig.

DATE: Apr 01, 2020
JOB# 1863
DRAFTED: SS DESIGN: SS
DIGITAL SIGNATURE

Apr 01, 2020

CIVIL ENGINEERING SOLUTIONS
102 NW CANAL STREET SEATTLE, WA 98107
PHONE: 206.930.0342 DUFFY@CESOLUTIONS.US

DETENTION PROFILE AND DETAIL
STORM DRAIN PROFILE
CHEN RESIDENCE
3869 80th AVENUE SE, MERCER ISLAND, WA 98040

DRAWING NO:
C4.0
APN 545900-0255
1911-078

TOPOGRAPHIC & BOUNDARY SURVEY

LEGAL DESCRIPTION

(PER QUIT CLAIM DEED RECORDING# 20160817001318)

LOT 13, BLOCK 11, MECERDALE NO 2, ACCORDING TO THE PLAT THEREOF RECORDED IN VOLUME 60 OF PLATS, PAGE 28, IN KING COUNTY, WASHINGTON.

SITUATED IN THE COUNTY OF KING, STATE OF WASHINGTON

BASIS OF BEARINGS

HELD BEARING OF N 01°12'13" E ALONG MONUMENTED 80TH AVE. S.E. AS SHOWN HEREON AND PER R1.

REFERENCES

R1. PLAT OF MERCERDALE NO. 2, VOL. 60, PG. 27–28. RECORDS OF KING COUNTY, WASHINGTON.

VERTICAL DATUM

NAVD88 PER CITY OF MERCER ISLAND G.I.S. (WGS SURVEY DATA WAREHOUSE).
POINT DESIGNATION 513
CONC MONUMENT IN CASE AT INT 80TH AVE. SE AND SE 40TH ST.
ELEVATION = 205.77'

SURVEYOR'S NOTES

1. THE TOPOGRAPHIC SURVEY SHOWN HEREON WAS PERFORMED IN SEPTEMBER OF 2018. THE FIELD DATA WAS COLLECTED AND RECORDED ON MAGNETIC MEDIA THROUGH AN ELECTRONIC THEODOLITE. THE DATA FILE IS ARCHIVED ON DISC OR CD. WRITTEN FIELD NOTES MAY NOT EXIST. CONTOURS ARE SHOWN FOR CONVENIENCE ONLY. DESIGN SHOULD RELY ON SPOT ELEVATIONS.
2. ALL MONUMENTS SHOWN HEREON WERE LOCATED DURING THE COURSE OF THIS SURVEY UNLESS OTHERWISE NOTED.
3. BURIED UTILITIES SHOWN BASED ON RECORDS FURNISHED BY OTHERS AND VERIFIED WHERE POSSIBLE IN THE FIELD. TERRANE ASSUMES NO LIABILITY FOR THE ACCURACY OF THOSE RECORDS OR ACCEPT RESPONSIBILITY FOR UNDERGROUND LINES WHICH ARE NOT MADE PUBLIC RECORD. FOR THE FINAL LOCATION OF EXISTING UTILITIES IN AREAS CRITICAL TO DESIGN CONTACT THE UTILITY OWNER/AGENCY. AS ALWAYS, CALL 1–800–424–5555 BEFORE CONSTRUCTION.
4. SUBJECT PROPERTY TAX PARCEL NO. 545900–0255
5. SUBJECT PROPERTY AREA PER THIS SURVEY IS 10,146 ±S.F. (0.23 ACRES)
6. THIS SURVEY WAS PERFORMED WITHOUT THE BENEFIT OF A TITLE REPORT. EASEMENTS AND OTHER ENCUMBRANCES MAY EXIST THAT ARE NOT SHOWN HEREON.
7. FIELD DATA FOR THIS SURVEY WAS OBTAINED BY DIRECT FIELD MEASUREMENTS WITH A CALIBRATED ELECTRONIC 5–SECOND TOTAL STATION AND/OR SURVEY GRADE GPS OBSERVATIONS. ALL ANGULAR AND LINEAR RELATIONSHIPS ARE ACCURATE AND MEET THE STANDARDS SET BY WAC 332–130–090.

VICINITY MAP

N.T.S.

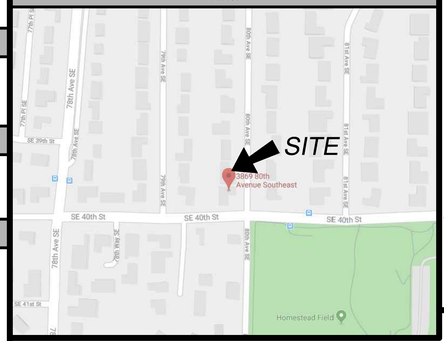

LEGEND

AC UNIT	TELEPHONE MANHOLE
ASPHALT SURFACE	MONUMENT IN CASE (FOUND)
BRICK SURFACE	OHP TRANSMISSION ELEVATION
BUILDING	POWER METER
CENTERLINE ROW	POWER (OVERHEAD)
CONCRETE SURFACE	POWER POLE
RETAINING WALL	POWER POLE W/ LIGHT
DECK	POWER TRANSFORMER ON POLE
FENCE LINE (WOOD)	REBAR/IRON PIPE (FOUND)
FIRE HYDRANT	REBAR & CAP (SET)
GAS LINE	ROCKERY
GAS METER	SEWER LINE
GAS VALVE	SEWER MANHOLE
GRAVEL SURFACE	SIGN (AS NOTED)
HEDGE FOLIAGE LINE	STORM MANHOLE
INLET (TYPE 1)	STORM DRAIN LINE
INLET (SOLID RIM)	TELEPHONE (OVERHEAD)
INLET (FL THRU)	TREE (AS NOTED)
NAIL AS NOTED	WATER LINE
MAILBOX (RESIDENTIAL)	WATER METER
	WATER VALVE

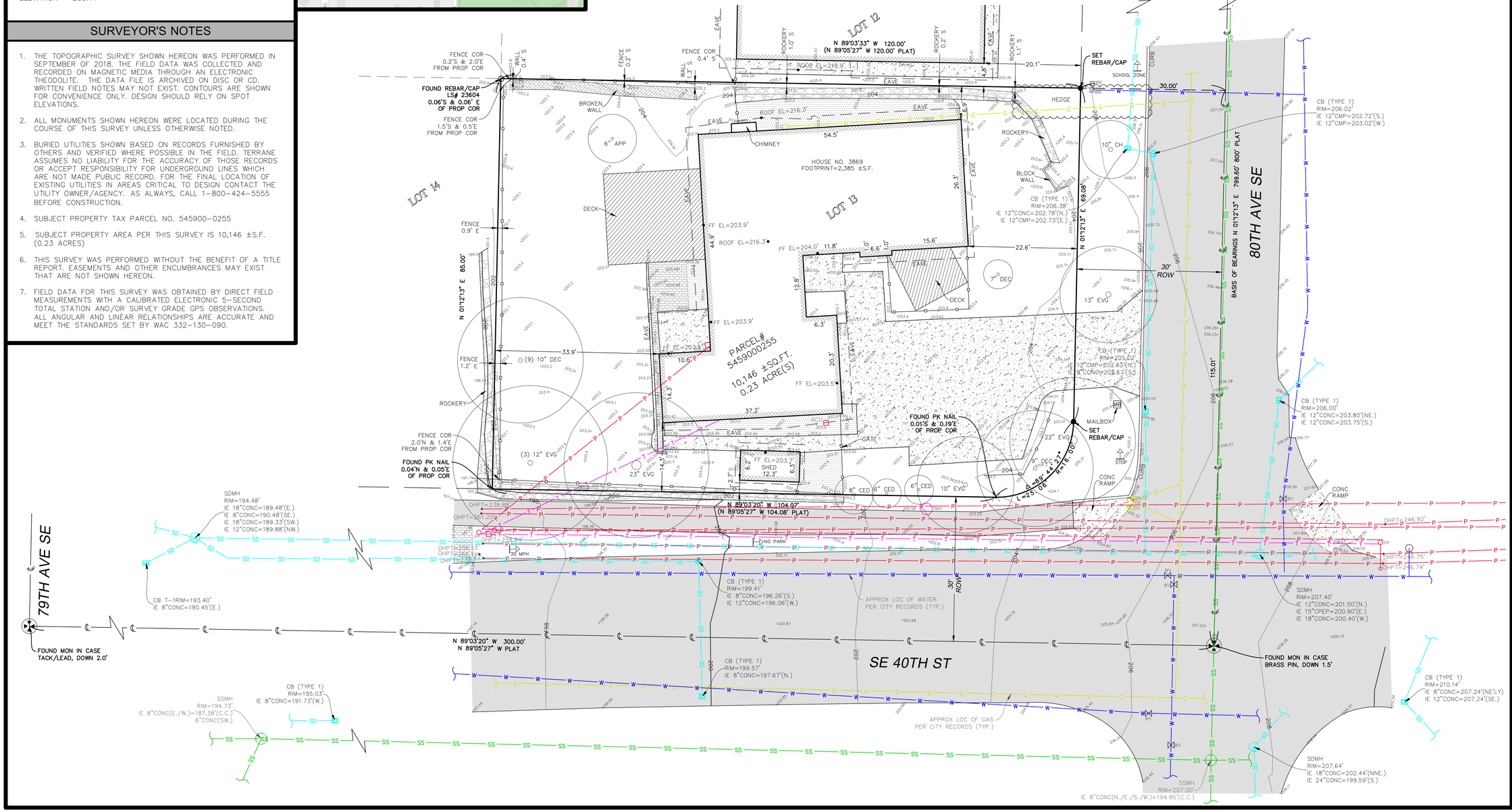

measure success

TOPOGRAPHIC & BOUNDARY SURVEY
SW 1/4 OF SE 1/4 SEC 12, TWP. 24 N., RGE 04 E., W.M.
PARCEL NO. 5459000255

CHEN RESIDENCE
3869 80TH AVE SE
MERCER ISLAND, WA 98040

Terrane
10801 Main Street, Suite 102, Bellevue, WA 98004
phone 425.458.4488 support@terrane.net
www.terrane.net

JOB NUMBER:	181541
DATE:	09/20/18
DRAFTED BY:	IDV-PSC
CHECKED BY:	EJG/TMM
SCALE:	1" = 10'

REVISION HISTORY

SHEET NUMBER
1 OF 1