ABBREVIATIONS

BUILDING CODE, TESTING, DESIGN, & MANUFACTURER ABBREVIATIONS

IRC	INTERNATIONAL RESIDENTIAL CODE
IBC	INTERNATIONAL BUILDING CODE
WSEC	WASHINGTON STATE ENERGY CODE
WSCA	WASHINGTON STATE CODE AMENDMENTS - STATE AMENDMENTS TO A NATIONAL CODE
NFPA	NATIONAL FIRE PROTECTION ASSOCIATION - NATIONAL
OSHA	OCCUPATIONAL SAFETY AND HEALTH ADMINISTRATION - FEDERAL
KCSWDM	KING COUNTY SURFACE WATER DESIGN MANUAL
TESC	TEMPORARY EROSION PROTECTION MEASURES
ASTM	AMERICAN SOCIETY FOR TESTING & MATERIALS CERTIFIED
UL	UNDERWRITER'S LABORATORY TESTED AND CERTIFIED
APA	AMERICAN PLYWOOD ASSOCIATION TESTED AND CERTIFIED
BMP	BEST MANAGEMENT PRACTICES
PER PLAN	REFER TO MERRILL DESIGN PLAN VIEWS
PER STRUCTURAL	REFER TO STRUCTURAL ENGINEER OR ENGINEERING FOR SPECIFICATIONS AND INSTALLATION
PER GEOTECH	REFER TO GEOTECHNICAL ENGINEER OR GEOTECHNICAL REPORT AND RECOMMENDATIONS
MANUF	MANUFACTURERED PRODUCT WHICH HAS BEEN ENGINEERED, WARRANTEED, OR CERTIFIED
SIMPSON	STRUCTURAL HARDWARE & FASTENING MANUFACTURER REFER TO CURRENT SIMPSON CATALOG
HARDIE	JAMES HARDIE COMPANY - MANUFACTURER OF CEMENT BASED EXTERIOR SIDING & TRIM PRODUCTS
TYVEK	A DUPONT COMPANY HOUSE WRAP - MAY SUBSTITUTE EQUIVALENT PRODUCT
WHITE WOOD	PRE-FINISHED TYPE OF EXTERIOR TRIM MATERIAL - DO NOT USE IN THIS PROJECT

GENERAL ABBREVIATIONS

OC	ON CENTER
CL	CENTER LINE
DIA	DIAMETER
HT	HEIGHT
W	WIDTH
L	LENGTH
D	DEPTH
HORIZ	HORIZONTAL
VERT	VERTICAL
MIN	MINIMUM
MAX	MAXIMUM
EQUIV	EQUIVALENT
EX	EXISTING TO REMAIN
EXT	EXTERIOR
INT	INTERIOR
GRADE	GRADE IS THE FINISHED HEIGHT OF THE EARTH SURROUNDING THE BUILDING
EAVE	THE FLAT EDGE OF A ROOF OVERHANG
GABLE	THE SLOPED EDGE OF A ROOF OVERHANG

MEASUREMENT ABBREVIATIONS

"	IINCHES
'	FEET
SF	SQUARE FEET
SQ FT	SQUARE FEET
CU FT	CUBIC FEET
LF	LINEAL FEET
LIN FT	LINEAL FEET
PSI	POUNDS PER SQUARE INCH
PSF	POUNDS PER SQUARE FOOT
GA	GAUGE OR THICKNESS OF METAL PLATE OR SHEET
MIL	MILLIMETER THICKNESS OF PLASTIC SHEET OR MEMBRANE
MEAS	MEASURE - FIELD VERIFY MEASUREMENTS PRIOR TO ORDERING MATERIALS AND FRAMING OPENINGS & OTHER CONSTRUCTION WORK
PITCH	SLOPE OF ROOF 4/12 PITCH = 4" OF RISE IN 12" OF HORIZONTAL LENGTH
R-30	R VALUE IS A MEASURE OF INSULATION, HIGHER R VALUE = MORE INSULATION
U .30	U VALUE IS A MEASURE OF GLAZING ENERGY EFFICENCY - THE LOWER THE U VALUE THE MORE ENERGY EFFICIENT THE GLAZING ASSEMBLY
NFVA	NET FREE VENTILATION AREA

MATERIAL/FIXTURE ABBREVIATIONS

HF	HEM-FIR
OSB	ORIENTED STRAND BOARD SHEATHING & SUB-FLOOR
TJI	ENGINEERED AND PRE- MANUFACTURED I-JOIST OR I- RAFTER
TRUSS	T ENGINEERED AND PRE-MANUFACTURED ROOF OR FLOOR TRUSS
GL BM	GLUE LAMINATED BEAM
GLU-LAM	GLUE LAMINATED BEAM
PSL	PARALAM BEAM - STRUCTURAL BEAM OF LAMINATED FIBERS
LSL	LAMINATED STRAND LUMBER - USED FOR STUDS, RIM JOISTS & BLOCKING
LVL	STRUCTURAL RIM JOIST USED IN CONJUNCTION WITH TJI'S
STURDI-TREAD	1" X 11 1/4" BULLNOSED STRAND BOARD STAIR TREAD MATERIAL
PT	PRESSURE TREATED WOOD
TK	TIGHT KNOT
T-1-11	EXTERIOR RATED PLYWOOD WITH ROUGH SAWN FACE - NO GROOVES
VG	VERTICAL GRAIN
GWB	GYPSUM WALL BOARD OR DRYWALL
16D	LENGTH AND DIAMETER OF A NAIL
GALV	GALVANIZED STEEL
WWM	WELDED WIRE MESH
REBAR	STEEL REINFORCING ROD USED IN CONCRETE CONSTRUCTION
#4 REBAR	REFERS TO DIAMETER OF REBAR
AB	ANCHOR BOLT - BOLT EMBEDDED OR POURED INTO CONCRETE
PVC	PVC PLASTIC - TYPICAL IN WHITE DRAINAGE PIPE
ABS	ABS PLASTIC PIPE - BLACK WASTE PIPE USED IN PLUMBING
PEX	PEX PLASTIC FLEXIBLE PIPE - USED AS SUPPLY LINES FOR PLUMBING
SCHED 40	THICKNESS AND PROPERTIES OF A PARTICULAR PLASTIC PIPE
GAS	APPLIANCE USES NATURAL GAS OR PROPANE FOR HEATING
DW	DISHWASHER
DISP	DISPOSER WITH DECK MOUNTED AIR SWITCH
RANGE	SINGLE APPLIANCE WITH STOVE TOP BURNERS AND OVEN BELOW
MIRCO	MICROWAVE OVEN
HW	HOT WATER HEATER
FURN	AIR HEATING AND MOVING FURNACE
BBQ	PROVIDE NATURAL GAS FOR AN OUTDOOR BARBECUE
BIBB	FROST FREE HOSE BIBB LOCATION

GLAZING, WINDOW & DOOR ABBREVIATIONS

EXT	EXTERIOR DOOR W/ ALUM SILL AND CUT-IN VINYL WEATHERSTRIPPING
SL GL	TEMPERED SLIDING GLASS DOOR W/SCREEN
STORE	WOOD OR FIBERGLASS FRAME TEMPERED GLASS DOOR
SC	SOLID CORE FLAT (FLUSH) DOOR
HC	INTERIOR HOLLOW CORE FLUSH DOOR
CSMT	CASEMENT WINDOW W/ SCREEN
DBL CSMT	(2) CASEMENT WINDOWS MULLED TOGETHER W/SCREENS
SL	1/2 SLIDE WINDOW W/SCREEN
AWN	TOP HINGED PUSH OUT AWNING WINDOW W/SCREEN
FX	FIXED GLASS - PICTURE WINDOW
TEMP	TEMPERED GLASS PER NOTE 2.41/A0.2
EGRESS	EGRESS WINDOW PER 1/A3.1
MEAS	FIELD VERIFY DIMENSIONS PRIOR TO ORDERING UNIT
EX	EXISTING WINDOW OR DOOR TO REMAIN
U .30	U VALUE IS A MEASURE OF GLAZING ENERGY EFFICENCY - THE LOWER THE U VALUE THE MORE ENERGY EFFICIENT THE GLAZING ASSEMBLY
2/6 6/8	2 FT- 6 INCH (30") WIDE X 6 FT - 8 INCH (80") TALL NOMINAL DOOR OR WINDOW SIZE - CONFIRM ROUGH OPENING WITH WINDOW OR DOOR PROVIDER PRIOR TO FRAMING.
ALUM	THERMALLY BROKEN ALUMINUM FRAME WINDOW OR SKYLIGHT
VINYL	PVC PLASTIC FRAME WINDOW OR SLIDING GLASS DOOR
FBGL	FIBERGLASS FRAME WINDOW OR DOOR
CLAD	WOOD WINDOW OR DOOR WITH EXTERIOR CLADDING OF VINYL, ALUM, FIBERGLASS

VINCINITY MAP

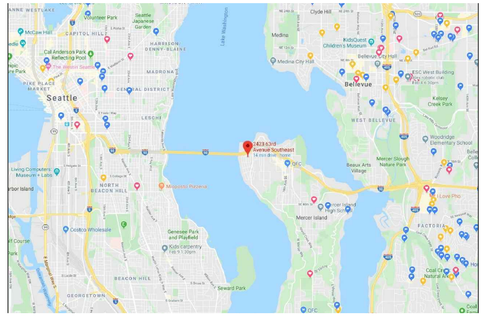

PERSPECTIVE VIEW

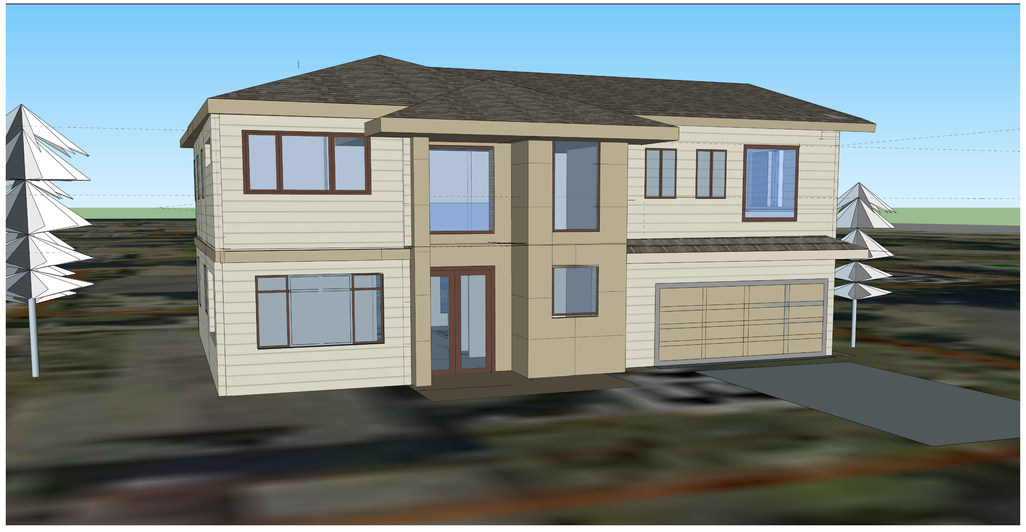

CODE

2015 International Building Code-WAC 51-50
2015 International Residential Code-WAC 51-51
2015 Washington State Energy Code
2015 International Fire Code-WAC 51-54A
2015 International Mechanical Code-WAC 51-52
2015 International Fuel Gas Code-WAC 51-52
2015 Uniform Plumbing Code-WAC 51-56 and WAC 51-57
2015 International Existing Building Code
ANSI 117.1 -2009 (Accessibility Standards)

Current Municipal Code

ZONING

CITY OF MERCER ISLAND, WASHINGTON
ZONING R-8.4

PROPERTY OWNER's AGENT

LI MINGQIN & SUN YONG
2423 63RD AVE SE,MERCER ISLAND, WA 98040
PHONE: 425.628.5628

PROJECT DATA

PROJECT ADDRESS: 2423 63RD AVE SE, MERCER ISLAND, WA 98040
PARCEL NUMBER: 409950-0430
PARCEL SIZE (SQ FT): 10,500 SF

LEGAL DISCRIPTION

LAKE VIEW PLACE EAST SEATTLE N ½ OF 14 ALL OF LOTS 15 THRU 17
PLat Block: 4
Plat Lot: 14-17

SCOPE OF WORK

Demo existing building, build a new building with 2 story house with total building area of around 4,200 sq ft w/ 2 car garage.

PROJECT TEAM

ARCHITECT:
ATLAS ASSOCIATS INTERNATIONAL
GENG TAN, RA, LEED AP
206.488.3688
EMAIL: GENGTAN@GMAIL.COM

SURVEY:
Site Surveying Inc.
Thomas N. Woldendorp
TNW@sitesurveymapping.com
425.298.4412

CIVIL:
Anstey Engineering
Ben Anstey
206.303.7639
benanstey@ansteyengineering.com

STRUCTURE:
GL Architectural Engineering
Nick Lu
360.747.7509
AKEGL2002@gmail.com

SHEET INDEX

A0.1 Cover Sheet
A0.2 General Notes

1.1 Boundary and Topographic Survey

SITE & DRAINAGE PLAN
TESC PLAN

A1.0 Site Plan & Project Data
A2.0 Basement Floor Plan
A2.1 Main Floor Plan
A2.2 Second Floor Plan
A2.4 Roof Plan
A2.5 Door & Window Schedules and Notes
A3.1 Exterior Elevations
A3.2 Exterior Elevations
A4.1 Building Sections & Details
A4.5 Details
A4.6 Details
A4.9 Stairway & Guard Rail Details
A6.1 Mech/Ventilation/Energy

G1.0 General Structural Notes
G1.1 General Structural Notes
S1.0 Foundation Plan
S1.1 Foundation Framing DTLS
S2.0 2nd Floor Framing Plans
S2.1 Floor Framing DTLS
S3.0 Roof Framing Plans
S3.1 Roof and Floor Framing DTLS

atlas architects
Atlas Associates International
5280 Highland Dr.
Bellevue, washington
98006
206.488.3688 v
gengtan@gmail.com
www.Atlascreate.com

Mercer New House

2423 63rd Ave SE
Mercer Island, WA 98040

project no: 53-19

8485 REGISTERED ARCHITECT GENG TAN STATE OF WASHINGTON

Issue/Revision:

NO.	ISSUED FOR	DATE

© 2015 ATLAS ARCHITECTS COMPANY
THESE DRAWINGS ARE THE PROPERTY OF ATLAS ARCHITECTS COMPANY AND ARE NOT TO BE REPRODUCED IN ANY MANNER, EXCEPT WITH THE PRIOR WRITTEN PERMISSION OF ATLAS.

Drawn By	Checked By	Date
TG/UW	TG	8/2017

Sheet Title
PROJECT DATA

Scale NTS

Sheet Number
A0.1

GENERAL NOTES

1

1.01 ALL WORK SHALL BE DONE IN ACCORDANCE WITH THE 2015 INTERNATIONAL BUILDING CODE (IBC), 2015 INTERNATIONAL RESIDENTIAL CODE(IRC)., AND THE CURRENT ELECTRICAL AND MECHANICAL CODES ADOPTED BY THIS JURISDICTION. PER SMC 16.20.050 SCOPE: THE PROVISIONS OF THE INTERNATIONAL RESIDENTIAL CODE FOR ONE AND TWO-FAMILY DWELLINGS SHALL APPLY TO THE CONSTRUCTION... OF DETACHED ONE AND TWO FAMILY DWELLINGS, ...NOT MORE THAN THREE STORIES IN HEIGHT ABOVE GRADE PLANE WITH SEPERATE MEANS OF EGRESS AND THEIR ACCESSORY STRUCTURE THAT ARE NOT MORE THAN THREE STORIES IN EHIGHT ABOVE GRADE PLANE.

1.03 A COPY OF THE 2015 IRC IS REQUIRED TO BE USED IN CONJUNCTION WITH THESE PLANS BY THE GENERAL CONTRACTOR OR OWNER-BUILDER. THE 2015 IRC SHALL BE USED TO INTERPRET THE PLANS AND TO DIRECT, AND CHECK THE WORK. (2015 IRC AVAILABLE FROM BOOK SELLER.)

1.11 THE CONTRACTOR SHALL INFORM THE LOCAL BUILDING DEPARTMENT AND INSPECTION AGENCIES WHEN INSPECTIONS OR TESTS ARE REQUIRED TO CONFORM WITH BUILDING CODE REQUIREMENTS.

1.12 IT SHALL BE THE RESPONSIBILITY OF THE CONTRACTOR AND EACH SUBCONTRACTOR TO REVIEW, UNDERSTAND, AND COORDINATE THEIR WORK WITH APPLICABLE CODE, ORDINANCES, REGULATIONS, AND THESE DRAWING PRIOR TO INSTALLATION OF THEIR WORK. ANY DISCREPANCY BETWEEN THE DRAWINGS AND CODES, ORDINANCES, AND REGULATION SHALL BE BROUGHT TO ATLAS ASSOCIATES FOR CLARIFICATION PRIOR TO PROCEEDING WITH THE WORK.

1.13 THE CONTRACTOR IS RESPONSIBLE FOR OBTAINING AND FOLLOWING THE MANUFACTURER'S INSTALLATION INSTRUCTIONS FOR HANDLING AND INSTALLATION OF ALL PRODUCTS USED IN THIS PROJECT. IF A DISCREPANCY ARISES BETWEEN THE INFORMATION ON THIS PLAN AND THE MANUFACTURER'S INSTALLATION INSTRUCTIONS, CONTACT ATLAS ASSOCIATES.

1.14 THE CONTRACTOR SHALL USE THE SIMPSON C-2016 CATALOG IN CONJUNCTION WITH THESE PLANS TO MAKE CERTAIN THE INSTALLATION AND FASTENINGS FOR ALL SPECIFIED SIMPSON HARDWARE ARE PER THE MANUFACTURER'S SPECIFICATIONS. SIMPSON 800-999-5099

1.15. WORKER SAFETY ON THIS PROJECT DURING CONSTRUCTION SHALL BE THE RESPONSIBILITY OF THE CONTRACTOR. FURTHER, THE CONTRACTOR SHALL BE SOLELY RESPONSIBLE FOR THE DESIGN, ENGINEERING, AND IMPLEMENTATION OF: SHORING TO PROTECT WORKERS FROM CAVE IN; TEMPORARY STRUCTURAL SHORING AND BRACING TO HOLD MEMBERS UP, DOWN OR INTO PLACE; SAFETY MEASURES FOR USE OF EQUIPMENT; FALL PROTECTION MEASURES INCLUDING USE OF PRESCRIBED GUARD RAILS, ANCHORS, AND SCAFFOLDING; AND ALL OTHER SAFETY PRECAUTIONS AS PRESCRIBED BY THE LAWS OF WASHINGTON STATE AND BY THE FEDERAL OCCUPATIONAL SAFETY AND HEALTH ADMINISTRATION (OSHA).

1.16. THE CONTRACTOR SHALL OBTAIN, READ, AND KEEP ON THE JOBSITE MATERIAL SAFETY DATA SHEETS (MSDS) AS IS REQUIRED BY OSHA REGULATION. LIKEWISE THE CONTRACTOR SHALL BE SOLELY RESPONSIBLE FOR ALL REQUIRED SAFETY MEASURES TO KEEP THE WORKERS SAFE WHILE HANDLING OR STORING THESE MATERIALS DURING CONSTRUCTION.

1.17. THE CONTRACTOR IS RESPONSIBLE TO MAKE CERTAIN THAT ALL WORKERS ON THIS PROJECT ARE COVERED AT ALL TIMES BY THE WASHINGTON STATE INDUSTRIAL INSURANCE PROGRAM OR ARE PRINCIPALS IN A WASHINGTON STATE REGISTERED AND BONDED CONTRACTING COMPANY. CONTACT THE WASHINGTON STATE DEPARTMENT OF LABOR AND INDUSTRIES FOR INFORMATION ON ALL SAFETY RULES THAT MUST BE FOLLOWED DURING CONSTRUCTION OF THIS PROJECT AT (425) 990-1402.

1.18 THE CONTRACTOR IS RESPONSIBLE FOR THE DESIGN, INSTALLATION, AND MAINTENANCE OF ALL TEMPORARY MEASURES REQUIRED TO SECURE, WEATHER PROOF AND DUST PROOF THE WORK AND ANY EXISTING STRUCTURE(S) WHICH ARE EFFECTED BY THE WORK.

1.19. IN THE EVENT THE PROPERTY OWNER OR ANY AGENT OF THE PROPERTY OWNER ASSUMES ANY RESPONSIBILITIES NORMALLY UNDERTAKEN BY A CONTRACTOR IN THE COURSE OF CONSTRUCTION OF THIS PROJECT, THE PROPERTY OWNER OR HIS AGENT SHALL FOLLOW ALL RULES, REGULATIONS, AND PRACTICES AS WOULD BE REQUIRED OF A LICENSED GENERAL CONTRACTOR, INCLUDING HIRING ONLY LICENSED AND BONDED SUB-CONTRACTOR.

1.22. IT IS THE RESPONSIBILITY OF THE PROPERTY OWNER TO PROVIDE A GEOTECHNICAL REPORT FOR THIS PROPERTY SHOULD ONE BE REQUIRED. IN LIEU OF A GEOTECHNICAL REPORT ATLAS ASSOCAITES HAS MADE CERTAIN ASSUMPTIONS ABOUT SOILS CONDITIONS THAT HAVE AFFECTED THE DESIGN AND ENGINEERING OF THIS PROJECT. ATLAS ASSOCIATES IS NOT RESPONSIBLE FOR SUB-SURFACE SOIL CONDITIONS NOR FOR ANY COSTS ASSOCIATED WITH UNANTICIPATED SOILS CONDITIONS. SHOULD ADVERSE SOILS CONDITIONS BE ENCOUNTERED THE CONTRACTOR OR PROPERTY OWNER SHALL CONTACT A GEOTECHNICAL ENGINEER AND ATLAS ASSOCIATES IMMEDIATELY. WORK SHALL NOT PROCEED WITHOUT A WRITTEN GEOTECHNICAL EVALUATION, OR A WRITTEN AUTHORIZATION FROM ATLAS ASSOCIATES OR AN APPROVAL BY A BUILDING OFFICIAL TO RESTART THE WORK.

ADDITIONAL ENGINEERING AND DRAFTING PERFORMED BY STRUCTURE ENGINEER WHICH IS REQUIRED FOR FOUNDATION RE-DESIGN AS A RESULT OF SUB-SURFACE CONDITIONS WILL BE AT ADDITIONAL COST TO THE PROPERTY OWNER.

1.24. ATLAS ASSOCIATES IS NOT INFALLIBLE AND HUMAN ERROR MAY OCCUR. ATLAS ASSOCIATES SHALL RE-DRAW THE PLANS AS REQUIRED AT NO COST IF A DESIGN ERROR OR OMISSION OCCURS. THIS SHALL BE THE LIMIT OF THE LIABILITY OF ATLAS ASSOCIATES., OR ANY OF ITS PRINCIPALS OR EMPLOYEES, TO REPAIR DAMAGES CAUSED BY ANY SUCH ERROR OR OMISSION.

2

THESE NOTES MEET OR EXCEED THE 2015 INTERNATIONAL RESIDENTIAL CODE (2015 IRC)

AN AUTOMATIC SPRINKLER SYSTEM CONFORMING TO IRC SECTION P2904 OR NFPA 13D IS REQUIRED. IT SHALL BE BIDDER DESIGNED WITH A DIFFERED PERMIT SUBMITTAL.

SMOKE AND CARBON MONOXIDE ALARMS SHALL BE INSTALLED IN THE FOLLOWING LOCATIONS:

A) IN EACH SLEEPING ROOM.

B) OUTSIDE EACH SEPARATE SLEEPING AREA IN THE IMMEDIATE VICINITY OF THE BEDROOMS.

C) ON EACH ADDITIONAL STORY OF THE DWELLING, INCLUDING BASEMENTS AND HABITABLE ATTICS. BUT NOT INCLUDING CRAWL SPACES AND UNINHABITABLE ATTICS.

IN DWELLINGS OR DWELLING UNITS WITH SPLIT-LEVELS AND WITHOUT AN INTERVENING DOOR BETWEEN THE ADJACENT LEVELS. AN ALARM INSTALLED ON UPPER LEVEL SHALL SUFFICE FOR THE ADJACENT LOWER LEVEL. PROVIDED THAT THE LOWER LEVEL IS LESS THAN ONE FULL STORY BELOW THE UPPER LEVEL.

D) THE ALARM DEVICES SHALL BE INTERCONNECTED IN SUCH A MANNER THAT THE ACTUATION OF ONE ALARM WILL ACTIVATE ALL OF THE ALARMS IN THE INDIVIDUAL HOME.

E) ALL ALARMS SHALL BE HARD WIRED WITH BATTERY BACK-UP. UNLESS ALARMS ARE INSTALLED IN AREAS REQUIRING DRYWALL REMOVAL AND REPLACEMENT, IN WHICH CASE THEY MAY BE BATTERY ONLY OPERATED.

F) IN LIEU OF SMOKE ALARMS AS DESCRIBED ABOVE , A SMOKE DETECTION SYSTEM MAY BE INSTALLED IN ACCORDANCE WITH NFPA 72 THAT INCLUDES SMOKE DETECTOR AND AUDIBLE ALARMS; TO BE DESIGNED AND PERMITTED AND INSTALLED BY A QUALIFIED ALARM CONTRACTOR.

2.17 SINGLE STATION CARBON MONOXIDE ALARMS, COMPLYING WITH UL 2034 TO BE INSTALLED IN THE IMMEDIATE VICINITY OF BEDROOM DOORS. INCLUDING EXISTING BEDROOM AREAS. EVEN IF THESE WILL BE NO WORK IN OR AROUND THOSE BEDROOM AREAS.

2.21 BEDROOM EGRESS OPENING: EVERY NEW ROOM USED FOR SLEEPING PURPOSE SHALL HAVE AT LEAST ONE WINDOW OR EXTERIOR DOOR FOR EMERGENCY EXIST OR RESCUE. WINDOWS SHALL HAVE A FINISH SILL HEIGHT OF NOT MORE THAN 44 INCHES, A CLEAR OPERABLE AREA OF NOT LESS THAN 5.7 SQFT OF AREA (FIVE SQUARE FEET OF AREA ON GROUND FLOOR). MINIMUM NET CLEAR OPENINGS OF 24 INCHES FOR HEIGHT. AND A MINIMUM 20 INCHES FOR WIDTH.

2.31 FIRE SEPARATION BETWEEN GARAGE AND HOUSE.

A) SEPARATE THE GARAGE FROM THE RESIDENCE, ROOM ABOVE, AND ITS ATTIC AREA WITH 5/8" TYP X GYPSUM WALL BOARD (GWB) APPLIED TO THE GARAGE SIDE-FIRE TAPE.

B) IN LIEU OF DRYWALLING A CEILING UNDER AN ATTIC AREA; RUN THE 5/8" TYPE X GWB TO THE BOTTOM OF THE ROOF SHEATHING-FIRE TAPE.

C) POSTS, BEAMS AND OTHER STRUCTURAL MEMBERS SUPPORTING THE SEPERATION SHALL ALSO BE PROTECTED BY NOT LESS THAN 5/8" GWB-FIRE TAPE.

D) OTHER OPENINGS BETWEEN THE GARAGE AND RESIDENCE SHALL BE EQUIPPED WITH SOLID CORE WOOD DOORS NOT LESS THAN 1 3/8" THICKNESS; SOLID OR HONEYCOMB CORE STEEL DOORS NOT LESS THAN 1 3/8" THICK; OR 20-MINUTE FIRE-RATED DOORS EQUIPPED WITH A SELF-CLOSING DEVICE.(PER R302.5.1). ACCESS DOORS FROM A GARAGE TO A CRAWL SPACE OR ATTIC SHALL BE OVERLAID WITH 5/8"TYPE X GWB.

2.35. FIREBLOCKING TO BE INSTALLED TO CUT OFF ALL CONCEALED DRAFT OPENINGS (BOTH VERTICAL AND HORIZONTAL) TO FORM AN EFFECTIVE FIRE BARRIER BETWEEN STORIES, AND BETWEEN A TOP STORY AND THE ROOF SPACE. FIREBLOCKING TO BE PROVIDED IN THE FOLLOWING LOCATIONS:
- TO ISOLATE CONCEALED SPACES OF STUD WALLS; VERTICALLY AT CEILING AND FLOOR LEVELS
- HORIZONTALLY IN STUD WALLS EXCEEDING 10' IN HEIGHT
- AT SOFFITS AND LOWERED CEILINGS AND FLOORS
- AT OPENINGS AROUND VENTS, PIPES, DUCTS, CABLES AND WIRES AT CEILING AND FLOOR LEVEL, WITH FIBERGLASS INSULATION, STUFFED TIGHT INTO ALL OPENINGS.

2.41. GLAZING SUBJECT TO HUMAN IMPACT TO BE TEMPERED GLASS. TEMPERED GLASS TO BE PERMANENTLY ETCHED BY THE MANUFACTURER (SECTION R308.4). THE FOLLOWING ARE TYPICALLY ENCOUNTERED SITUATIONS WHERE SAFETY GLAZING IS REQUIRED:

A). ALL GLAZING IN DOORS OR GLAZING WITHIN 24" MEASURED HORIZONTALLY FROM EDGE OF AN OPENING DOOR TO BE TEMPERED GLASS. FIXED PANELS IN SLIDING GLASS DOORS OR SIDELIGHTS SHALL BE TEMPERED GLASS, BUT ADJOINING GLAZING FURTHER THAN 24" FROM THE OPENING DOOR SHALL NOT BE REQUIRED TO BE SAFETY GLAZING.

B). ALL GLAZING WITHIN 18" OF FLOOR OR WALKING SURFACE.

C) ALL GLAZING IN STAIRWELL OR LANDING WITHIN 60" (MEASURED VERTICALLY) OF THE WALKING SURFACE TO BE TEMPERED GLASS. IN ADDITION, ALL GLAZING WITHIN 60" (MEASURED HORIZONTALLY) FROM THE NOSE OF THE BOTTOM STAIR TREAD TO BE TEMPERED GLASS; AND ALL GLAZING WITHIN 36"(MEASURED HORIZONTALLY) OF THE NOSE OF TOP TREAD OF ANY RUN OF STAIRS TO BE TEMPERED GLASS; PROVIDED SUCH GLAZING IS WITHIN 60" VERTICALLY OF THE WALKING SURFACE.

D) ALL GLAZING IN SHOWER OR BATH TUB ENCLOSURE, AND IN ALL WINDOWS IN WALLS ENCLOSING SHOWER OR BATH TUBS WHERE BOTTOM EDGE OF THE GLAZING IS WITHIN 60" VERTICALLY OF THE FLOOR OR WALKING SURFACE. ALSO GLAZING WITHIN 60" HORIZONTALLY FROM THE WATER EDGE OF A BATH TUB (AND WITHIN 60" VERTICALLY OF THE WALKING SURFACE) TO BE TEMPERED GLASS.

2.51. HABITABLE ROOMS, HALLWAYS, CORRIDORS, BATHROOMS, TOILET ROOMS, LAUNDRY ROOMS, AND BASEMENTS TO HAVE A CEILING HEIGHT OF NOT LESS THAN SEVEN FEET. THE REQUIRED HEIGHT TO BE MEASURED FROM THE FINISH FLOOR TO THE LOWEST PROJECTION FROM THE CEILING. CONTACT ATLAS ASSOCIATES PRIOR TO COMMENCING WORK IF THERE ARE ANY HEIGHT ISSUES IN HABITABLE ROOMS.

2.61 BATHTUB AND SHOWER FLOORS AND WALLS ABOVE BATHTUBS WITH INSTALLED SHOWERHEADS, AND IN SHOWER COMPARTMENTS, TO BE FINISHED WITH TILE OR OTHER NONABSORBENT SURFACE. ALL SHOWER ENCLOSURES OTHER THAN ACRYLIC UNITS TO RECEIVE 1/2" CONCRETE BOARD TILE BACKING-TAPE JOINS WITH FIBERGLASS TAPE AND THIN SET (THIS INCLUDES TUB DECKS AND SKIRTS) MIN HEIGHT ABOVE SHOWER PAN 80". DO NOT USE DRYWALL OF ANY TYPE BEHIND TILE OR OTHER FINISHES IN A SHOWER OR TUB SURROUND. MUDSET SHOWER PAN TO BE BIDDER DESIGNED AND CONSTRUCTED PER BEST INDUSTRY PRACTICE. SLOPE ALL SURFACE AREA TO DRAIN. TEST SHOWER PANS BY FILLING OVERNIGHT PRIOR TO INSTALLING FINISH SURFACES.

2.71 STAIRWAYS & GUARDRAILS: SEE NOTES SHEET A4.9

3

3.11. SPECIFICATIONS, CONSTRUCTION, FASTENINGS, AND ASSEMBLIES OF ALL STRUCTURAL ELEMENTS SHALL BE CONTROLLED BY DOCUMENTS PROVIDED BY THE STRUCTURAL ENGINEER. ALL DIMENSIONS (OTHER THAN MEMBER SIZES) AND ALL ARCHITECTURAL DETAILS AND FINISHES SHALL BE CONTROLLED BY DOCUMENTS PROVIDED BY ATLAS ASSOCIATES. IF A DISCREPANCY BETWEEN DOCUMENTS PROVIDED BY ATLAS ASSOCIATES AND DOCUMENTS PROVIDED BY THE STRUCTURAL ENGINEER OCCURS, CONTACT ATLAS ASSOCIATES OR THE STRUCTURAL ENGINEER PRIOR TO PROCEEDING WITH THE WORK.

3.12 THE CONTRACTOR SHALL CONSULT ATLAS ASSOCIATES OR STRUCTURAL ENGINEER BEFORE ANY FRAMING MODIFICATIONS; INCLUDING BUT NOT LIMITED TO WALL PENETRATIONS AND CUTTING OR DRILLING OF BEAMS.

3.13 ALL DIMENSIONS ARE TO FACE OF STUD, FACE OF BEAM, FACE OF CONCRETE STEM WALL, OUTSIDE EDGE OF CONCRETE FLATWORK, OUTSIDE OF DECK FRAMING. CENTER OF POSTS AND PIERS.

3.14. DO NOT SCALE THE DRAWINGS. THE CONTRACTOR SHALL USE DIMENSIONS AS SHOWN AND ACTUAL FIELD MEASUREMENTS; NOTIFY ATLAS ASSOCIATES OF ANY DISCREPANCIES.

3.15. THE CONTRACTOR IS ENCOURAGED TO RECYCLE ALL MATERIALS POSSIBLE.

3.21 IF GROUND WATER IS ENCOUNTERED DURING EXCAVATION CONTACT ATLAS ASSOCIATES OR A SOILS ENGINEER PRIOR TO PROCEEDING WITH CONSTRUCTION OF THE FOUNDATION.

3.22 IF, ONCE THE FOUNDATION IS BUILT, GROUND WATER IS OBSERVED INSIDE THE CRAWL SPACE OR BASEMENT, CONTACT ATLAS ASSOCIATES PRIOR TO POURING BASEMENT SLAB OR FRAMING OVER CRAWL SPACE.

3.25. THE HEIGHT OF ALL FOUNDATION WALLS TO BE ESTABLISHED SO THAT A MINIMUM 8" IS LEFT BETWEEN ANY NON-PRESSURE TREATED WOOD OR OTHER MATERIALS SUSCEPTIBLE TO DECAY AND THE FINISH GRADE.

3.31. CONCRETE:

A). UNLESS OTHERWISE SPECIFIED, ALL CONCRETE USED IN THIS PROJECT SHALL HAVE A MINIMUM COMPRESSIVE STRENGTH OF 3000 PSI AT 28 DAYS.

B). CONCRETE FLATWORK EXPOSED TO THE WEATHER SHALL BE AIR ENTRAINED, (BETWEEN 5% AND 7% AIR CONTENT BY VOLUME OF CONCRETE).

C). CONCRETE FOR FOUNDATIONS MUST BE POURED WITH A SLUMP NOT EXCEEDING 6".

D). MECHANICALLY VIBRATE WET CONCRETE IN FORMS TO CONSOLIDATE AROUND EMBEDDED REINFORCING AND INTO CORNERS.

3.35. THE EMBEDDED PORTIONS OF ALL HOLD-DOWNS SHALL BE IN PLACE AT FOUNDATION INSPECTION AND SHALL BE INSTALLED PER THE MANUFACTURER'S SPECIFICATIONS. LOCATION OF HOLD DOWNS MUST BE CAREFULLY DETERMINED AND MUST ALIGN WITH THE CORRESPONDING FRAMING MEMBERS ABOVE. LOCATION AND INSTALLATION PER MANUFACTURER'S SPECIFICATIONS IS THE RESPONSIBILITY OF THE CONTRACTOR.

3.37. FOR BASEMENTS OR ANY AREAS WITH FLOORS BELOW GRADE, DAMPPROOFING THE FOUNDATION WALLS IS NOT ACCEPTABLE BY ITSELF. A WATERPROOF SPRAY APPLIED MATERIAL SHALL BE USED, COVER THE TOP OF ALL FOOTINGS. THEN COVER THE WATERPROOFING WITH A DRAINAGE MATT PRIOR TO BACKFILL. A TRAINED AND MANUFACTURER CERTIFIED SPECIALTY SUB-CONTRACTOR MUST BE USED FOR THIS WORK.

3.41. USE PRESSURE TREATED WOOD IN THE FOLLOWING LOCATIONS:

A). WHEN WOOD JOIST OR STRUCTURAL FLOORS WITHOUT JOISTS ARE LOCATED CLOSER THAN 18 INCHES, OR WOOD GIRDERS ARE LOCATED CLOSER THAN 12 INCHES TO EXPOSED GROUND IN CRAWLSPACES OR UNEXCAVATED AREAS LOCATED WITHIN THE PERIPHERY OF THE BUILDING FOUNDATION.

B). ALL WOOD-FRAMING MEMBERS THAT REST ON CONCRETE OR MASONRY EXTERIOR FOUNDATION WALLS AND ARE LESS THAN EIGHT INCHES FROM EXPOSED GROUND.

C). SILLS AND SLEEPERS ON A CONCRETE OR MASONRY SLAB THAT IS IN DIRECT CONTRACT WITH THE GROUND UNLESS SEPARATED FROM SUCH SLAB BY AN IMPERVIOUS MOISTURE BARRIER.

D). THE ENDS OF WOOD GIRDERS ENTERING EXTERIOR MASONRY OR CONCRETE WALLS HAVING CLEARANCES OF LESS THAN 0.5 INCH ON THE TOP, SIDES, AND ENDS.

E). WOOD SIDING, SHEATHING AND WALL FRAMING ON THE EXTERIOR OF A BUILDING HAVING A CLEARANCE OF LESS THAN EIGHT INCHES FROM THE GROUND.

F). WOOD STRUCTURAL MEMBERS SUPPORTING MOISTUREPERMEABLE FLOORS OR ROOFS THAT ARE EXPOSED TO THE WEATHER, SUCH AS CONCRETE OR MASONRY SLABS, UNLESS SEPARATED FROM SUCH FLOORS OR ROOFS BY AN IMPERVIOUS MOISTURE BARRIER.

G). WOOD FURRING STRIPS OR OTHER WOOD FRAMING MEMBERS ATTACHED DIRECTLY TO THE INTERIOR OF EXTERIOR MASONRY WALLS OR CONCRETE BELOW GRADE EXCEPT WHERE AN APPROVED VAPOR RETARDER IS APPLIED BETWEEN THE WALL AND THE FURRING STRIPS OR FRAMING MEMBERS (SECTION R319).

3.45. ALL JOIST HANGERS AND OTHER FRAMING HARDWARE USED IN CONJUNCTION WITH PRESSURE TREATED LUMBER TO BE SIMPSON ZMAX/ HDG WITH HOT DIPPED GALVANIZED FASTENERS. ADDITIONALLY, FOR HIGH EXPOSURE SITUATIONS OR FOR BURIED HARDWARE USE STAINLESS STEEL HARDWARE & FASTENERS.

3.51. INSTALL GASKET SEALS BETWEEN MUDSILL FOR PONY WALLS IN BASEMENTS OR HEATED AREAS.

4

CRAWL SPACE REQUIREMENTS:

A) USE CAST IN PLACE FOUNDATION VENTS WITH PLASTIC FRAMES AND CORROSION RESISTANT 1/8" WIRE MESH, PLACE PER PLAN.

B) INSTALL MOISTURE BARRIER OF 6 MIL BLACK PLASTIC SHEETING ON THE FLOOR OF CRAWL SPACE. LAP ANY JOINTS 12". LAP TOP OF ALL FOOTINGS.

C) ACCESS REQUIRED TO ALL UNDER-FLOOR SPACES. ACCESS OPENINGS THROUGH FLOOR PER PLAN, MINIMUM 22"X30", OPENINGS IN PERIMETER WALLS PER PLAN, MINIMUM SIZE 18"X30".

STAIR AND GUARD RAIL:

4.9.01 ALL STAIRWELLS TO HAVE MINIMUM 31 1/2" WIDE NET CLEAR WALK SPACE MEASURED FROM THE INSIDE OF ANY HANDRAILS.

4.9.05 ALL GLAZING IN A STAIRWELL OR LANDING WITHIN 60" (MEASURED VERTICALLY) OF THE WALKING SURFACE WILL BE TEMPERED GLASS. IN ADDITION, ALL GLAZING WITHIN 60"(MEASURED HORIZONTALLY) FROM THE NOSE OF THE BOTTOM STAIR TREAD WILL BE TEMPERED GLASS; AND ALL GLAZING WITHIN 36"(MEASURED HORIZONTALLY) OF THE NOSE OF THE TREAD OF ANY RUN OF STAIRS; PROVIDED SUCH GLAZING IS WITHIN 60" VERTICALLY OF THE WALKING SURFACE.

4.9.11 BALCONIES, DECKS, OR RAISED FLOOR SURFACES LOCATED MORE THAN 30" ABOVE THE FLOOR OR GRADE BELOW WILL HAVE GUARD RAILS NOT LESS THAN 36" IN HEIGHT. OPEN SIDES OF STAIRS WITH A TOTAL RISE OF MORE THAN 30" ABOVE FLOOR OF GRADE BELOW WILL ALSO HAVE GUARD RAIL NOT LESS THAN 34" IN HEIGHT MEASURE VERTICALLY FROM THE NOSING OF THE TREADS.

4.9.15 LANDING REQUIREMENTS: THERE SHALL BE FLOOR OR LANDING ON EACH SIDE OF A DOOR, NOT MORE THAN 1.5" LOWER THAN TOP OF THRESHOLD AND HAVING A MINIMUM DEIMENSION OF 36" MEASURE IN DIRECTION OF TRAVEL. EXCEPTIONS: WHEN A STAIRWAY OF TWO OR FEWER RISERS IS LOCATED ON THE EXTERIOR SIDE OF THE DOOR DOES NOT SWING OVER THE LANDING.

4.9.21. WINDING STAIRCASE: WINDING TREAD SHALL HAVE A MINIMUM TREAD DEPTH OF 10" MEASURED AS ABOVE AT A POINT 12" FROM THE SIDE WHERE TREADS ARE NARROWER. WINDER TREADS SHALL HAVE A MINIMUM TREAD DEPTH OF 6" AT ANY POINT. WITHIN ANY FLIGHT OF STAIRS, THE GREATEST WINDER TREAD DEPTH AT THE 12" WALK LINE SHALL NOT EXCEED THE SMALLEST BY MORE THAN 3/8".

4.9.25. ENCLOSED ACCESSIBLE SPACE UNDER STAIRS (CEILING, WALLS, SOFFITS) SHALL BE PROTECTED ON THE ENCLOSED SIDE WITH 1/2" GYPSUM BOARD. FIRE BLOCK ALL WALL AND VERTICAL CAVITIES WHICH SPAN ANY STAIR RISER.

4.21. UNLESS OTHERWISE SPECIFIED, ALL FRAMING LUMBER USED IN THIS PROJECT SHALL BE #2 HEM-FIR OR BETTER.

4.23 UNLESS OTHERWISE SPECIFIED FLOOR SHEATHING SHALL BE 23/32" APA-RATED SHEATHING. MINIMUM PANEL INDEX 32/16, TONGUE AND GROOVE, GLUED AND NAILED. UNLESS OTHERWISE SPECIFIED NAIL FLOOR SHEATHING WITH 10D AT 6" SPACING AT PANEL EDGES AND 8" AT SUPPORTS WHICH ARE NOT AT PANEL EDGES (FILED NAILING). ADHESIVE SHALL CONFORM TO APA AFG-01 AND SHALL BE INSTALLED IN A 3/8"DIAMETER CONTINUOUS BEAD. NAIL-OFF PANELS FULLY BEFORE ADHESIVE SET UP. AREA OF FLOORS WHICH IS SQUEAK AFTER THE BUILDING IS DRIES-IN WILL REQUIRE THE ADDITION OF #8X1 3/4" DECK SCREWS AT 8" O.C. TO ARREST THE FLOOR SQUEAKS. IF FRAMING IS TOO WET FOR ADHESIVE TO BOND, SUBSTITUTE #8X1 3/4"DECK SCREWS FOR NAILS.

BLOCKING, FURRING, SOFFITS, WIRE PLATES, AND DROP CEILINGS:

4.31. THE CONTRACTOR IS RESPONSIBLE FOR DESIGN AND INSTALLATION OF ALL BLOCKING, BACKING, FIRE STOPS, AND FURRING REQUIRED BY THE UNIFORM MECHANICAL CODE; AND BY THE 2015 IBC,IRC; AND BY LOCAL CODES. THIS INCLUDES THE FOLLOWING:
A). FIRE BLOCKING OF FRAMED WALLS AND VERTICAL OPEN SPACES: AT ROOFS, CEILINGS, AND FLOORS; AND AT STAIR STRINGERS, LANDINGS, RIM OF TUB DECKS OR OTHER VOIDS OPEN TO WALL CAVITIES WHICH FIRE WITHIN SUCH A CAVITY COULD ESCAPE INTO ADJOINING CAVITIES.
B). FLAT BLOCK ANY UN-SHEATHED GABLE TRUSSES FOR ROOF FLASHING AS REQUIRED.
C). SOLID BLOCKING FOR ALL STRUCTURAL PANEL EDGES ON WALLS.
D). OTHER STRUCTURAL BLOCKING PER THE STRUCTURAL ENGINEER.
E). ALL BACKING REQUIRED FOR DRYWALL OR OTHER WALL FINISHES.
F). FIRE STOPS AT EACH FLOOR AND CEILING FOR ALL CHIMNEYS AND SHAFTS.
G). FURRING OVER CONCRETE WALLS AND OTHER PROTRUSIONS BEYOND WALLS AND CEILINGS FOR INSULATION AND WALL BOARD PER THE PLANS.
4.35. THE CONTRACTOR IS RESPONSIBLE FOR THE CONSTRUCTION OF ALL SOFFITS REQUIRED TO HIDE MECHANICAL PIPES, DUCTWORK, ETC.. SOFFIT FRAMING SHOULD BE STRAIT, LEVEL, AND PLUMB. DO NOT END SOFFITS LEAVING SHORT GAPS TO WALLS, INSTEAD CONTINUE SOFFIT TO THE WALL. AVOID BUILDING SOFFITS WHERE THE END OF THE SOFFIT WILL PROTRUDE AROUND A CORNER, OR INTO A DOORWAY OR WINDOW. CONTACT ATLAS ASSOCIATES IF A GOOD FINISHED APPEARANCE IS IN DOUBT PRIOR TO INSTALLING DRYWALL.
4.41. INSTALL A SIMPSON HRS416Z STRAP (ONE ON EACH SIDE OF TOP PLATES) ACROSS ANY PIPE CUT OUT TOP PLATES OF A LOAD BEARING OR LATERAL WALL IF THE CUT IS DEEPER THAN 50% OF THE WIDTH OF THE PLATE. USE 10D GALVANIZED TEKO NAILS TO FASTEN PLATES

5

SAFETY GLAZING:

1.41. GLAZING SUBJECT TO HUMAN IMPACT TO BE TEMPERED GLASS. TEMPERED GLASS TO BE PERMANENTLY ETCHED BY THE MANUFACTURER (SECTION R308.4). THE FOLLOWING ARE TYPICALLY ENCOUNTERED SITUATIONS WHERE SAFETY GLAZING IS REQUIRED:

A). ALL GLAZING IN DOORS OR GLAZING WITHIN 24" MEASURED HORIZONTALLY FROM EDGE OF AN OPENING DOOR TO BE TEMPERED GLASS. FIXED PANELS IN SLIDING GLASS DOORS OR SIDELIGHTS SHALL BE TEMPERED GLASS, BUT ADJOINING GLAZING FURTHER THAN 24" FROM THE OPENING DOOR SHALL NOT BE REQUIRED TO BE SAFETY GLAZING.

B). ALL GLAZING WITHIN 18" OF FLOOR OR WALKING SURFACE.

C) ALL GLAZING IN STAIRWELL OR LANDING WITHIN 60" (MEASURED VERTICALLY) OF THE WALKING SURFACE TO BE TEMPERED GLASS. IN ADDITION, ALL GLAZING WITHIN 60" (MEASURED HORIZONTALLY) FROM THE NOSE OF THE BOTTOM STAIR TREAD TO BE TEMPERED GLASS; AND ALL GLAZING WITHIN 36"(MEASURED HORIZONTALLY) OF THE NOSE OF TOP TREAD OF ANY RUN OF STAIRS TO BE TEMPERED GLASS; PROVIDED SUCH GLAZING IS WITHIN 60" VERTICALLY OF THE WALKING SURFACE.

D) ALL GLAZING IN SHOWER OR BATH TUB ENCLOSURE, AND IN ALL WINDOWS IN WALLS ENCLOSING SHOWER OR BATH TUBS WHERE BOTTOM EDGE OF THE GLAZING IS WITHIN 60" VERTICALLY OF THE FLOOR OR WALKING SURFACE. ALSO GLAZING WITHIN 60" HORIZONTALLY FROM THE WATER EDGE OF A BATH TUB (AND WITHIN 60" VERTICALLY OF THE WALKING SURFACE) TO BE TEMPERED GLASS.

WINDOW & DOOR ROUGH IN AND INSTALLATION REQUIREMENTS:

5.01. WINDOWS AND DOORS ARE CALLED OUT AS TO THE NOMINAL SIZE OF EACH UNIT. THE CONTRACTOR SHALL VERIFY ROUGH-IN DIMENSIONS WITH THE WINDOW AND DOOR MANUFACTURER PRIOR TO FRAMING OPENINGS.

5.02.IF THE BOTTOM OF ANY WINDOW IS MORE THAN 6' ABOVE EXTERIOR GRADE(UP TO 36" AWAY FROM THE BUILDING); NO OPENING PORTION OF THAT WINDOW IS ALLOWED WHICH IS NOT AT LEAST 24" ABOVE FIISHED FLOOR HEIGHT.

5.03. ALL WINDOWS AND EXTERIOR DOORS SHALL BE INSTALLED USING BEST PRACTICES AND AS SPECIFIED BY THE MANUFACTURER, INCLUDING WRAPPING ALL FRAMED OPENINGS WITH FLEXIBLE FLASHING, AND SETTING ALL WINDOW FLANGES ON A 3/8" BEAD OF CAULKING. AT TOP OF WINDOWS & EXTERIOR DOORS, INSTALL MIN 24 GA GALVANIZED FLASHING BETWEEN SIDING AND ANY WINDOW CASING. CAULK ALL PRIMED CASINGS AND TRIM TO WINDOW OR DOOR AND TO PRIMED SIDING; PRIOR TO FINISH PAINTING.

5.05. FLASH WITH MIN 24 GA GALV FLASHING BETWEEN SIDING AND ANY HORIZONTAL SURFACE NOT LAPPED BY SIDING INCLUDING RIM JOISTS OF ANY WOOD DECKS.

5.05. AVOID JOINTS IN FLASHINGS. IF A JOINT IS REQUIRED, LAY A 4" LONG PIECE OF THE FLASHING UNDER THE JOINT, AND INSTALL FLASHING OVER THIS BACKING PIECE WITH A BUTT JOINT LAID IN CAULKING.

5.11. ALL EXTERIOR WOOD TRIM SHALL BE CEDAR - DO NOT USE "WHITE WOOD".

5.13. USE OIL BASE PRIMER OR OIL BASED STAIN ON ALL WOOD EXPOSED TO EXTERIOR OF BUILDING PRIOR TO INSTALLATION. PRIME OR STAIN (4) SIDES AND END CUTS.

5.15. FINISH PAINT WITH SPRAY APPLIED PAINT OR STAIN AS SELECTED BY OWNER.

CAPTURED AIRSPACES:

5.21. VENTILATE AT TOP AND BOTTOM ANY VOIDS OR AIRSPACES CAPTURED IN ENCLOSED WOOD FRAMING OR PARAPETS NOT COVERED BY A ROOF. USE PRESSURE TREATED PLYWOOD AND LUMBER TO CONSTRUCT SUCH FRAMING. ANY CAPS TO SUCH FRAMING SHALL BE CONSTRUCTED OF MIN 24 GA. GALVANIZED METAL - NO EXPOSED WOOD CAPS. VENTILATION SHALL BE DESIGNED TO BE PROTECTED FROM THE ELEMENTS. IF NEEDED, CONTACT ATLAS ASSOCIATES PRIOR TO PROCEEDING WITH THE WORK.

MECHANICAL:

5.31. THE CONTRACTOR SHALL VERIFY SIZES AND LOCATIONS OF ALL OPENINGS FOR MECHANICAL EQUIPMENT, ELECTRICAL EQUIPMENT, OWNER SUPPLIED EQUIPMENT, AND OTHER EQUIPMENT.

5.33. THE CONTRACTOR SHALL VERIFY/ADJUST SIZES AND LOCATIONS OF ALL EQUIPMENT PADS AND BASES, POWER, WATER AND DRAIN INSTALLATIONS BEFORE PROCEEDING WITH THE WORK.

5.35. ALL PIPING IN CEILING AND EXTERIOR WALLS SHALL BE ON THE WARM SIDE OF THERMAL INSULATION.

SPRAY FORM INSULTATION:

5.41. ALL SPRAY FOAM INSULATION SHALL HAVE A FLAME-SPREAD INDEX NOT TO EXCEED 25 WITH AN ACCOMPANYING SMOKE-DEVELOPED INDEX NOT TO EXCEED 450 (ASTM E 84 TESTING)

WALL FINISH:

5.51. ALL GYPSUM WALL BOARD (GWB) INSTALLED ON CEILINGS INSIDE THE RESIDENCE SHALL BE 5/8" THICK OR 1/2" THICK CEILING RATED GWB, AND SHALL BE MANUFACTURED IN THE USA.

5.53. THE MINIMUM FINISH FOR ALL GWB INSIDE THE RESIDENCE SHALL BE A LIGHT "ORANGE PEEL" TEXTURE. WALLS SHALL BE PRIMED WITH LOW PERM PVA PRIMER PRIOR TO THE LAST COAT OF DRYWALL COMPOUND. WALLS AND CEILINGS SHOULD BE CHECKED WITH A PORTABLE LIGHT AND TOUCHED UP AS REQUIRED PRIOR TO TEXTURE.

5.55. FINISH PAINT GWB WITH 2 COAT LATEX PAINT, SPRAY AND ROLL BEHIND OR ROLL. PAINT COLOR AND SHEEN AS SPECIFIED BY OWNER.

APPLIANCES AND FIXTURE:

5.65. ALL NEW APPLIANCES AND FIXTURES SHALL BE LABELED BY A NATIONALLY RECOGNIZED TESTING LABORATORY SUCH AS "UL". LABELS SHALL BE AFFIXED TO APPLIANCES AND FIXTURES FOR INSPECTION BY THE BUILDING OFFICIAL.

atlas architects

Atlas Associates International
5280 Highland Dr.
Bellevue, washington
98006
206.488.3688 v
gengtan@gmail.com
www.Atlascreate.com

Mercer New House

2423 63rd Ave SE
Mercer Island, WA 98040

project no: 53-19

8485 REGISTERED ARCHITECT GENG TAN STATE OF WASHINGTON

Issue/Revision:

NO.	ISSUED FOR	DATE

© 2015 ATLAS ARCHITECTS COMPANY
THESE DRAWINGS ARE THE PROPERTY OF ATLAS ARCHITECTS COMPANY AND ARE NOT TO BE REPRODUCED IN ANY MANNER, EXCEPT WITH THE PRIOR WRITTEN PERMISSION OF ATLAS.

Drawn By	Checked By	Date
TG/UW	TG	8/2017

Sheet Title
GENERAL NOTES

Scale

Sheet Number

A 0.2

N
W E
S

GRAPHIC SCALE
5 0 5 10 20
1INCH = 10 FT.

LEGEND

FOUND CONCRETE MONUMENT IN CASE	OHP — OVERHEAD POWER
FOUND REBAR AS DESCRIBED	OHU — OVERHEAD UTILITIES
TACK IN LEAD FOUND	X — CHAINLINK FENCE
SET 5/8" X 24" IRON ROD W/1" YELLOW PLASTIC CAP	WOOD FENCE
POWER METER	CONCRETE WALL
UTILITY POLE	ROCKERY
GAS METER	ASPHALT SURFACE
SANITARY SEWER CLEANOUT	CONCRETE SURFACE
SANITARY SEWER MANHOLE	GRAVEL SURFACE
WATER VALVE	
FIRE HYDRANT	
WATER METER	CE CEDAR
SIGN	DS DECIDUOUS
SS — APPROXIMATE LOCATION SANITARY SEWER LINE	SP SPRUCE
	BI BIRCH
SD — APPROXIMATE LOCATION STORM DRAIN LINE	PI PINE
	* INDICATES MULTI-TRUNK

LEGAL DESCRIPTION

THE NORTH 15 FEET OF LOT 14 AND ALL OF LOTS 15, 16 AND 17, BLOCK 4, LAKE VIEW PLACE EAST SEATTLE, ACCORDING TO THE PLAT THEREOF RECORDED IN VOLUME 8 OF PLATS, PAGE 49, RECORDS OF KING COUNTY, WASHINGTON.

SITUATE IN THE COUNTY OF KING, STATE OF WASHINGTON.

BASIS OF BEARINGS

ACCEPTED A BEARING OF EAST ALONG THE CENTERLINE OF SE 27TH STREET BASED ON FOUND MONUMENTS PER RECORD OF SURVEY RECORDED UNDER KING COUNTY RECORDING NO. 20171009900007

PROJECT INFORMATION

SURVEYOR:	SITE SURVEYING, INC. 21923 NE 11TH ST SAMMAMISH, WA 98074 PHONE: 425.298.4412
PROPERTY OWNER:	MINGQIN LI & YONG SUN 2423 63RD AVENUE SE MERCER ISLAND, WA 98040
TAX PARCEL NUMBER:	409950-0430
PROJECT ADDRESS:	2423 63RD AVENUE SE MERCER ISLAND, WA 98040
ZONING:	SF 5000
JURISDICTION:	CITY OF MERCER ISLAND
PARCEL ACREAGE:	10,500 S.F. (± 0.241 ACRES) AS SURVEYED

GENERAL NOTES

1. THIS SURVEY WAS COMPLETED WITHOUT BENEFIT OF A CURRENT TITLE REPORT. EASEMENTS AND OTHER ENCUMBRANCES MAY EXIST ON THIS PROPERTY THAT ARE NOT SHOWN HEREON.
2. INSTRUMENTATION FOR THIS SURVEY WAS A 3-SECOND NIKON NIVO 5.C TOTAL STATION. PROCEDURES USED IN THIS SURVEY MEET OR EXCEED STANDARDS SET BY WAC 332-130-090.
3. THE INFORMATION ON THIS MAP REPRESENTS THE RESULTS OF A SURVEY MADE IN NOVEMBER 2019 AND CAN ONLY BE CONSIDERED AS INDICATING THE GENERAL CONDITIONS EXISTING AT THAT TIME.
4. UTILITIES SHOWN ON THIS SURVEY ARE BASED UPON ABOVE GROUND OBSERVATIONS AND AS-BUILT PLANS WHERE AVAILABLE. ACTUAL LOCATIONS OF UNDERGROUND UTILITIES MAY VARY AND UTILITIES NOT SHOWN ON THIS SURVEY MAY EXIST ON THIS SITE.
5. ALL MONUMENTS WERE LOCATED DURING THIS SURVEY UNLESS OTHERWISE NOTED.

VERTICAL DATUM & CONTOUR INTERVAL

DATUM

ELEVATIONS SHOWN ON THIS DRAWING WERE DERIVED FROM INFORMATION PROVIDED BY WCCS SURVEY CONTROL DATABASE.

THE MARK IS A MONUMENT IN CASE AT THE INTERSECTION OF SE 27TH STREET & 63RD AVENUE SE.

POINT ID NO. 1097;
ELEVATION: 112.036 FEET (34.149 METERS) NAVD 88

2.0' CONTOUR INTERVAL - THE EXPECTED VERTICAL ACCURACY IS EQUAL TO 1/2 THE CONTOUR INTERVAL OR PLUS / MINUS 1.0' FOR THIS PROJECT.

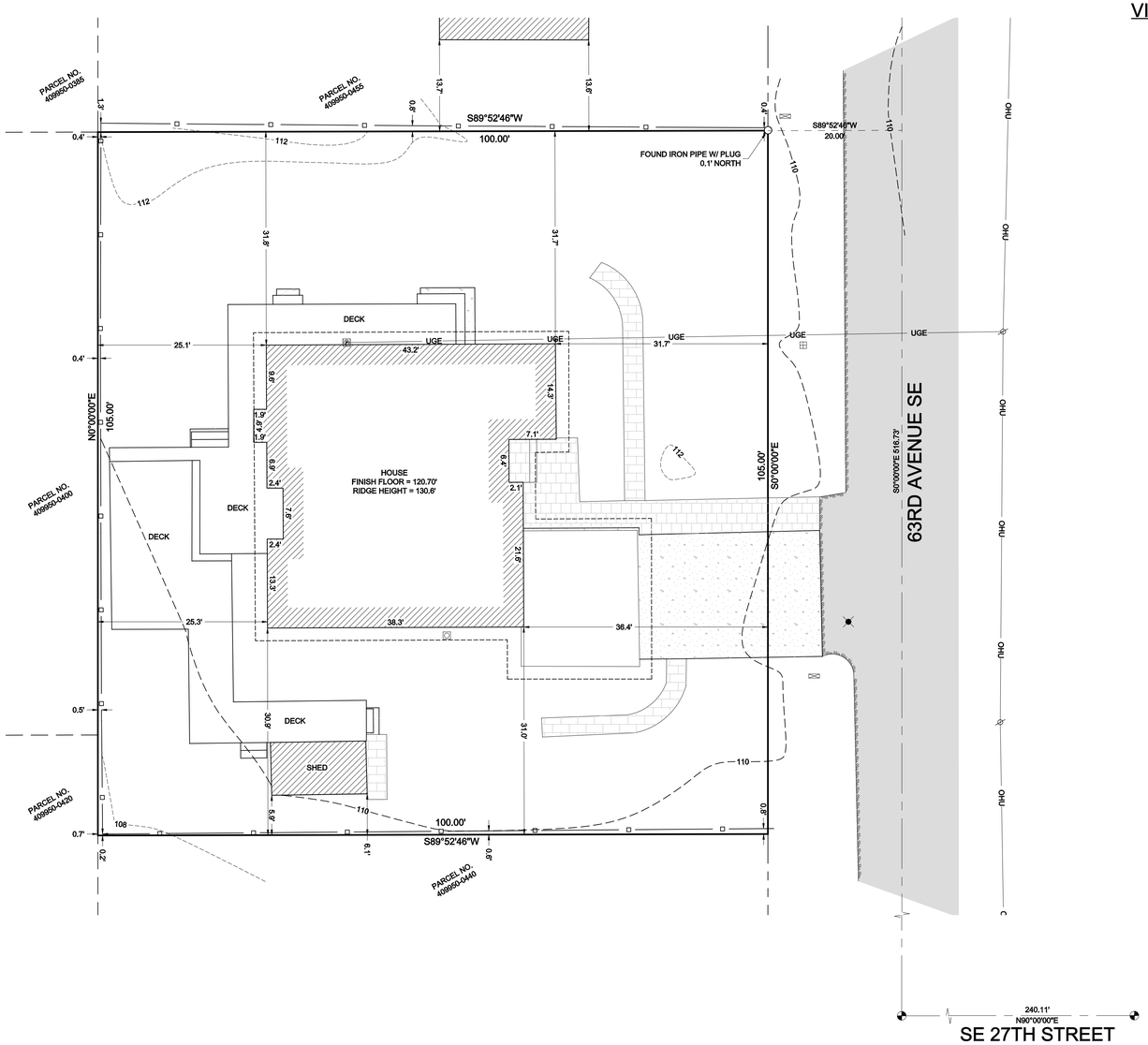

VICINITY MAP
NTS

NE 1/4, NE 1/4, SEC 11, TWP 24N, RNG 4E, W.M.

Site Surveying, Inc.
21923 NE 11th Street Sammamish, WA 98074
Phone: 425.298.4412
www.sitesurveymapping.com

WOLDENDORP ROSANES WASHINGTON GARY L. 35896 STATE OF WASHINGTON N. THOMAS PROFESSIONAL LAND SURVEYOR

DATE	REVISION	DRN

TOPOGRAPHIC SURVEY

MINGQIN LI & YONG SUN
2423 63RD AVENUE SE
MERCER ISLAND, WA 98040

© 2019, SITE SURVEYING, INC., ALL RIGHTS RESERVED

PROJECT NO. 19-484

DRAWN BY: EFJ
CHECKED BY: TNW
DATE: 11/5/19

SHEET 1 OF 1

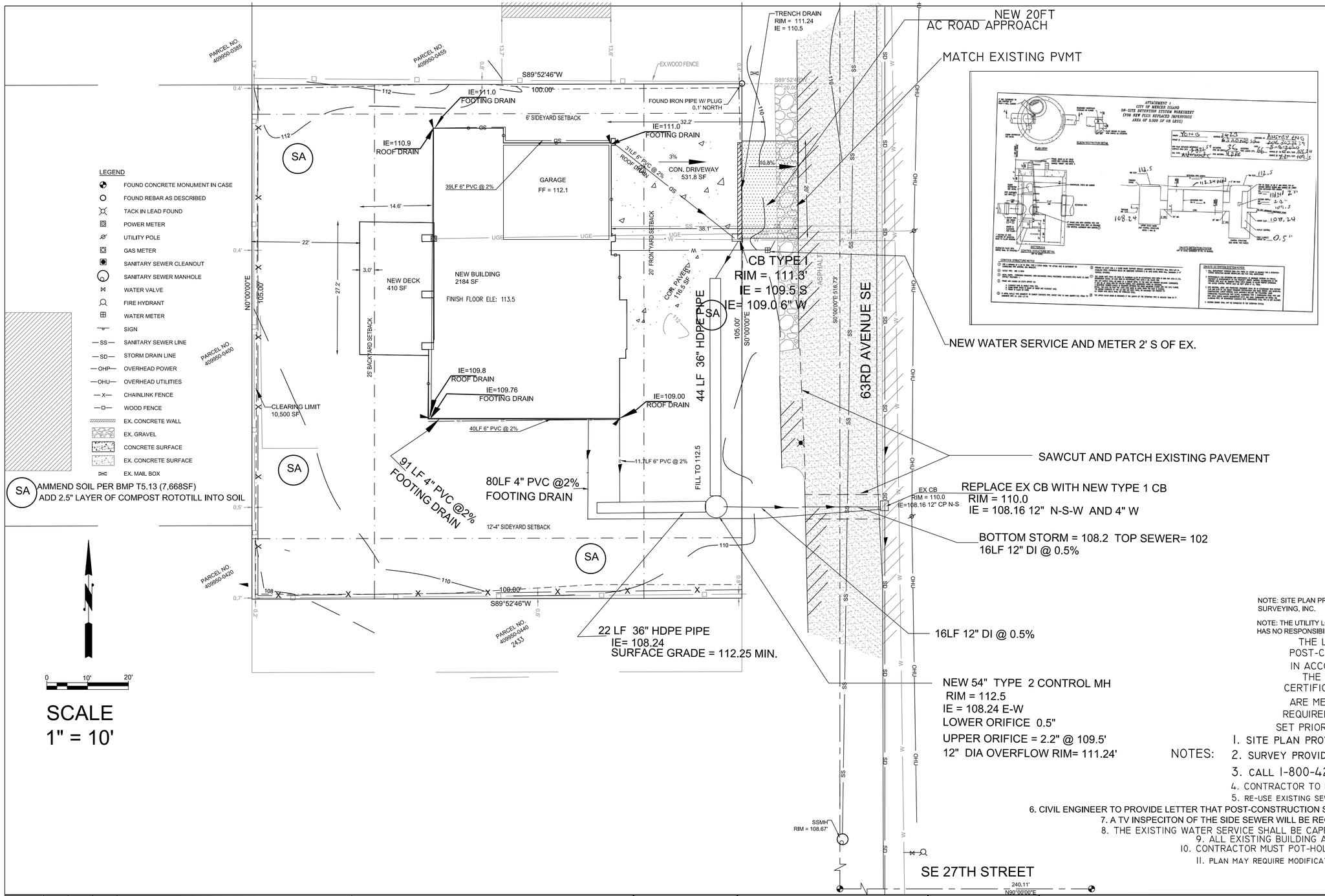

VICINITY MAP

PARCEL # 409950-0430

LEGAL: LAKE VIEW PLACE EAST SEATTLE N 1/2 OF LOT 14 ALL OF LOTS 15 THRU 17
PLat Block: 4
Plat Lot: 14-17

LOPE LESS THAN 15% ALLOWABLE: 40%
LOT SIZE: 10,500 SF
ALLOWABLE IMPERVIOUS AREA: 4,200 SF

1ST LEVEL:	2,120 SF
2ND LEVEL:	2,070 SF
TOTAL	4,190 SF
GROSS FLOOR AREA:	4,190 SF

BASE HEIGHT 30'

TOTAL LOT AREA	10,500 SF
PRO. BUILDING FOOTPRINT INCLUDING GARAGE	2,184 SF
PRO. CONCRETE DRIVEWAY	531.8 SF
PRO. WALKWAY/PAVER	116.5 SF
TOTAL PROPOSED IMPERVIOUS	2,832.3 SF

TOTAL% PROPOSED IMPERVIOUS COVERAGE = 27%

TOTAL NEW AND REPLACED IMPERVIOUS AREAS = 2,944.65 SF OR 28%

TOTAL LOT AREA	10,500 SF
EX. FOOTING BUILDING TBD	1,664 SF
EX. PARKING CARPORT TBD	360 SF
EX. CONCRETE DRIVEWAY TBD	517 SF
EX. CONCRETE TBD	28.33 SF
EX. SHED REMAINED	112.35 SF
TOTAL EX. IMPERVIOUS	2,681.68 SF

TOTAL% EX. IMPERVIOUS COVERAGE = 25.5 %

TOTAL EX. IMPERVIOUS REPLACEMENT = 2,569.33 OR 24.5% COVERAGE

EX. DESKS TBD	1,086.46 SF
EX. BRICKS TBD	407.94 SF
EX. BRICKS REMAINED	105.16 SF

NOTE: SITE PLAN PROVIDED BY ATLAS ARCHITECT AND TOPO PROVIDED BY THOMAS- SITE SURVEYING, INC.

NOTE: THE UTILITY LOCATIONS MUST BE LOCATED BY THE CONTRACTOR BEFORE DIGGING. THE ENGINEER HAS NO RESPONSIBILITY FOR ANY UTILITIES HEREON GRAFTED ON THIS PLAN. CALL 811 BEFORE DIGGING.

THE LAWN AND LANDSCAPE AREAS ARE EXPECTED TO PROVIDE POST-CONSTRUCTION SOIL QUALITY AND DEPTH IN ACCORDANCE WITH BMPT5.13.
THE PROJECT CIVIL ENGINEER MUST PROVIDE A LETTER OF CERTIFICATION TO INSURE THAT THE LAWN AND LANDSCAPE AREAS ARE MEETING THE POST CONSTRUCTION SOIL QUALITY AND DEPTH REQUIREMENTS SPECIFIED ON THE APPROVED PLAN SET PRIOR TO FINAL INSPECTION OF THE PROJECT

NOTES:
1. SITE PLAN PROVIDED BY ATLAS ARCHITECTS
2. SURVEY PROVIDED BY SITE SURVEYING INC.
3. CALL 1-800-424-5555 BEFORE YOU DIG
4. CONTRACTOR TO FIELD VERIFY ELEVATIONS PRIOR TO CONSTRUCTION
5. RE-USE EXISTING SEWER SERVICE
6. CIVIL ENGINEER TO PROVIDE LETTER THAT POST-CONSTRUCTION SOIL QUALITY AND DEPTH REQUIREMENTS ARE MET PER BMP T5.13
7. A TV INSPECITON OF THE SIDE SEWER WILL BE REQUIRED AND MUST BE ACCEPTED BY THE CITY OF MERCER ISLAND
8. THE EXISTING WATER SERVICE SHALL BE CAPPED AND ABANDONED AT THE WATER MAIN IF REPLACED
9. ALL EXISTING BUILDING AND PAVEMENT TO BE REMOVED
10. CONTRACTOR MUST POT-HOLE STREET TO LOCATE UTILITIES PRIOR TO CONSTRUCTION
11. PLAN MAY REQUIRE MODIFICATION AND REVIEW BY CITY AFTER POT-HOLING UTILITIES

NO	DATE	BY	APPR	REVISIONS

ANSTEY ENGINEERING
8627 NE 180th Street
Bothell, WA 98011
Ph: 206-303-7639
Email: benanstey@ansteyengineering.com

5/11/2020

Approved By

BPA 12/17/19	DESIGNED BY DATE
BPA 12/17/19	DRAWN BY DATE
	CHECKED BY DATE

MINGQIN LI & SUN YONG
2423 63RD AVE SE
MERCER ISLAND, WA 98040

SITE & DRAINAGE PLAN

AE2019-84

SHT 1 OF 1

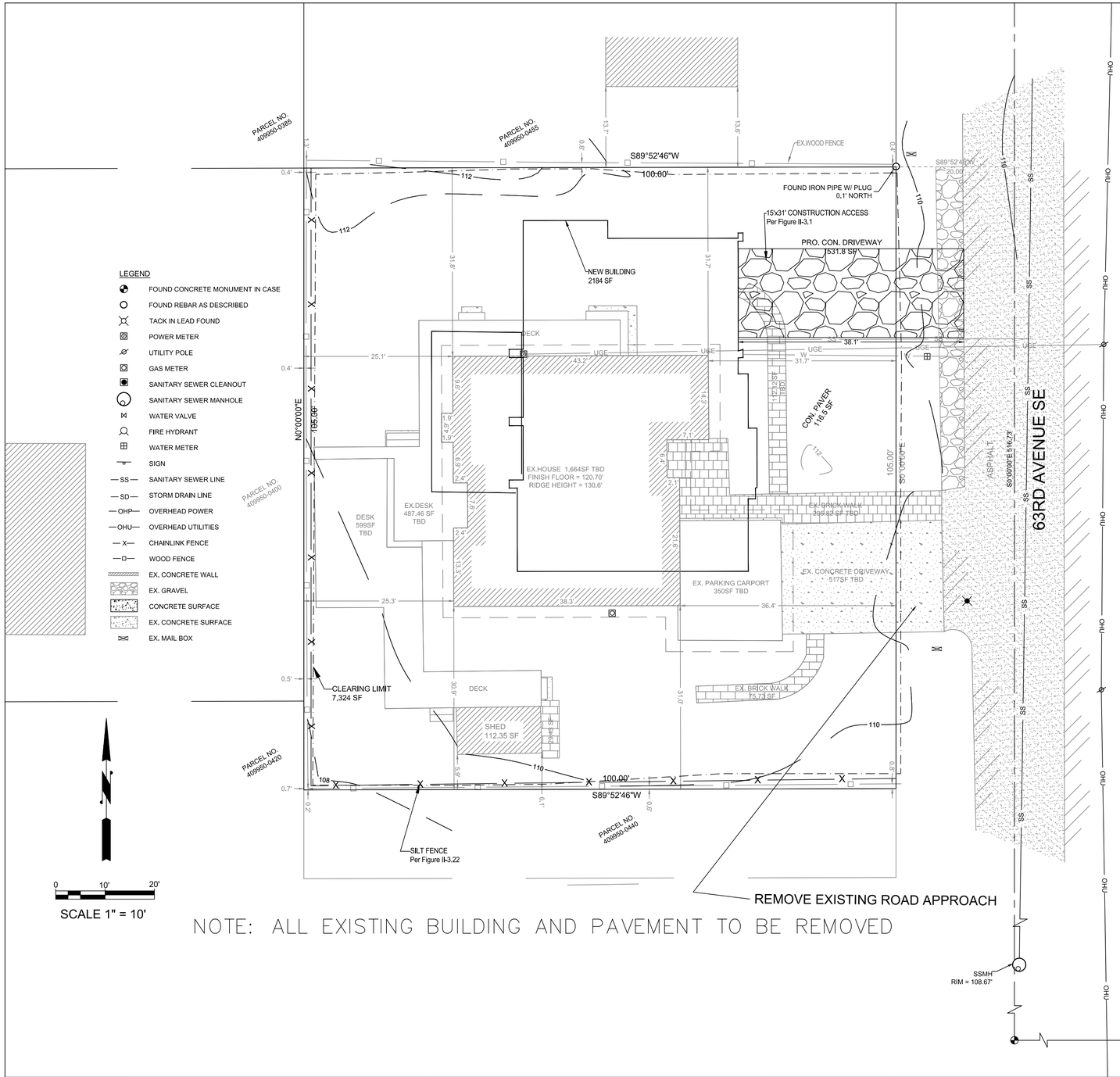

NOTE: ALL EXISTING BUILDING AND PAVEMENT TO BE REMOVED

Figure II-3.1: Stabilized Construction Access

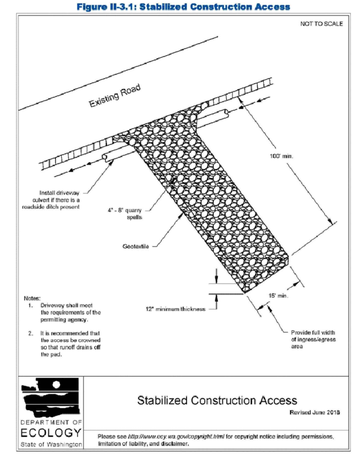

2019 Stormwater Management Manual for Western Washington

Volume II - Chapter 3 - Page 279

Figure II-3.22: Silt Fence

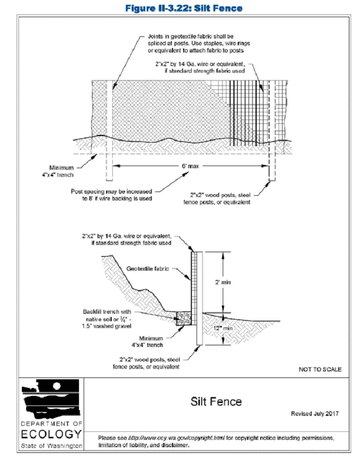

2019 Stormwater Management Manual for Western Washington

Volume II - Chapter 3 - Page 371

VICINITY MAP

PARCEL # 409950-0430

LEGAL: LAKE VIEW PLACE EAST SEATTLE N 1/2 OF LOT 14 ALL OF LOTS 15 THRU 17
PLat Block: 4
Plat Lot: 14-17

LOPE LESS THAN 15% ALLOWABLE: 40%
LOT SIZE: 10,500 SF
ALLOWABLE IMPERVIOUS AREA: 4,200 SF

1ST LEVEL:	2,120 SF
2ND LEVEL:	2,070 SF
TOTAL	4,190 SF
GROSS FLOOR AREA:	4,190 SF

BASE HEIGHT 30'

TOTAL LOT AREA	10,500 SF
PRO. BUILDING FOOTPRINT INCLUDING GARAGE	2,184 SF
PRO. CONCRETE DRIVEWAY	531.8 SF
PRO. WALKWAY/PAVER	116.5 SF
TOTAL PROPOSED IMPERVIOUS	2,832.3 SF

TOTAL% PROPOSED IMPERVIOUS COVERAGE = 27%

TOTAL NEW AND REPLACED IMPERVIOUS AREAS = 2,944.65 SF OR 28%

TOTAL LOT AREA	10,500 SF
EX. FOOTING BUILDING TBD	1,664 SF
EX. PARKING CARPORT TBD	360 SF
EX. CONCRETE DRIVEWAY TBD	517 SF
EX. CONCRETE TBD	28.33 SF
EX. SHED REMAINED	112.35 SF
TOTAL EX. IMPERVIOUS	2,681.68 SF

TOTAL% EX. IMPERVIOUS COVERAGE = 25.5 %

TOTAL EX. IMPERVIOUS REPLACEMENT = 2,569.33 OR 24.5% COVERAGE

EX. DESKS TBD	1,086.46 SF
EX. BRICKS TBD	407.94 SF
EX. BRICKS REMAINED	105.16 SF

NOTE: SITE PLAN PROVIDED BY ATLAS ARCHITECT AND TOPO PROVIDED BY THOMAS- SITE SURVEYING, INC.

NOTE: THE UTILITY LOCATIONS MUST BE LOCATED BY THE CONTRACTOR BEFORE DIGGING. THE ENGINEER HAS NO RESPONSIBILITY FOR ANY UTILITIES HEREON GRAFTED ON THIS PLAN. CALL 811 BEFORE DIGGING.

NO	DATE	BY	APPR	REVISIONS

ANSTEY ENGINEERING
8627 NE 180th Street
Bothell, WA 98011
Ph: 206-303-7639
Email: benanstey@ansteyengineering.com

5/11/2020

Approved By

BPA 12/17/19
DESIGNED BY DATE
BPA 12/17/19
DRAWN BY DATE
CHECKED BY DATE

MINGQIN LI & SUN YONG
2423 63RD AVE SE
MERCER ISLAND, WA 98040

TESC PLAN

AE2019-84

SHT 1 OF 1

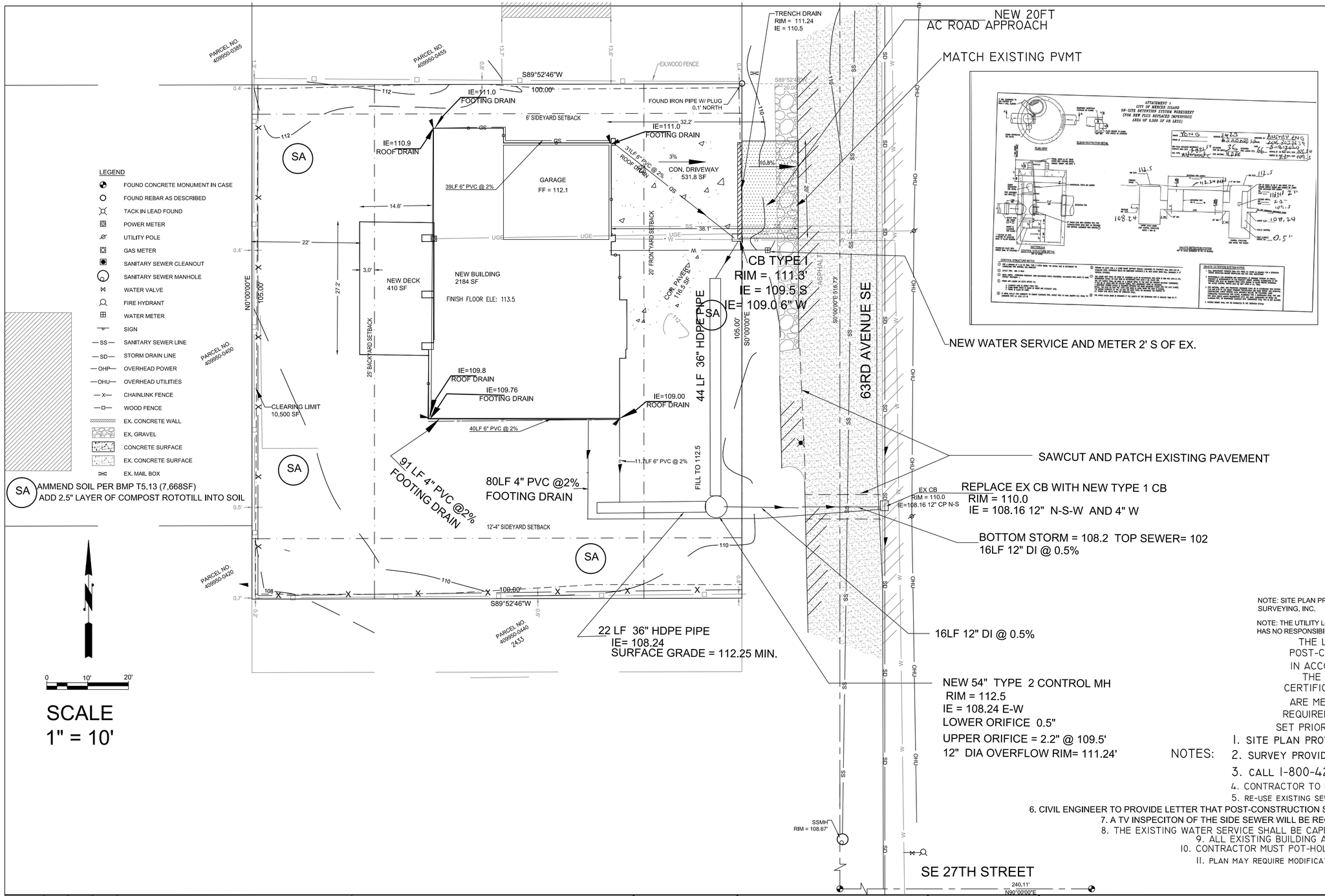

VICINITY MAP

PARCEL # 409950-0430

LEGAL: LAKE VIEW PLACE EAST SEATTLE N 1/2 OF LOT 14 ALL OF LOTS 15 THRU 17
PLat Block: 4
Plat Lot: 14-17

LOPE LESS THAN 15% ALLOWABLE: 40%
LOT SIZE: 10,500 SF
ALLOWABLE IMPERVIOUS AREA: 4,200 SF

1ST LEVEL:	2,120 SF
2ND LEVEL:	2,070 SF
TOTAL	4,190 SF
GROSS FLOOR AREA:	4,190 SF

BASE HEIGHT 30'

TOTAL LOT AREA	10,500 SF
PRO. BUILDING FOOTPRINT INCLUDING GARAGE	2,184 SF
PRO. CONCRETE DRIVEWAY	531.8 SF
PRO. WALKWAY/PAVER	116.5 SF
TOTAL PROPOSED IMPERVIOUS	2,832.3 SF

TOTAL% PROPOSED IMPERVIOUS COVERAGE = 27%

TOTAL NEW AND REPLACED IMPERVIOUS AREAS = 2,944.65 SF OR 28%

TOTAL LOT AREA	10,500 SF
EX. FOOTING BUILDING TBD	1,664 SF
EX. PARKING CARPORT TBD	360 SF
EX. CONCRETE DRIVEWAY TBD	517 SF
EX. CONCRETE TBD	28.33 SF
EX. SHED REMAINED	112.35 SF
TOTAL EX. IMPERVIOUS	2,681.68 SF

TOTAL% EX. IMPERVIOUS COVERAGE = 25.5 %

TOTAL EX. IMPERVIOUS REPLACEMENT = 2,569.33 OR 24.5% COVERAGE

EX. DESKS TBD	1,086.46 SF
EX. BRICKS TBD	407.94 SF
EX. BRICKS REMAINED	105.16 SF

NOTE: SITE PLAN PROVIDED BY ATLAS ARCHITECT AND TOPO PROVIDED BY THOMAS- SITE SURVEYING, INC.

NOTE: THE UTILITY LOCATIONS MUST BE LOCATED BY THE CONTRACTOR BEFORE DIGGING. THE ENGINEER HAS NO RESPONSIBILITY FOR ANY UTILITIES HEREON GRAFTED ON THIS PLAN. CALL 811 BEFORE DIGGING.

THE LAWN AND LANDSCAPE AREAS ARE EXPECTED TO PROVIDE POST-CONSTRUCTION SOIL QUALITY AND DEPTH IN ACCORDANCE WITH BMPT5.13.
THE PROJECT CIVIL ENGINEER MUST PROVIDE A LETTER OF CERTIFICATION TO INSURE THAT THE LAWN AND LANDSCAPE AREAS ARE MEETING THE POST CONSTRUCTION SOIL QUALITY AND DEPTH REQUIREMENTS SPECIFIED ON THE APPROVED PLAN SET PRIOR TO FINAL INSPECTION OF THE PROJECT

NOTES:
1. SITE PLAN PROVIDED BY ATLAS ARCHITECTS
2. SURVEY PROVIDED BY SITE SURVEYING INC.
3. CALL 1-800-424-5555 BEFORE YOU DIG
4. CONTRACTOR TO FIELD VERIFY ELEVATIONS PRIOR TO CONSTRUCTION
5. RE-USE EXISTING SEWER SERVICE
6. CIVIL ENGINEER TO PROVIDE LETTER THAT POST-CONSTRUCTION SOIL QUALITY AND DEPTH REQUIREMENTS ARE MET PER BMP T5.13
7. A TV INSPECITON OF THE SIDE SEWER WILL BE REQUIRED AND MUST BE ACCEPTED BY THE CITY OF MERCER ISLAND
8. THE EXISTING WATER SERVICE SHALL BE CAPPED AND ABANDONED AT THE WATER MAIN IF REPLACED
9. ALL EXISTING BUILDING AND PAVEMENT TO BE REMOVED
10. CONTRACTOR MUST POT-HOLE STREET TO LOCATE UTILITIES PRIOR TO CONSTRUCTION
11. PLAN MAY REQUIRE MODIFICATION AND REVIEW BY CITY AFTER POT-HOLING UTILITIES

NO	DATE	BY	APPR	REVISIONS

ANSTEY ENGINEERING
8627 NE 180th Street
Bothell, WA 98011
Ph: 206-303-7639
Email: benanstey@ansteyengineering.com

5/11/2020

Approved By

BPA 12/17/19	DESIGNED BY DATE
BPA 12/17/19	DRAWN BY DATE
	CHECKED BY DATE

MINGQIN LI & SUN YONG
2423 63RD AVE SE
MERCER ISLAND, WA 98040

SITE & DRAINAGE PLAN

AE2019-84

SHT 1 OF 1

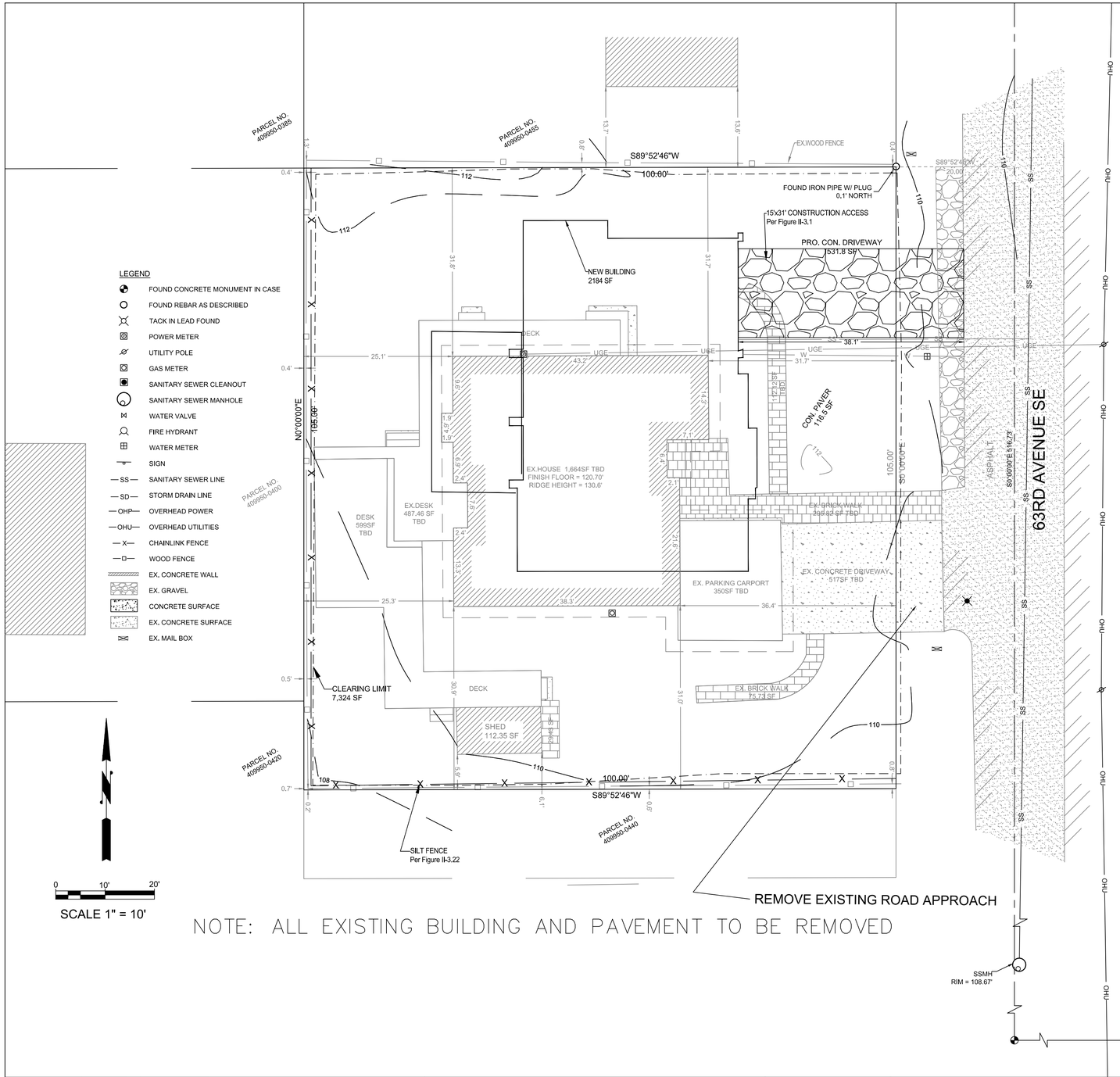

NOTE: ALL EXISTING BUILDING AND PAVEMENT TO BE REMOVED

Figure II-3.1: Stabilized Construction Access

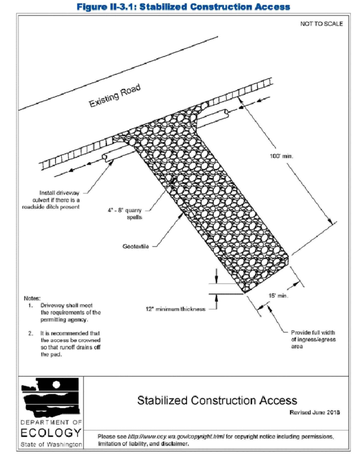

2019 Stormwater Management Manual for Western Washington

Volume II - Chapter 3 - Page 279

Figure II-3.22: Silt Fence

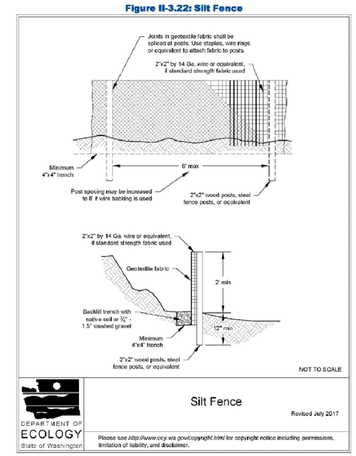

2019 Stormwater Management Manual for Western Washington

Volume II - Chapter 3 - Page 371

VICINITY MAP

PARCEL # 409950-0430

LEGAL: LAKE VIEW PLACE EAST SEATTLE N 1/2 OF LOT 14 ALL OF LOTS 15 THRU 17
PLat Block: 4
Plat Lot: 14-17

LOPE LESS THAN 15% ALLOWABLE: 40%
LOT SIZE: 10,500 SF
ALLOWABLE IMPERVIOUS AREA: 4,200 SF

1ST LEVEL:	2,120 SF
2ND LEVEL:	2,070 SF
TOTAL	4,190 SF
GROSS FLOOR AREA:	4,190 SF

BASE HEIGHT 30'

TOTAL LOT AREA	10,500 SF
PRO. BUILDING FOOTPRINT INCLUDING GARAGE	2,184 SF
PRO. CONCRETE DRIVEWAY	531.8 SF
PRO. WALKWAY/PAVER	116.5 SF
TOTAL PROPOSED IMPERVIOUS	2,832.3 SF

TOTAL% PROPOSED IMPERVIOUS COVERAGE = 27%

TOTAL NEW AND REPLACED IMPERVIOUS AREAS = 2,944.65 SF OR 28%

TOTAL LOT AREA	10,500 SF
EX. FOOTING BUILDING TBD	1,664 SF
EX. PARKING CARPORT TBD	360 SF
EX. CONCRETE DRIVEWAY TBD	517 SF
EX. CONCRETE TBD	28.33 SF
EX. SHED REMAINED	112.35 SF
TOTAL EX. IMPERVIOUS	2,681.68 SF

TOTAL% EX. IMPERVIOUS COVERAGE = 25.5 %

TOTAL EX. IMPERVIOUS REPLACEMENT = 2,569.33 OR 24.5% COVERAGE

EX. DESKS TBD	1,086.46 SF
EX. BRICKS TBD	407.94 SF
EX. BRICKS REMAINED	105.16 SF

NOTE: SITE PLAN PROVIDED BY ATLAS ARCHITECT AND TOPO PROVIDED BY THOMAS- SITE SURVEYING, INC.

NOTE: THE UTILITY LOCATIONS MUST BE LOCATED BY THE CONTRACTOR BEFORE DIGGING. THE ENGINEER HAS NO RESPONSIBILITY FOR ANY UTILITIES HEREON GRAFTED ON THIS PLAN. CALL 811 BEFORE DIGGING.

NO	DATE	BY	APPR	REVISIONS

ANSTEY ENGINEERING
8627 NE 180th Street
Bothell, WA 98011
Ph: 206-303-7639
Email: benanstey@ansteyengineering.com

5/11/2020

Approved By

BPA 12/17/19
DESIGNED BY DATE
BPA 12/17/19
DRAWN BY DATE
CHECKED BY DATE

MINGQIN LI & SUN YONG
2423 63RD AVE SE
MERCER ISLAND, WA 98040

TESC PLAN

AE2019-84

SHT 1 OF 1

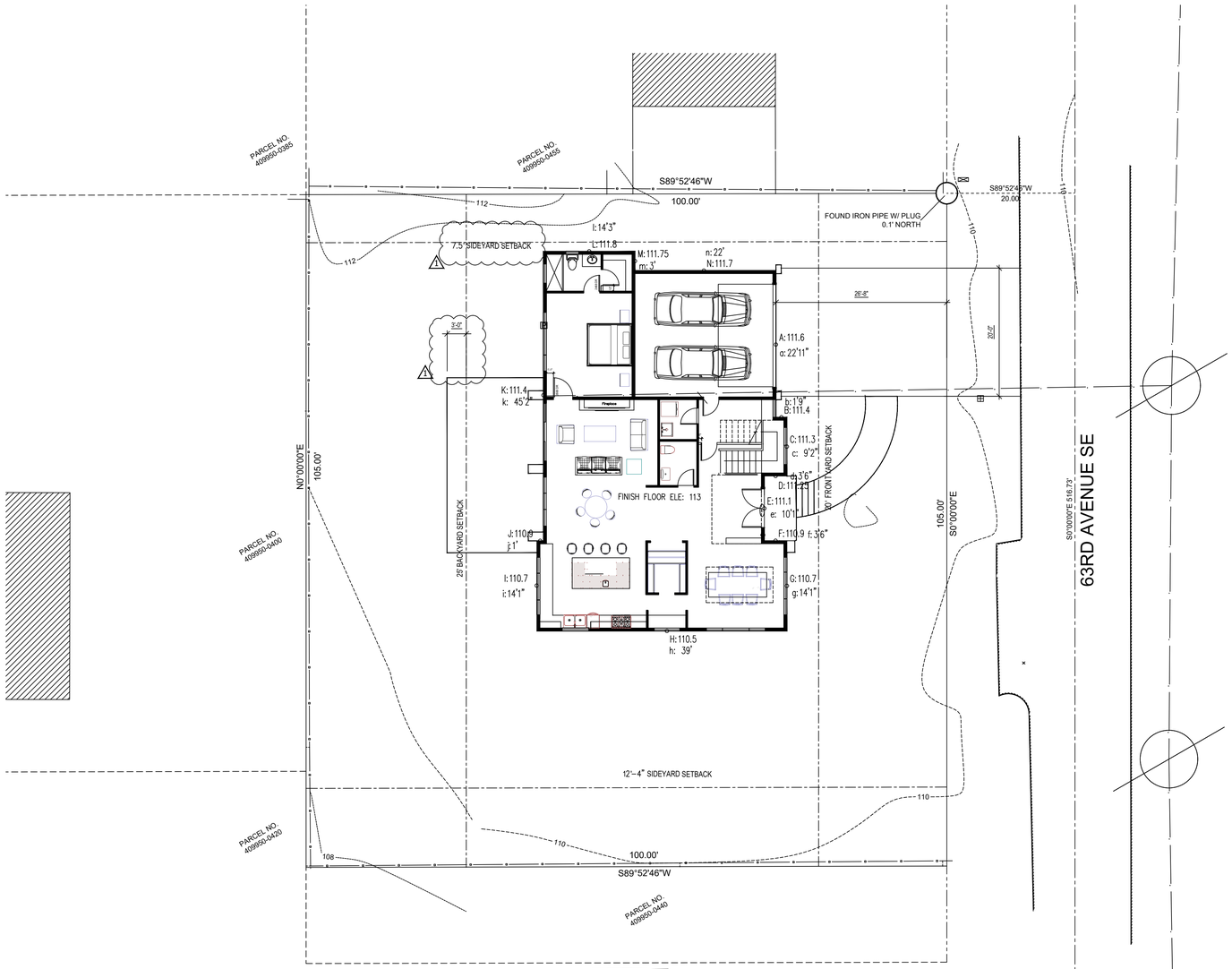

NOTE:
Pursuant of MICC 19.02.020 (F)(3)(d)
"All Japanese knotweed (Polygonum cuspidatum) and Regulated Class A, Regulated Class B, and Regulated Class C weeds identified on the King County Noxious Weed list, as amended, shall be removed from the property."

1 FIRST FLOOR PLAN

SCALE: 1' = 10'-0"

GRAPHIC SCALE

10' 0 5 10' 20' 40'

(IN FEET)
1 inch= 10' ft

N

PROJECT DATA:

ADDRESS	2423 63RD Ave SE, Mercer Island, WA 98040
PARCEL.	409950-0430
ZONE	R8.4
LEGAL DESCRIPTION	LAKE VIEW PLACE EAST SEATTLE N ½ OF LOT 14 ALL OF LOTS 15 THRU 17 PLot Block: 4 Plat Lot: 14-17
PROJECT DESCRIPTION	CONSTRUCTION A NEW SINGLE FAMILY RESIDENCE WITH 2 ATTACHED GARAGE
MAX LOT COVERAGE	SLOPE LESS THAN 15% ALLOWABLE: 40% LOT SIZE: 10,500 SF ALLOWABLE IMPERVIOUS AREA: 4,200 SF MAIN STRUCTURE ROOF AREA: 2,599 SF DRIVEWAY: 531.8 SF TOTAL: 3,130.8 SF IMPERVIOUS %= 29.8% < 40%
HARDSCAPE	116.5 SF
DECK	435 SF
SETBACKS	MIN. FRONT SETBACK: 20' MIN. BACK YARD SETBACK: 25' MIN. SIDE SETBACKS: WHEN LOT IS MORE THAN 90 WIDTH, TOTAL SIDE SETBACK IS 17% OF LOT WIDTH LOT WIDTH: 107.33', SIDE YARD TOTAL 17%= 18.2' MINI SIDE YARD 33% = 7.5'
F.A.R. CALCULATION	LOT AREA: 10500 SF 5000 SF OR FAR 40% (WHICH IS LESS) = 4,200 SF 1ST LEVEL: 1710 SF GARAGE: 443 SF 2ND LEVEL: 2038 SF TOTAL 4,191 SF GROSS FLOOR AREA: 4,191 SF
BASE HEIGHT	30'

AVERAGE EXISTING GRADE & HEIGHT CALCULATION

MIDPOINT ELEVATION	WALL SEGMENT LENGTH
A=111.3'	a=22'11"
B=111.1'	b=1'9"
C=111'	c=9'2"
D=110.9'	d=3'6"
E=110.8'	e=10'1"
F=110.7'	f=3'6"
G=110.6'	g=14'1"
H=110.3'	h=39'
I=110.5'	i=14'1"
J=110.6'	j=1'
K=111.3'	k=45'2"
L=111.7'	l=14'3"
M=111.6'	m=3'
N=111.5'	n=22'

AVERAGE BUILDING ELEVATION:

$$=\frac{(A*a+B*b+C*c+D*d+E*e+F*f+G*g+H*h+I*i+J*j+K*k+L*l+M*m+N*n)}{a+b+c+d+e+f+g+h+i+j+k+l+m+n}$$

$$=\frac{(111.3*22.917+111.1*1.75+111*9.17+110.9*3.5+110.8*10.083+110.7*3.5+110.6*14.083+110.3*39+110.5*14.083+110.6*1+111.3*45.167+111.7*14.25+111.6*3+111.5*22)}{202.503}$$

$$=\frac{2550.66+194.425+1017.87+388.15+1117.2+387.45+1557.58+4301.7+1556.17+110.6+5027+1591.725+334.8+2453}{202.503}$$

$$=\frac{22588.33}{202.503}=111.5$$

AVERAGE BUILDING ELEVATION: =111.5'

Atlas Associates International
5280 Highland Dr.
Bellevue, washington
98006
206.488.3688 v
gengtan@gmail.com
www.Atlascreate.com

Mercer New House

2423 63rd Ave SE
Mercer Island, WA 98040

project no: 53-19

8-485 REGISTERED ARCHITECT GENG TAN STATE OF WASHINGTON

Issue/Revision:

1 4-29-2020 City Permit Comments Revision

NO.	ISSUED FOR	DATE

© 2015 ATLAS ARCHITECTS COMPANY
THESE DRAWINGS ARE THE PROPERTY OF ATLAS ARCHITECTS COMPANY AND ARE NOT TO BE REPRODUCED IN ANY MANNER, EXCEPT WITH THE PRIOR WRITTEN PERMISSION OF ATLAS.

Drawn By	Checked By	Date
TG/UW	TG	8/2017

Sheet Title
SITE PLAN

Scale 1' = 10'-0"

Sheet Number
A1.0

Xref .\x-title-WANGJIAN HOUSE.dwg

ENERGY NOTES:

1. ALL EXTERIOR NEW WALLS SHALL HAVE R21 BATT INSULTATION
2. NEW ROOF @TRUSS SHALL HAVE R49 INSULATION
3. ALL NEW WINDOW SHOULD HAVE U FACTOR 0.30 OR BETTER.
4. NEW SLAB ON GRADE FOR ADDITION SHALL HAVE R10 RIGID INSULATION.
5. ENERGY CREDITS :
   A. 3a - 1 CREDIT- HVAC EQUIPMENT MUST HAVE A MINIMUM EFFICIENCY AS FOLLOWS:
      *FURNACE (GAS, PROPANE OR OIL-FIRED): AFUE OF 94%
      *BOILER (GAS, PROPANE OR OIL-FIRED): AFUE OF 92%
   B. 5c-1.5 CREDIT-GAS, PROPANE OR OIL WATER HEATER WITH A MINIMUM EF OF 0.91.
   C. 2b-1.0 CREDIT-AIR LEAKAGE CONTROL AND EFFICIENT VENTILATION:
      -REDUCE THE TESTED AIR LEAKAGE TO 2.0 AIR CHANGES PER HOUR MAX.
      -ALL WHOLE HOUSE VENTILATION SHALL BE MET WITH A HEAT RECOVERY VENTILATION SYSTEM WITH MINI SENSIBLE HEAT RECOVERY EFFICIENCY OF 0.70.

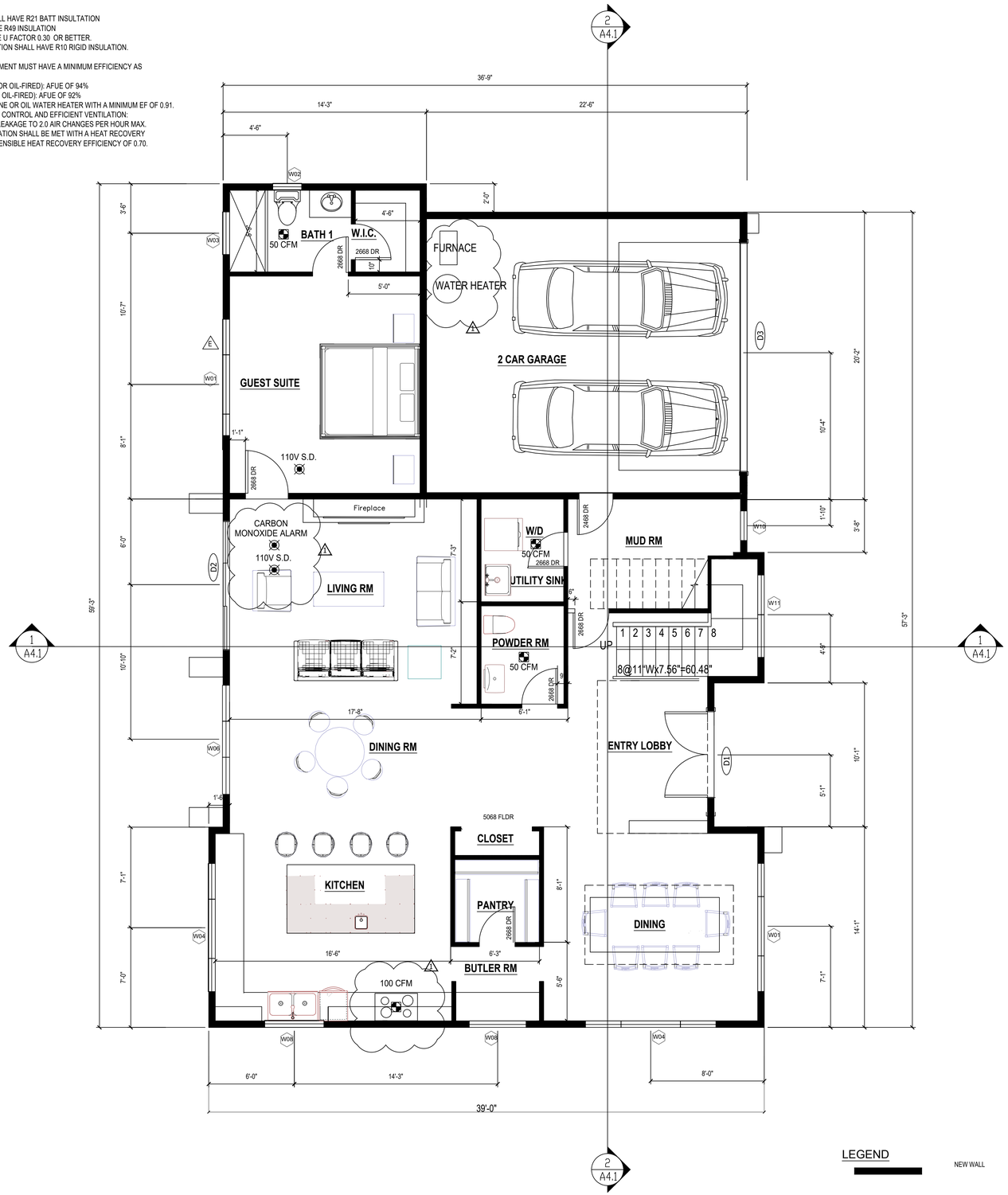

1 FIRST FLOOR PLAN
SCALE: 1/4" = 1'-0"

PLAN NOTES:

1. USE CONVENTIONAL FRAMING AND SHEATHING U.N.O.
2. ALL EXTERIOR WALLS TO BE 2x6 FRAMING U.N.O.
3. ALL INTERIOR WALLS TO BE 2x4 FRAMING U.N.O.
4. ALL DOOR JAMBS TO BE SET OFF WALLS 6" TYP. U.N.O.
5. ALL DIMENSIONS ARE TO FACE OF FRAMING U.N.O.
6. ALL EXHAUST FANS ARE TO VENTED TO OUTSIDE.
7. DOOR HT. AT THIS FLOOR IS 6'-8", TYP.
8. ALL SMOKE DETECTORS MUST BE PROVIDED w/ PRIMARY POWER FROM BUILDING WIRING, PROVIDED w/ BATTERY BACKUP, AND BE INTERCONNECTED.
9. ESCAPE (EGRESS) WINDOW MUST HAVE A CLEAR OPENABLE AREA OF 5.7 S.F. w/ A MINIMUM NET CLEAR HEIGHT OF 24" AND WIDTH DIMENSION OF 20". THE SILL HEIGHT MUST NOT BE MORE THAN 44" ABOVE THE FLOOR.
10. ALL EXTERIOR COLUMNS, BEAMS, AND JOISTS THAT ARE EXPOSED TO THE WEATHER MUST BE PRESSURE-TREATED.
11. SHOWER COMPARTMENTS AND WALLS AROUND BATHTUBS WITH SHOWERS SHALL BE FINISHED WITH A SMOOTH NON-ABSORBANT SURFACE TO NOT LESS THAN 70" ABOVE THE DRAIN PER IBC SECTION 1210.2.3 AND 72" PER IRC SECTION 307.2
    WATER-RESISTANT BACKING IS REQUIRED WHERE SHOWER & WATER CLOSET WALLS WILL BE FINISHED WITH TILE OR WALL PANELS. WHERE WATER RESISTANT GYPSUM IS USED A VAPOR BARRIER SHALL NOT BE USED.
    IBC SECTION 2509 AND 1210.2
12. EMERGENCY ESCAPE AND RESCUE OPENINGS
    SHALL BE INSTALLED IN EVERY SLEEPING ROOM BELOW THE 4TH STORY AND IN BASEMENTS.
    * OPENABLE W/O KEYS OR SPECIAL TOOLS
    * MIN. 5.7 SF NET CLR OPENABLE AREA
    * MIN. 24" NET CLR OPENABLE HEIGHT
    * MIN. 20" NET CLR OPENABLE WIDTH
    * MAX. 44" FINISHED SILL HEIGHT
    IRC SECTION R310 & IBC SECTION 1029.
13. WHOLE HOUSE MECHANICAL VENTILATION SYSTEMS SHALL BE DESIGNED IN ACCORDANCE WITH IRC SECTION M1507.3.1 THROUGH M1507.3.7

    EACH DWELLING UNIT OR GUEST ROOM SHALL BE EQUIPPED W/ A VENTILATION SYSTEM COMPLYING W/ SECTION M1507.3.4, M1507.3.5,M1507.3.6 OR M1507.3.7. COMPLIANCE IS ALSO PERMITTED TO BE DEMOSTRATED THROUGH COMPLIANCE W/ THE INTERNATIONAL MECHANICAL CODE 403.8 (M1507.3)
14. STAIR LIGHTING ALL STAIRWAYS SHALL BE PROVIDED WITH LIGHT SOURCES. LIGHT ACTIVATION CONTROLS SHALL BE ACCESSIBLE AT THE TOP AND BOTTOM OF INTERIOR STAIRWAYS AND WITHIN DWELLING UNIT FOR EXTRIOR STAIRS
    IRC SECTIONS R303.7 & R303.8
15. Guards & Handrails: Refer to Table R301.5 2015 IRC, the minimum uniformly distributed live load shall be as a single concentrated load applied in any direction at any point along the top 200 pounds per square foot. Glazing used in handrail assemblies and guards shall be designed with a safety factor of 4. The safety factor shall be applied to each of the concentrated loads applied to the top of the rail and to the load on the in-fill components. These loads shall be determined independent of one another, and loads are assumed not to occur with any other live load. 1
16. GARAGE SEPARATION:
    REQUIRES $\frac{1}{2}$" GWB ON GARAGE SIDE. $\frac{5}{8}$" TYPE "X" GWB IS REQUIRED WHERE THERE IS LIVING SPACE ABOVE. SUPPORTING COLUMNS, WALLS AND BEAMS USE $\frac{1}{2}$" GWB. IRC R 302.6.
17. GARAGE FLOOR SURFACE:
    THE AREA OF FLOOR USED FOR VEHICLE PARKING SHALL BE SLOPED TO FACILITATE THE MOVEMENT OF LIQUIDS TOWARDS THE MAIN VEHICLE ENTRY DOOR WAY. IRC R 309.1.
18. ANCHORAGE OF APPLIANCE:
    APPLIANCES DESIGNED TO BE FIXED IN POSITION SHALL BE FASTENED OR ANCHORED IN AN APPROVED MANNER. UNITS SHALL BE ANCHORED OR STRAPPED TO RESIST HORIZONTAL DISPLACEMENT CAUSED BY EARTHQUAKE MOTION. STRAPPING SHALL BE AT POINTS WITHIN THE UPPER ONE-THIRD AND LOWER ONE-THIRD OR THE APPLIANCE'S VERTICAL DIMENSIONS. AT THE LOWER POINT, THE STRAPPING SHALL MAINTIAN A MINIMUM DISTANCE OF 4" ABOVE THE CONTROLS. UPS 507.2.
19. UNDER-FLOOR VENTILATION:
    SHALL NOT BE LESS THAN 1 S.F. FOR EACH 300 S.F. OF UNDER-FLOOR AREA. IRC R408.2.
20 ACCESS OPENINGS THROUGH THE FLOOR:
    SHALL BE MINIMUM OF 18"X24" AND A MINIMUM OF 16" X24" THROUGH THE PERIMETER WALL PER IRC R408.4.

VENTILATION REQUIREMENTS:

LOCAL EXHAUST (SRC M1507.3):

BATHS, TOILET ROOMS & LAUNDRY ROOM	50 CFM INTERMITTENT
KITCHENS	100 CFM INTERMITTENT

-PROVIDE MANUAL SWITCH, DEHUMIDISTAT, TIMER OR OTHER MEANS OF CONTROL.
-RANGE HOOD: EXHAUST TO EXTERIOR INDEPENDENT OF ALL OTHER DUCTS. PROVIDE A BACK DRAFT DAMPER (SRC M1503)
-PROVIDE CLOTHES DRYER EXHAUST DUCT INDEPENDENT OF ALL OTHER DUCTS.
-TERMINATE EXHAUST OPENING AT NOT LESS THAN 3 FEET FROM PROPERTY LINES, MIN. 3 FT FROM OPENING INTO THE BUILDING , (SRC M1506.3)
-EXHAUST FAN VENTS SHALL TERMINATE OUTDOORS AND NOT IN ATTICS, SOFFITS, RIDGE VENTS, OR CRAWL SPACES.

WHOLE HOUSE (SRC M1507.3 and SRC Table M1507.3.3(1)):

90 CFM CONTINUOUS

MIN 4 SI SCREENED OURDOOR AIR INLET -WALL PORT OR WINDOW VENT AS REQUIRED
- PROVIDE 24 HOUR CLOCK TIMER CONTROL.
- PROVIDE SCREENED OUTDOOR AIR INLETS OF 4 SQ IN PER HABITABLE ROOM-WALL PORT OR WINDOW VENT AS REQUIRED..
- WHF FAN TO BE MAXIMUM 1.0 SONE (SRC M1507.3.4.2)

CRAWL SPACE VENT CALCULATION:

VENT CALCULATION:
CRAWL SPACE TOTAL AREA: 1,618.4 SQ FT
VENT $\frac{1}{150}$ VENT AREA SQ FT
8X16 FOUNDATION VENT .89 SQFT
13 VENTS EVENLY SPREAD AROUND THE PERIMETER OF CRAWL SPACE AREA.

ENERGY NOTES:

1. ALL EXTERIOR NEW WALLS SHALL HAVE R21 BATT INSULTATION
2. NEW ROOF @TRUSS SHALL HAVE R49 INSULATION
3. ALL NEW WINDOW SHOULD HAVE U FACTOR 0.30 OR BETTER.
4. NEW SLAB ON GRADE FOR ADDITION SHALL HAVE R10 RIGID INSULTATION.

atlas architects
Atlas Associates International
5280 Highland Dr.
Bellevue, washington
98006
206.488.3688 v
gengtan*gmail.com
www.Atlascreate.com

Mercer New House

2423 63rd Ave SE
Mercer Island, WA 98040

project no: 53-19

8-485 REGISTERED ARCHITECT GENG TAN STATE OF WASHINGTON

Issue/Revision:

1 5-14-2020 City Permit Comments Revision

NO.	ISSUED FOR	DATE

© 2015 ATLAS ARCHITECTS COMPANY
THESE DRAWINGS ARE THE PROPERTY OF ATLAS ARCHITECTS COMPANY AND ARE NOT TO BE REPRODUCED IN ANY MANNER, EXCEPT WITH THE PRIOR WRITTEN PERMISSION OF ATLAS.

Drawn By	Checked By	Date
TG/UW	TG	8/2017

Sheet Title
FIRST FLOOR PLAN

Scale 1/4" = 1'-0"

Sheet Number
A2.1

Xref .\x-title-WANGJIAN HOUSE.dwg

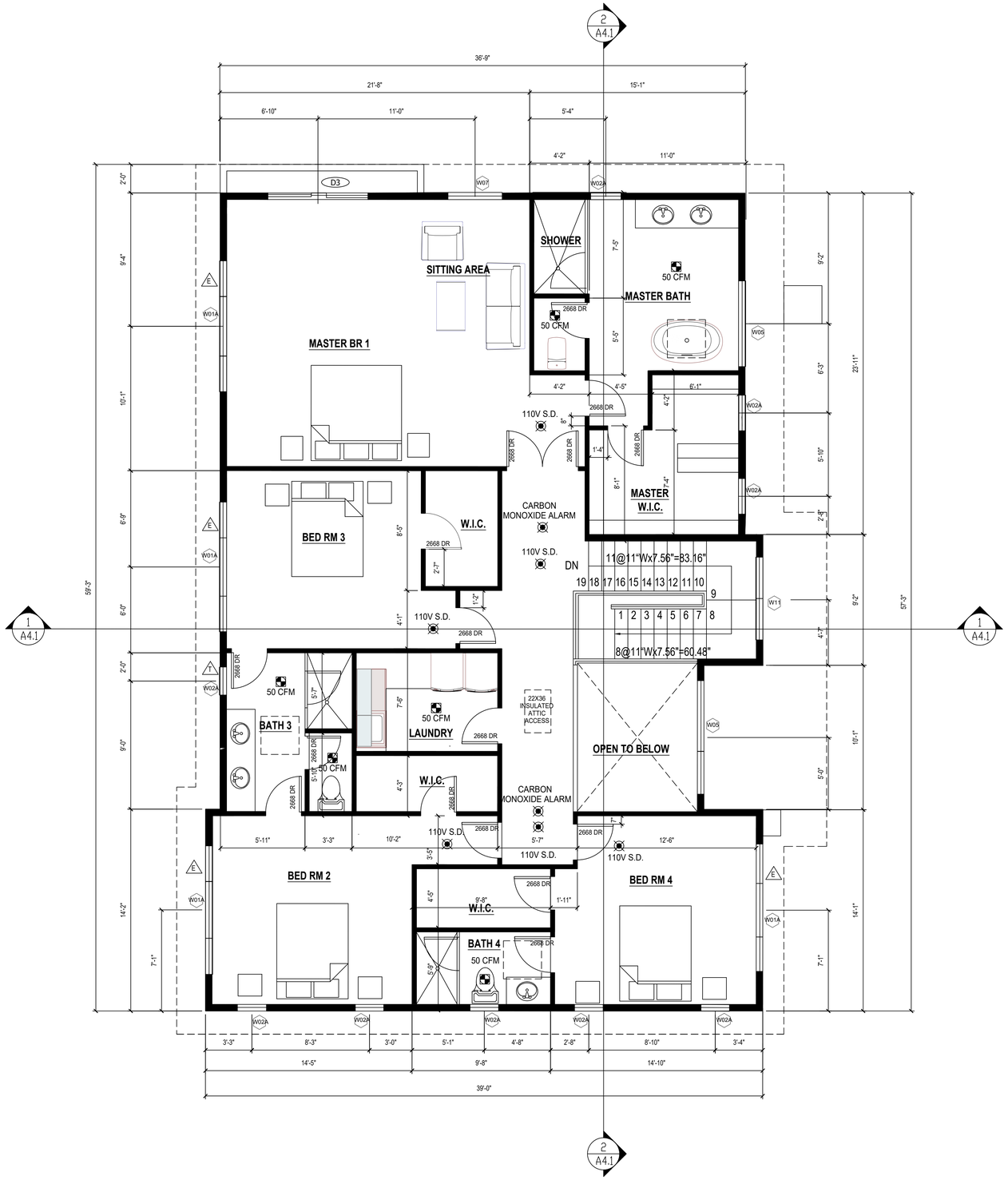

1 SECOND FLOOR PLAN

SCALE: 1/4" = 1'-0"

PLAN NOTES:

1. USE CONVENTIONAL FRAMING AND SHEATHING U.N.O.
2. ALL EXTERIOR WALLS TO BE 2x6 FRAMING U.N.O.
3. ALL INTERIOR WALLS TO BE 2x4 FRAMING U.N.O.
4. ALL DOOR JAMBS TO BE SET OFF WALLS 6" TYP. U.N.O.
5. ALL DIMENSIONS ARE TO FACE OF FRAMING U.N.O.
6. ALL EXHAUST FANS ARE TO VENTED TO OUTSIDE.
7. DOOR HT. AT THIS FLOOR IS 6'-8", TYP.
8. ALL SMOKE DETECTORS MUST BE PROVIDED w/ PRIMARY POWER FROM BUILDING WIRING, PROVIDED w/ BATTERY BACKUP, AND BE INTERCONNECTED.
9. ESCAPE (EGRESS) WINDOW MUST HAVE A CLEAR OPENABLE AREA OF 5.7 S.F. w/ A MINIMUM NET CLEAR HEIGHT OF 24" AND WIDTH DIMENSION OF 20". THE SILL HEIGHT MUST NOT BE MORE THAN 44" ABOVE THE FLOOR.
10. ALL EXTERIOR COLUMNS, BEAMS, AND JOISTS THAT ARE EXPOSED TO THE WEATHER MUST BE PRESSURE-TREATED.
11. SHOWER COMPARTMENTS AND WALLS AROUND BATHTUBS WITH SHOWERS SHALL BE FINISHED WITH A SMOOTH NON-ABSORBANT SURFACE TO NOT LESS THAN 70" ABOVE THE DRAIN PER IBC SECTION 1210.2.3 AND 72" PER IRC SECTION 307.2
    WATER-RESISTANT BACKING IS REQUIRED WHERE SHOWER & WATER CLOSET WALLS WILL BE FINISHED WITH TILE OR WALL PANELS. WHERE WATER RESISTANT GYPSUM IS USED A VAPOR BARRIER SHALL NOT BE USED.
    IBC SECTION 2509 AND 1210.2
12. EMERGENCY ESCAPE AND RESCUE OPENINGS
    SHALL BE INSTALLED IN EVERY SLEEPING ROOM BELOW THE 4TH STORY AND IN BASEMENTS.
    * OPENABLE W/O KEYS OR SPECIAL TOOLS
    * MIN. 5.7 SF NET CLR OPENABLE AREA
    * MIN. 24" NET CLR OPENABLE HEIGHT
    * MIN. 20" NET CLR OPENABLE WIDTH
    * MAX. 44" FINISHED SILL HEIGHT
    IRC SECTION R310 & IBC SECTION 1029.
13. WHOLE HOUSE MECHANICAL VENTILATION SYSTEMS SHALL BE DESIGNED IN ACCORDANCE WITH IRC SECTION M1507.3.1 THROUGH M1507.3.7

    EACH DWELLING UNIT OR GUEST ROOM SHALL BE EQUIPPED W/ A VENTILATION SYSTEM COMPLYING W/ SECTION M1507.3.4, M1507.3.5,M1507.3.6 OR M1507.3.7. COMPLIANCE IS ALSO PERMITTED TO BE DEMOSTRATED THROUGH COMPLIANCE W/ THE INTERNATIONAL MECHANICAL CODE 403.8 (M1507.3)
14. STAIR LIGHTING ALL STAIRWAYS SHALL BE PROVIDED WITH LIGHT SOURCES. LIGHT ACTIVATION CONTROLS SHALL BE ACCESSIBLE AT THE TOP AND BOTTOM OF INTERIOR STAIRWAYS AND WITHIN DWELLING UNIT FOR EXTRIOR STAIRS
    IRC SECTIONS R303.7 & R303.8
15. Where required, guardrails must be designed and installed to resist a concentrated load of 200 pounds applied in any directions at any point on the handrail or top rail and transfer that load through the support to the structure in accordance with ASCE 7-10. The connection of the guardrail/handrail support post shall be capable of resisting all resulting loads.
16. ATTIC VENTILATION:
    SHALL NOT BE LESS THAN 1S.F. FOR EACH 150S.F. OF ATTIC AREA OR 1 S.F. FOR EACH 300 S.F. WHERE 40% TO 50% OF VENTS ARE WITHIN 3' OF THE RIDGE. IRC R807.1.
    SEE ROOF PLAN A3.0 FOR VENT CALC.
17. ACCESS OPENINGS:
    THROUGH THE CEILING SHALL BE A MINIMUM 22"X30" WITH A MINIMUM HEADROOM OF 30" IRC. R 807.1.
18. EXISTING VENTILATION OPENNINGS:
    VERIFY THAT ANY EXISTING ATTIC SPACE VENT OPENINGS THAT ARE CONCEALED BY THE NEW WORK ARE ADDED TO THE NEW REQUIRED VENT OPENING AREA.

ENERGY NOTES:

1. ALL EXTERIOR NEW WALLS SHALL HAVE R21 BATT INSULTATION
2. NEW ROOF @TRUSS SHALL HAVE R49 INSULATION
3. ALL NEW WINDOW SHOULD HAVE U FACTOR 0.30 OR BETTER.
4. NEW SLAB ON GRADE FOR ADDITION SHALL HAVE R10 RIGID INSULTATION.

LEGEND

NEW WALL

atlas architects

Atlas Associates International
5280 Highland Dr.
Bellevue, washington
98006
206.488.3688 v
gengtan@gmail.com
www.Atlascreate.com

Mercer New House

2423 63rd Ave SE
Mercer Island, WA 98040

project no: 53-19

8485 REGISTERED ARCHITECT GENG TAN STATE OF WASHINGTON

Issue/Revision:

NO.	ISSUED FOR	DATE

© 2015 ATLAS ARCHITECTS COMPANY
THESE DRAWINGS ARE THE PROPERTY OF ATLAS ARCHITECTS COMPANY AND ARE NOT TO BE REPRODUCED IN ANY MANNER, EXCEPT WITH THE PRIOR WRITTEN PERMISSION OF ATLAS.

Drawn By	Checked By	Date
TG/UW	TG	8/2017

Sheet Title
SECOND FLOOR PLAN

Scale 1/4" = 1'-0"

Sheet Number
A2.2

Xref .\x-title-WANGJIAN HOUSE.dwg

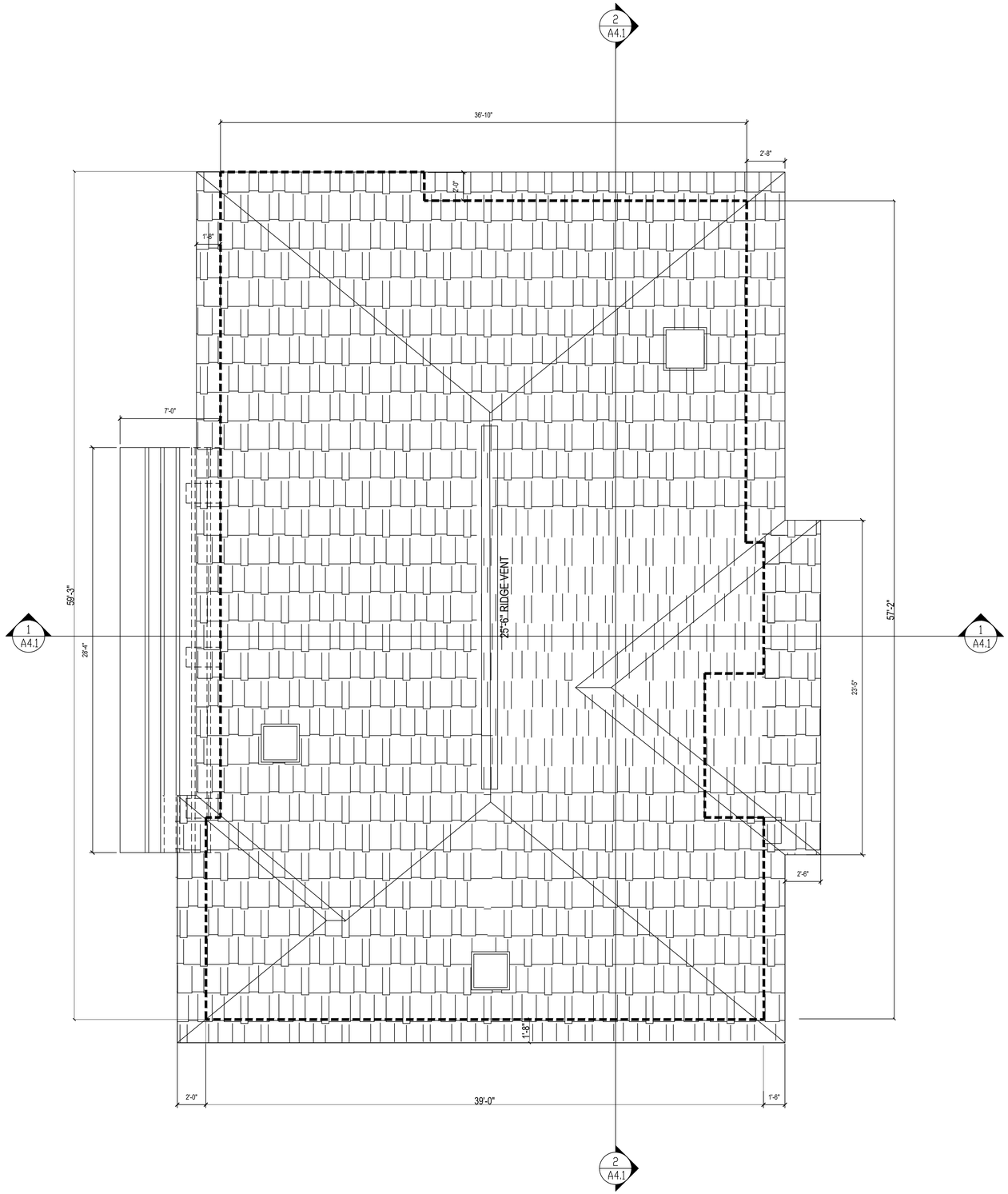

1 ROOF PLAN
SCALE: 1/4" = 1'-0"

ROOF PLAN NOTES:

A 22X30 INCH ACCESS OPENING SHALL BE LOCATED IN A HALLWAY. CORRIDOR OR OTHER READILY ACCESSIBLE LOCATION. ATTICS WITH A MAXIMUM VERTICAL HEIGHT OF LESS THAN 30 INCHES OR AREA LESS THAN 30 SQFT IN AREA NEED NOT BE PROVIDED WITH ACCESS OPENING. A 30-INCH MINIMUM CLEAR HEADROOM IN THE OPENING. PROVIDE A RIM TO HOLD INSULATION OUT OF ACCESS DOORWAY, INSULATE ACCESS HATCH WITH R-49 RIGID FOAM BUILD UP, GASKET ATTIC ACCESS DOOR AT CEILING.

CONTINUOUS RIDGE VENT TYPICAL ON ALL RIDGES, DO NOT INSTALL ON HIP OR RIDGES SHORTER THAN 36".

GUTTERS: CONTINUOUS ALUMINUM GUTTERS, SLOPE TO DOWNSPOUTS PER BEST INDUSTRY PRACTICE. 5"K STYLE WITH 2X3 ALUMINUM DOWNSPOUTS. COLOR SELECTION BY OWNER.

RIDGE VENT: UNDER RIDGE SHINGLE OR METAL RIDGE TYPE: 1" TALL, MADE OF HEAT RESISTANT POLPROPYLENE OR EQUIVALENT; WITH 20 SQ INCH VENTILATION (NFVA) PER LINEAL FOOT.

EAVE VENT: (3) 2" DIAMETER HOLES IN SOLID BLOCKING, SCREEN WITH $\frac{1}{8}$" METAL SCREEN.

ROOF NOTES:

PROTECT ROOF SHEATHING AS SOON AS POSSIBLE BY INSTALLING ROOFING MANUFACTURE RECOMMENDED BASE SHEET WITHIN A MAXIMUM 1 WEEK PERIOD AFTER INSTALLATION OF THE SHEATHING. CALL FOR INTERMEDIATE NALNG INSPECTION IF REQUIRED TO ACCOMPLISH THIS REQUIREMENT.

USE DRIP FLASHING IN COMBINATION WITH 90# ROLL STARTER COURSE AT EAVE.

INSTALL ALL ROOFING, FLASHING, AND CAPS PER MANUFACTURERS SPECIFICATIONS AND BEST INDUSTRY PRACTICES.

ALL VALLEYS TO RECEIVE METAL VALLEY FLASHING, MIN 24 GA.

ATTIC VENTILATION:

THE ATTIC VENTILATION REQUIRED IS ONE SQUARE FOOT FOR EACH 300 SQFT OF ATTIC AREA, 50% TO 80% OF VENTILATION MUST BE 36' OR MORE ABOVE THE EAVE.

ATTIC AREA	2146 SQFT
VENTILATION REQ	7.15 SQFT
27 RIDGE VENT @ .14 SF/LF	3.78 SQFT
(52) EAVE BLOCK @.065 SF EA	3.38 SQFT
TOTAL VENTILATION PROVIDED	7.16 SQFT

LEGEND

ROOF LINE

EXTERIOR WALL LINE BELOW

Atlas Associates International
5280 Highland Dr.
Bellevue, washington
98006
206.488.3688 v
gengtan@gmail.com
www.Atlascreate.com

Mercer New House

2423 63rd Ave SE
Mercer Island, WA 98040

project no: 53-19

8485 REGISTERED ARCHITECT
GENG TAN
STATE OF WASHINGTON

Issue/Revision:

NO.	ISSUED FOR	DATE

© 2015 ATLAS ARCHITECTS COMPANY
THESE DRAWINGS ARE THE PROPERTY OF ATLAS ARCHITECTS COMPANY AND ARE NOT TO BE REPRODUCED IN ANY MANNER, EXCEPT WITH THE PRIOR WRITTEN PERMISSION OF ATLAS.

Drawn By	Checked By	Date
TG/UW	TG	8/2017

Sheet Title
ROOF PLAN

Scale 1/4" = 1'-0"

Sheet Number
A2.4

Xref .\x-title-WANGJIAN HOUSE.dwg

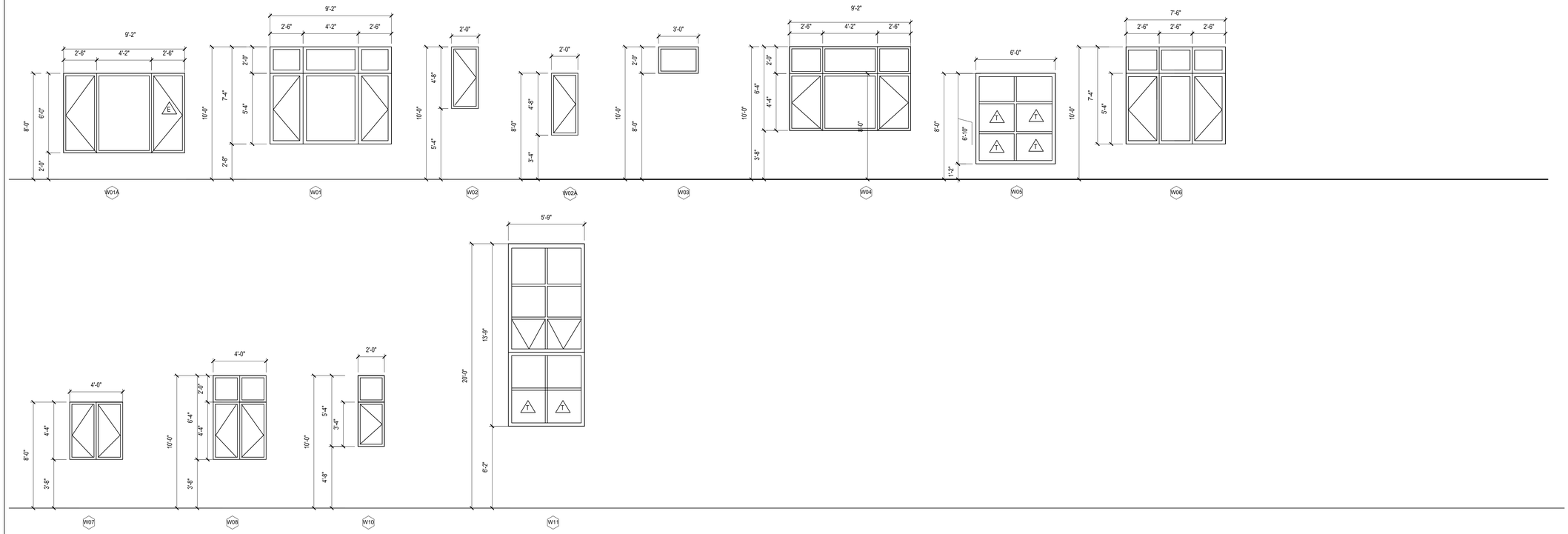

1 WINDOW SCHEDULE

SCALE: 1/4" = 1'-0"

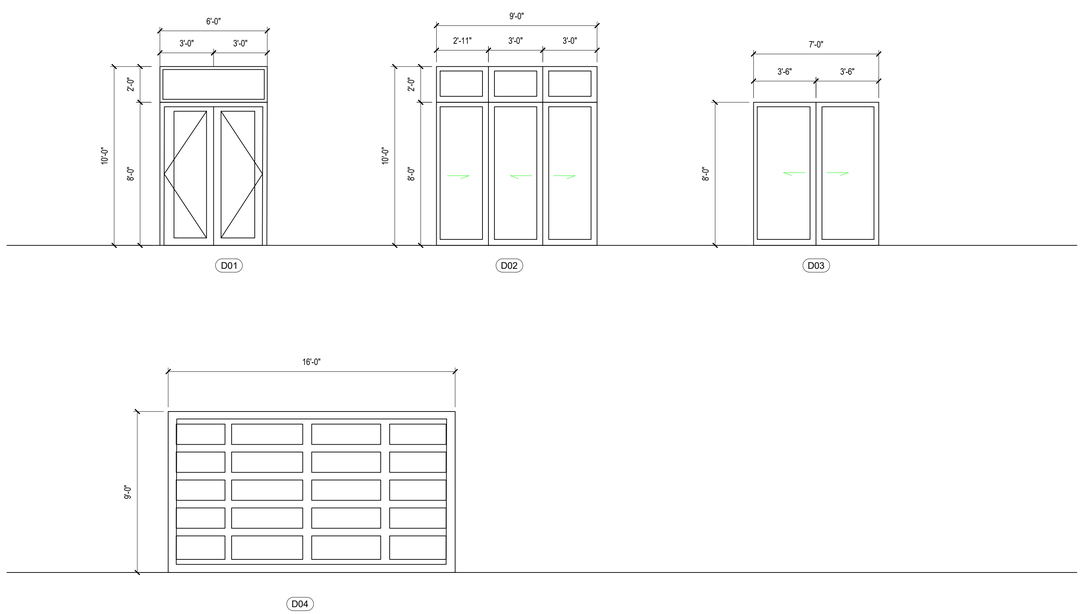

2 DOOR SCHEDULE

SCALE: 1/4" = 1'-0"

WINDOWS

NUMBER	QTY	WIDTH	HEIGHT	EGRESS	TEMPERED	TYPE	NOTE	U- Factor
W 01A	4	9'-2"	6'-0"	Y		PICTURE/CASEMENT		0.3
W 01	2	9'-2"	7'-4"	Y		PICTURE/CASEMENT		0.3
W02	1	2'-0"	4'-8"			PICTURE/CASEMENT		0.3
W02A	9	2'-0"	4'-8"		Y	PICTURE/CASEMENT		0.3
W03	1	3'-0"	2'-0"			PICTURE/ FIXED		0.3
W04	2	9'-2"	6'-4"			PICTURE/CASEMENT		0.3
W05	2	6'-0"	6'-10"		Y	PICTURE		0.3
W06	1	7'-6"	7'-4"			PICTURE/CASEMENT		0.3
W07	1	4'-0"	4-4"			PICTURE/CASEMENT		0.3
W08	2	4'-0"	6'-4"			PICTURE/CASEMENT		0.3
W10	7	2'-0"	5'-4"			PICTURE/CASEMENT		0.3
W11	1	5'-9"	13'-9"		Y	PICTURE/AWNING		0.3

E – EGRESS WINDOW T – TEMPERED GLASS

DOOR

NUMBER	QTY	WIDTH	HEIGHT	EGRESS	TEMPERED	MATERIAL	OPERATION
D 01	1	6'-0"	10'-0"	N	YES	VINYL	SWING
D 02	1	9'-0"	10'-0"	YES	YES	VINYL	SLIDER
D 03	1	6'-0"	8'-0"	N	YES	VINYL	SLIDER
D 04	1	16'-0"	9'-0"	N	N	STEEL	ROLLING

* Window will meet one of the below requirements:
1. Windows whose openings will not allow a 4-inch-diameter (102 mm) sphere to pass through the opening when the opening is in its largest opened position.
2. Openings that are provided with window fall prevention devices that comply with ASTM F 2090.
3. Windows that are provided with window opening control devices that comply with Section R312.2.2.

WINDOW & DOOR NOTES

WINDOWS WHERE SILL IS MORE THAN 6' ABOVE GRADE SHALL HAVE A MINIMUM FINISHED SILL HEIGHT OF 24" ABOVE FINISHED FLOOR.

ALL GLAZING IN DOORS OR GLAZING WITHIN 24" MEASURED HORIZONTALLY FROM EDGE OF AN OPENING DOOR TO BE TEMPERED GLASS. FIXED PANELS IN SLIDING GLASS DOORS OR SIDELIGHTS SHALL BE TEMPERED GLASS, BUT ADJOINING GLAZING FURTHER THAN 24" FROM THE OPENING DOOR SHALL NOT BE REQUIRED TO BE SAFETY GLAZING.

ALL GLAZING WITHIN 18" OF FLOOR OR WALKING SURFACE SHALL BE TEMPERED.

WINDOWS AND DOORS ARE CALLED OUT AS TO THE NOMINAL SIZE OF EACH UNIT. THE CONTRACTOR SHALL VERIFY ROUGH-IN DIMENSIONS WITH THE WINDOW AND DOOR MANUFACTURER PRIOR TO FRAMING OPENINGS.

ALL WINDOWS AND EXTERIOR DOORS SHALL BE INSTALLED USING BEST PRACTICES AND AS SPECIFIED BY THE MANUFACTURER, INCLUDING WRAPPING ALL FRAMED OPENINGS WITH FLEXIBLE FLASHING, AND SETTING ALL WINDOW FLANGES ON A $\frac{3}{8}$" BEAD OF CAULKING. AT TOP OF WINDOWS & EXTERIOR DOORS, INSTALL MIN 24 GA GALVANIZED FLASHING BETWEEN SIDING AND ANY WINDOW CASING. CAULK ALL PRIMED CASINGS AND TRIM TO WINDOW OR DOOR AND TO PRIMED SIDING, PRIOR TO FINISH PAINTING.

AVOID JOINTS IN FLASHING. IF A JOINT IS REQUIRED, LAY A 4" LONG PEACE OF THE FLASHING UNDER THE JOINT, AND INSTALL FLASHING OVER THIS BACKING PIECE WITH A BUTT JOINT LAID IN CAULKING.

ALL EXTERIOR TRIM SHALL BE HARDIE-TRIM OR CEDAR- DO NOT USE "WHITE WOOD"

USE OIL BASE PRIMER OR OIL BASED STAIN ON ALL WOOD EXPOSED TO EXTERIOR OF BUILDING PRIOR TO INSTALLATION. PRIME OR STAIN (4) SIDES AND END CUTS.

Atlas Associates International
5280 Highland Dr.
Bellevue, washington
98006
206.488.3688 v
gengtan@gmail.com
www.Atlascreate.com

Mercer New House

2423 63rd Ave SE
Mercer Island, WA 98040

project no: 53-19

8485 REGISTERED ARCHITECT GENG TAN STATE OF WASHINGTON

Issue/Revision:

NO.	ISSUED FOR	DATE

© 2015 ATLAS ARCHITECTS COMPANY
THESE DRAWINGS ARE THE PROPERTY OF ATLAS ARCHITECTS COMPANY AND ARE NOT TO BE REPRODUCED IN ANY MANNER, EXCEPT WITH THE PRIOR WRITTEN PERMISSION OF ATLAS.

Drawn By	Checked By	Date
TG/UW	TG	8/2017

Sheet Title
WINDOW & DOOR SCHEDULE & NOTES

Scale
1/4" = 1'-0"

Sheet Number
A2.5

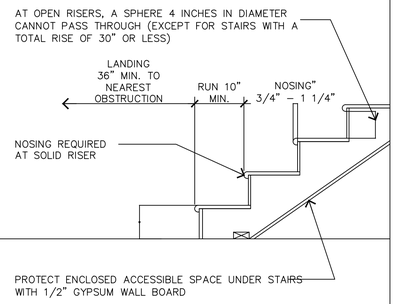

A TYPICAL STAIR SECTION

SCALE: 3/4"= 1'–0"

RJM136

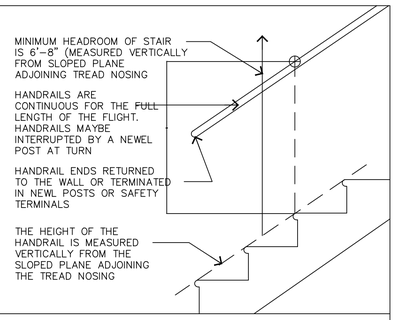

B HANDRAIL ELEVATION

SCALE: 3/4"= 1'–0"

RJM137

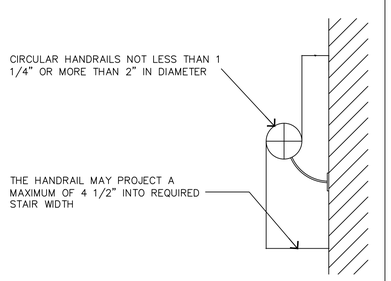

C HANDRAIL SECTION

SCALE: 3/4"= 1'–0"

RJM138

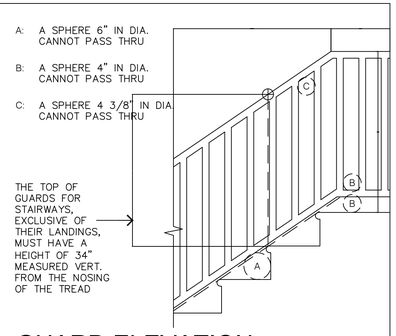

D GUARD ELEVATION

SCALE: 3/4"= 1'–0"

RJM139

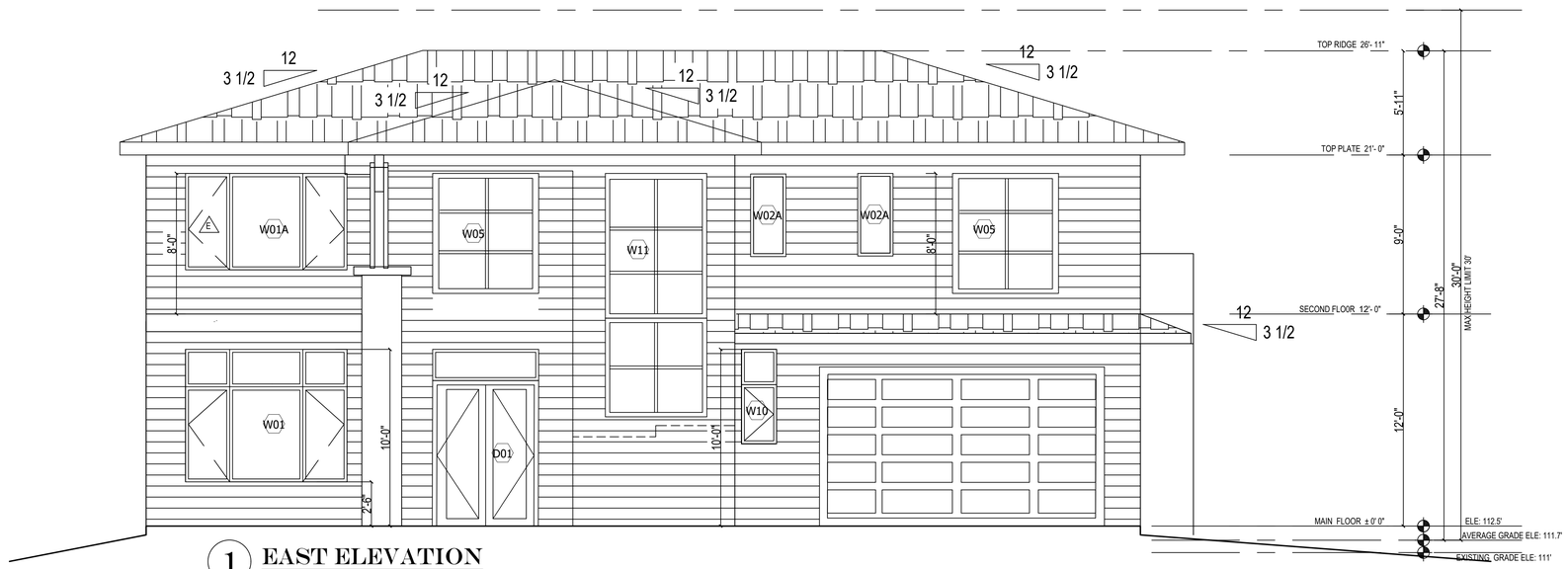

1 EAST ELEVATION

SCALE: 1/4" = 1'–0"

EXTERIOR FINISH SCHEDULE:

	MATERIAL	COLOR	NOTES
MAIN ROOFING MATERIAL	ASPHALT SHINGLE	1	PRODUCT & COLOR MATCH EXISTING DETERMINED BY OWNER
FLASHING			
MAIN SIDING MATERIAL	WOOD SIDING		
HIGHLIGHT SIDING MATERIAL	HARDI SIDING		
MASONRY			
CORNER BOARDS			
WINDOW & DOOR CASING	WOOD TRIM		
WINDOWS			

NOTES:

CONTRACTOR SHOULD VERIFY THE TRANSFER OF ALL POINT LOADS FROM THE ROOF DOWN THROUGH FRAMING MEMBERS AND INTO THE FOUNDATION.

NOTES:

ADHERED MASONRY VENEER: (IRC R703.12) SHALL BE INSTALLED IN ACCORDANCE WITH THE MANUFACTURE'S INSTRUCTION. ON EXTERIOR STUD WALLS, ADHERED MASONRY VENEER SHALL BE INSTALLED:

* MIN. OF 4" ABOVE THE EARTH.
* MIN. OF 2" ABOVE PAVED AREA. OR
* MIN OF $\frac{3}{4}$" ABOVE EXTERIOR WALKING SURFACES WHICH ARE SUPPORTED BY THE SAME FOUNDATION THAT SUPPORTS THE EXTERIOR WALL.

FLASHING AT THE FOUNDATION IS REQUIRED TO HAVE A MIN. VERTICAL ATTACHMENT FLANGE OF 3 $\frac{1}{2}$" AND SHALL EXTEND A MIN. OF 1" BELOW THE PLATE LINE.

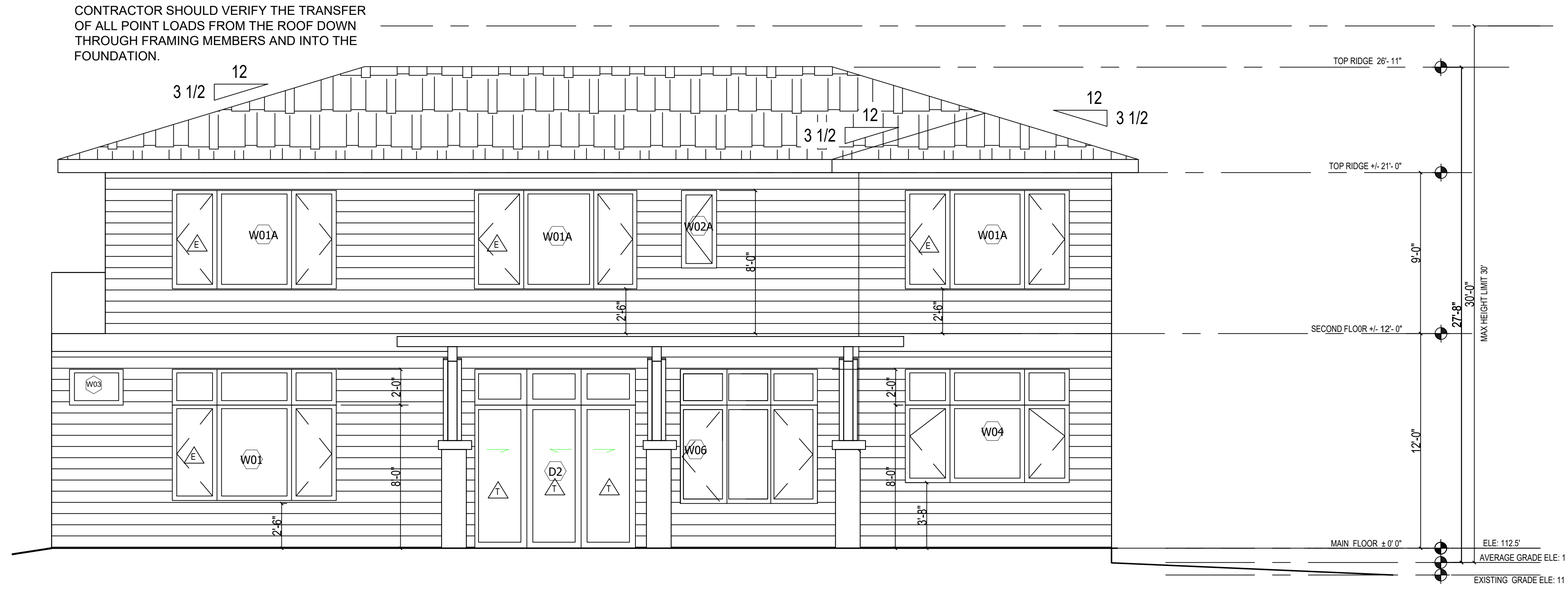

2 WEST ELEVATION

SCALE: 1/4" = 1'–0"

Atlas Associates International
5280 Highland Dr.
Bellevue, washington
98006
206.488.3688 v
gengtan@gmail.com
www.Atlascreate.com

Mercer New House

2423 63rd Ave SE
Mercer Island, WA 98040

project no: 53-19

8-485 REGISTERED ARCHITECT GENG TAN STATE OF WASHINGTON

Issue/Revision:

1 5-14-2020 City Permit Comments Revision

NO.	ISSUED FOR	DATE

© 2015 ATLAS ARCHITECTS COMPANY
THESE DRAWINGS ARE THE PROPERTY OF ATLAS ARCHITECTS COMPANY AND ARE NOT TO BE REPRODUCED IN ANY MANNER, EXCEPT WITH THE PRIOR WRITTEN PERMISSION OF ATLAS.

Drawn By	Checked By	Date
TG/UW	TG	8/2017

Sheet Title

EXTERIOR ELEVATIONS

Scale 1/4" = 1'-0"

Sheet Number

A3.1

Xref .\x-title-WANGJIAN HOUSE.dwg

EXTERIOR FINISH SCHEDULE:			
	MATERIAL	COLOR	NOTES
MAIN ROOFING MATERIAL	ASPHALT SHINGLE	1	PRODUCT & COLOR MATCH EXISTING DETERMINED BY OWNER
FLASHING			
MAIN SIDING MATERIAL	WOOD SIDING		
HIGHLIGHT SIDING MATERIAL	HARDI SIDING		
MASONRY			
CORNER BOARDS			
WINDOW & DOOR CASING	WOOD TRIM		
WINDOWS			

NOTES:

CONTRACTOR SHOULD VERIFY THE TRANSFER OF ALL POINT LOADS FROM THE ROOF DOWN THROUGH FRAMING MEMBERS AND INTO THE FOUNDATION.

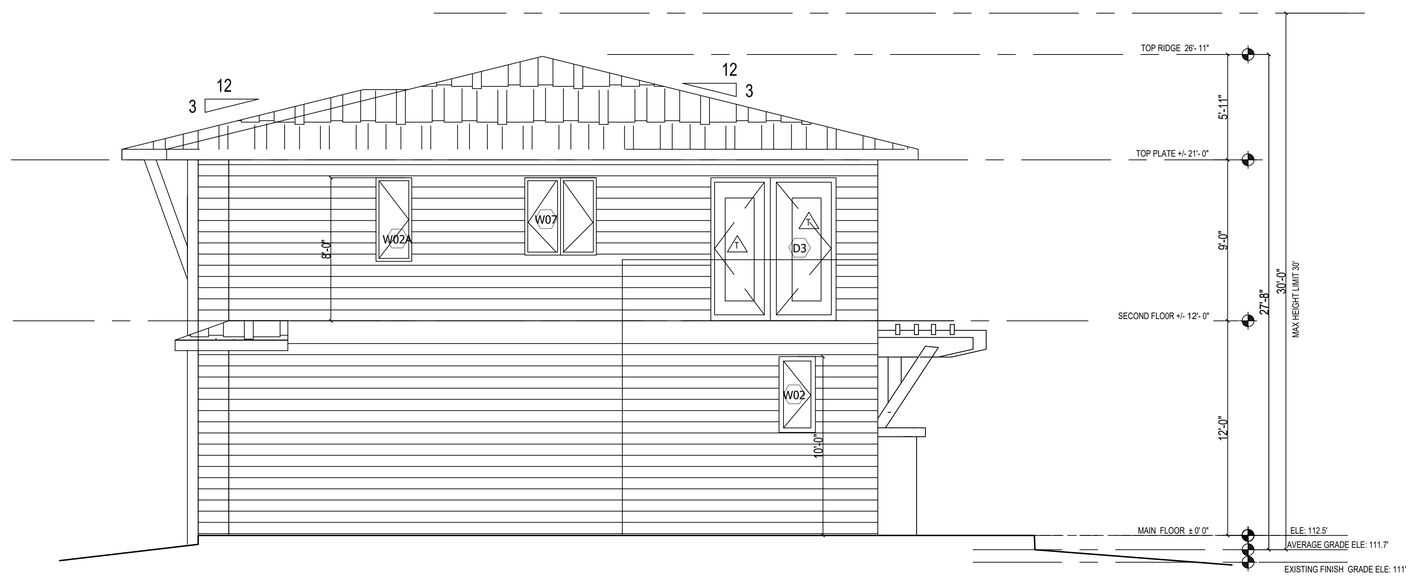

1 NORTT ELEVATION
SCALE: 1/4" = 1'-0"

AVERAGE EXISTING GRADE & HEIGHT CALCULATION

MIDPOINT ELEVATION	WALL SEGMENT LENGTH
A=111.3'	a=22'11"
B=111.1'	b=1'9"
C=111'	c=9'2"
D=110.9'	d=3'6"
E=110.8'	e=10'1"
F=110.7'	f=3'6"
G=110.6'	g=14'1"
H=110.3'	h=39'
I=110.5'	i=14'1"
J=110.6'	j=1'
K=111.3'	k=45'2"
L=111.7'	l=14'3"
M=111.6'	m=3'
N=111.5'	n=22'

AVERAGE BUILDING ELEVATION:
=(A*a+B*b+C*c+D*d+E*e+F*f+G*g+H*h+I*i+J*j+K*k+L*l+M*m+N*n)
a+b+c+d+e+f+g+h+i+j+k+l+m+n

=(111.3*22.917+111.1*1.75+111*9.17+110.9*3.5+110.8*10.083+110.7*3.5+110.6*14.083+110.3*39
+110.5*14.083+110.6*1+111.3*45.167+111.7*14.25+111.6*3+111.5*22)
202.503

=2550.66+194.425+1017.87+388.15+1117.2+387.45+1557.58+4301.7
+1556.17+110.6+5027+1591.725+334.8+2453
202.503

=22588.33 =111.5
202.503

AVERAGE BUILDING ELEVATION: =111.5'

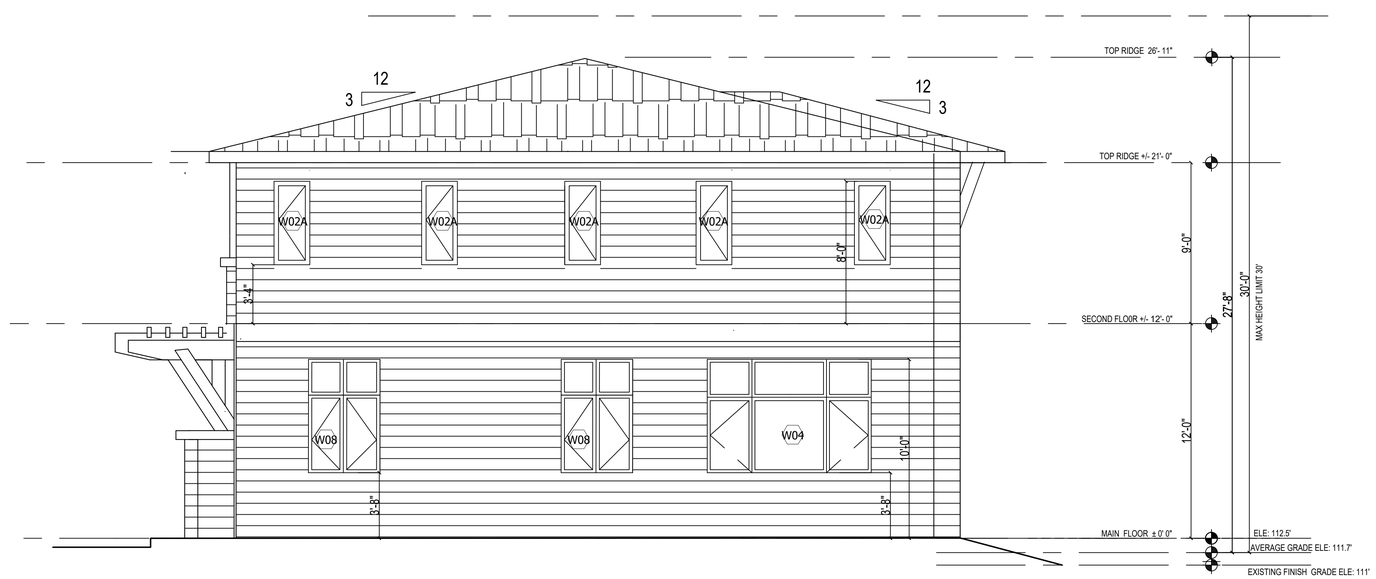

2 SOUTH ELEVATION
SCALE: 1/4" = 1'-0"

atlas architects
Atlas Associates International
5280 Highland Dr.
Bellevue, washington
98006
206.488.3688 v
gengtan@gmail.com
www.Atlascreate.com

Mercer New House

2423 63rd Ave SE
Mercer Island, WA 98040

project no: 53-19

8485 REGISTERED ARCHITECT GENG TAN STATE OF WASHINGTON

Issue/Revision:

1 5-14-2020 City Permit Comments Revision

NO.	ISSUED FOR	DATE

© 2015 ATLAS ARCHITECTS COMPANY
THESE DRAWINGS ARE THE PROPERTY OF ATLAS ARCHITECTS COMPANY AND ARE NOT TO BE REPRODUCED IN ANY MANNER, EXCEPT WITH THE PRIOR WRITTEN PERMISSION OF ATLAS.

Drawn By	Checked By	Date
TG/UW	TG	8/2017

Sheet Title
EXTERIOR ELEVATIONS

Scale 1/4" = 1'-0"

Sheet Number
A3.2

Xref .\x-title-WANGJIAN HOUSE.dwg

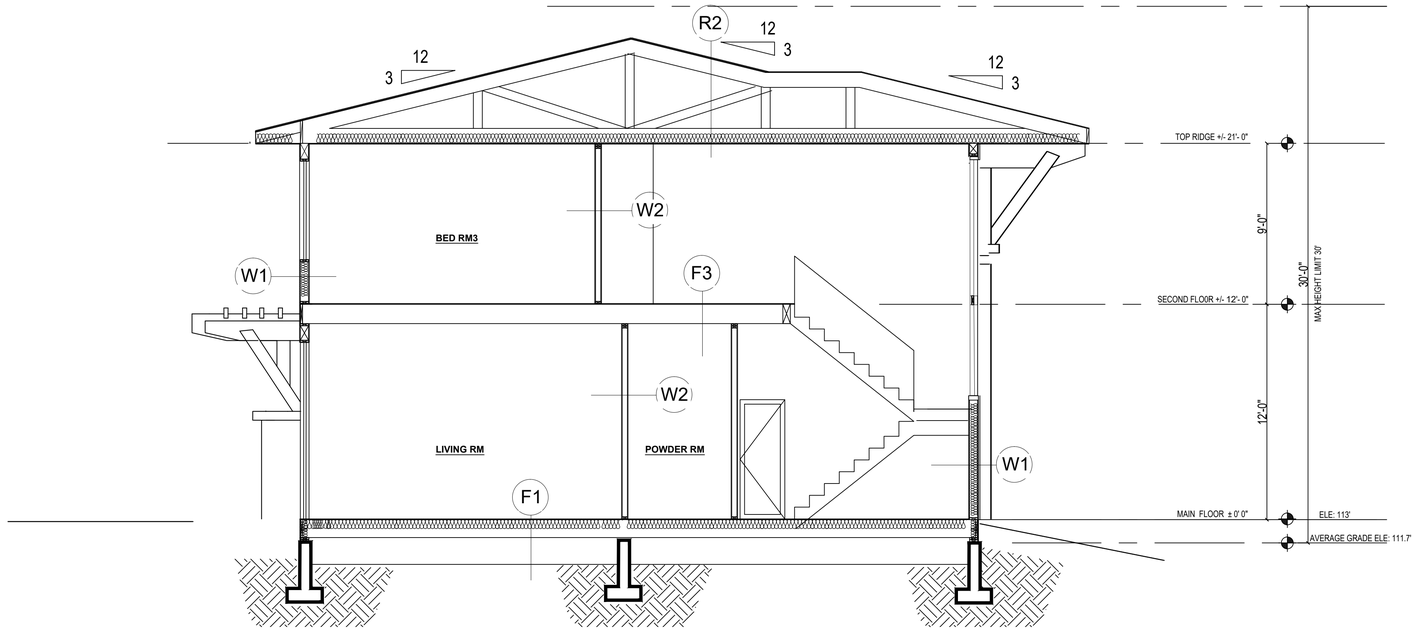

1 BUILDING SECTION

SCALE: 1/4" = 1'-0"

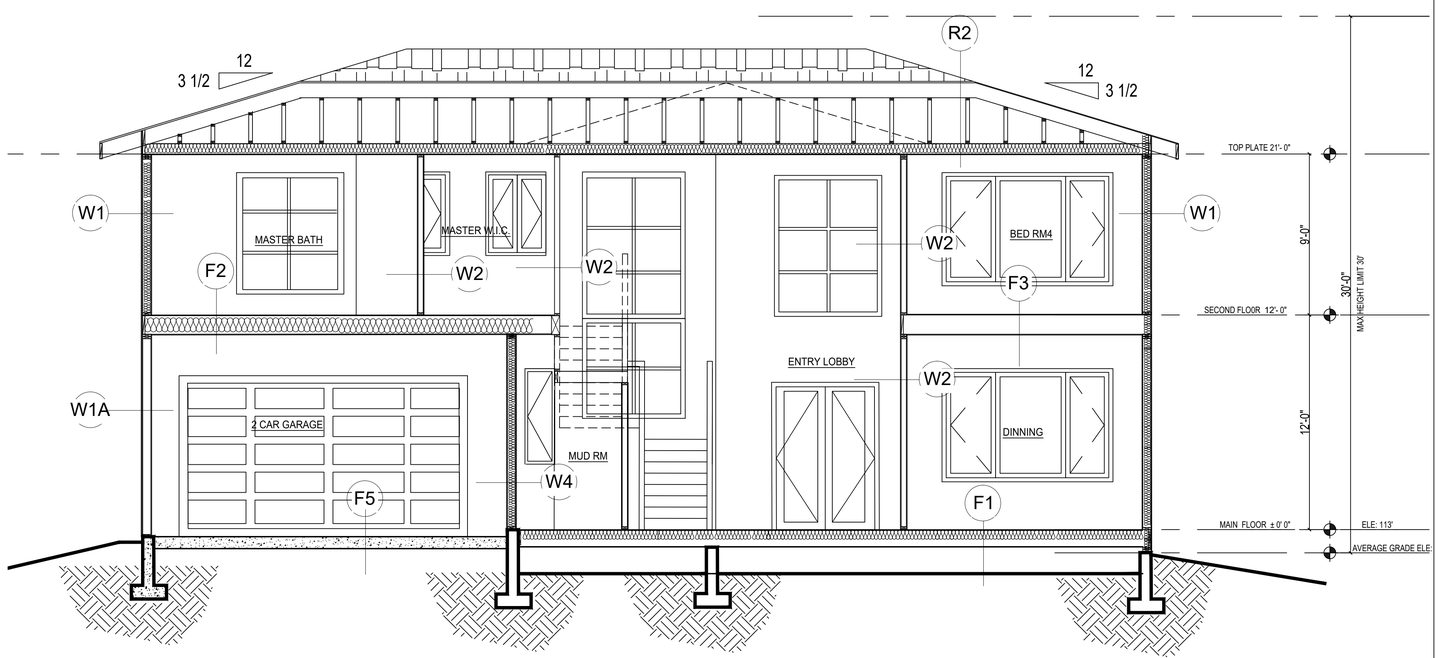

2 BUILDING SECTION

SCALE: 1/4" = 1'-0"

NOTES:

CONTRACTOR SHOULD VERIFY THE TRANSFER OF ALL POINT LOADS FROM THE ROOF DOWN THROUGH FRAMING MEMBERS AND INTO THE FOUNDATION.

ROOF ASSEMBLIES:

R1 FLAT ROOF

- TPO MEMBRANE
- TAPERED RIGID INSULATION (SLOPE PER PLANS)
- SHEATHING AND NAILING PER STRUCTURE
- VENT PER PLANS
- TJI'S PER PLAN
- BATT INSULATION (R-38)
- 5/8" GWB CEILING

R2 SLOPED ROOF

- 50-YEAR METAL/OR ASPHALT SHINGLE ROOFING
- O/30# FELT
- O/PLYWOOD SHEATHING AND NAILING PER STRUCTURE
- O/ROOF FRAMING PER STRUCTURE
- BATT INSULATION (R-49) W/VAPOR BARRIER
- ZXCEILING JOISTS OR TRUSSS BOTTOM CHORDS
- @24" O.C. (U.N.O)
- 5/8" GWB CEILING

FLOOR ASSEMBLIES:

F1 FLOOR OVER CRAWL SPACE

- FINISH FLOOR
- O/3/4" APA RATED T & G PLYWOOD SUB-FLOOR
- O/JOIST PER PLAN 16" O.C.
- W/R-30 FIBERGLASS BATT INSULATION HOLD TIGHT OT SUB-FLOOR
- W/O MOISTURE BARRIER

F2 1-HR RATED FLOOR OVER GARAGE

- FINISH FLOOR PER PLANS
- SHEATHING & NAILING PER STRUCT.
- FLOOR JOISTS PER STRUCT
- R-30 BATT INSULATION
- (2) LAYERS 5/8" GWB

F3 UPPER INTERIOR FLOOR

- FINISH FLOOR PER PLANS
- SHEATHING & NAILING PER STRUCT.
- FLOOR JOISTS PER STRUCT
- (1) LAYER OF GWB

F4 FLOOR OVER EXTERIOR DECK/ENTRY

- FINISH FLOOR PER PLANS
- SHEATHING & NAILING PER STRUCT.
- FLOOR JOISTS PER STRUCT
- R-30 BATT INSULATION
- SOFFIT FINISH PER OWNER

F5 SLAB ON GRADE

- CONC. SLAB PER STRUCT
- PROVIDE CONTROL JOINTS
- VAPOR BARRIER
- 2" REGID INSULATION
- GRAVEL FILL PER STRUCTURAL

WALL ASSEMBLIES:

W1 EXTERIOR WALL

- SIDING PER ELEVATION
- 1/2" PRESURE TREATED PLYWOOD RIPPED TO 3" STRIPS
- (1) LAYER MOISTURE BARRIER
- SHTG & NAILING PER STRUCT.
- 2X6 @ 16" O.C.
- R-21 BATT INSULATION
- 5/8" GWB

W1A EXTERIOR WALL@GARAGE

- SIDING PER ELEVATION
- 1/2" PRESURE TREATED PLYWOOD RIPPED TO 3" STRIPS
- (1) LAYER MOISTURE BARRIER
- SHTG & NAILING PER STRUCT.
- 2X6 @ 16" O.C.
- 5/8" GWB

W2 TYPICAL INTERIOR PARTITION

- 5/8" GWB
- 2X4 @ 16" O.C.
- 5/8" GWB

W4 GARAGE SEPERATION WALL

- 5/8" TYP. "X" GWB
- SHEATHING WHERE REQED PER STRUCTURE
- 2X6 @ 16" O.C.
- R-21 BATT INSULATION
- 5/8" GWB

W3 TYPICAL PLUMBING PARTITION

- 5/8" GWB
- 2X6 @ 16" O.C.
- 5/8" GWB

atlas architects

Atlas Associates International
5280 Highland Dr.
Bellevue, washington
98006
206.488.3688 v
gengtan@gmail.com
www.Atlascreate.com

Mercer New House

2423 63rd Ave SE
Mercer Island, WA 98040

project no: 53-19

8485 REGISTERED ARCHITECT
GENG TAN
STATE OF WASHINGTON

Issue/Revision:

NO.	ISSUED FOR	DATE

© 2015 ATLAS ARCHITECTS COMPANY
THESE DRAWINGS ARE THE PROPERTY OF ATLAS ARCHITECTS COMPANY AND ARE NOT TO BE REPRODUCED IN ANY MANNER, EXCEPT WITH THE PRIOR WRITTEN PERMISSION OF ATLAS.

Drawn By	Checked By	Date
TG/UW	TG	8/2017

Sheet Title

BUILDINGS SECTIONS

Scale 1/4" = 1'-0"

Sheet Number

A4.1

Xref .\x-title-WANGJIAN HOUSE.dwg

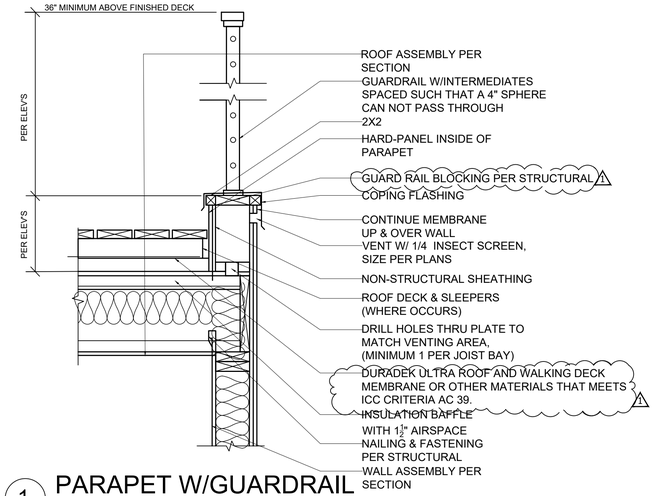

1 PARAPET W/GUARDRAIL
SCALE: 1"=1'0"

NOTES:
GUARDS ON THE OPEN SIDES OF STAIRS SHALL NOT HAVE OPENINGS WHICH ALLOW PASSAGE OF A 4 3/8" Ø SPHERE.

OPEN RISERS ARE PERMITTED, PROVIDING THAT THE OPENING BETWEEN TRENDS DOES NOT PERMIT THE PASSAGE OF A 4"Ø BALL

MINIMUM STAIR TREAD WIDTH OF A WINDER TO 6" AT THE NARROWEST POINT

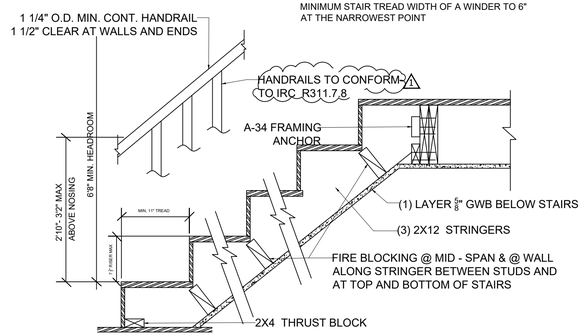

2 STAIR DETAIL
SCALE: 1"=1'0"

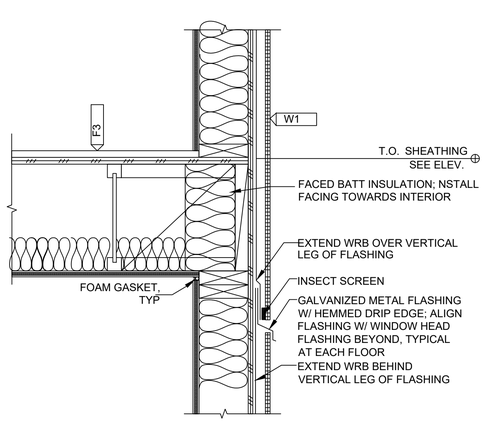

3 CONTINUOUS FLASHING
1-1/2"=1'-0"

NOTES:

CONTRACTOR SHOULD VERIFY THE TRANSFER OF ALL POINT LOADS FROM THE ROOF DOWN THROUGH FRAMING MEMBERS AND INTO THE FOUNDATION.

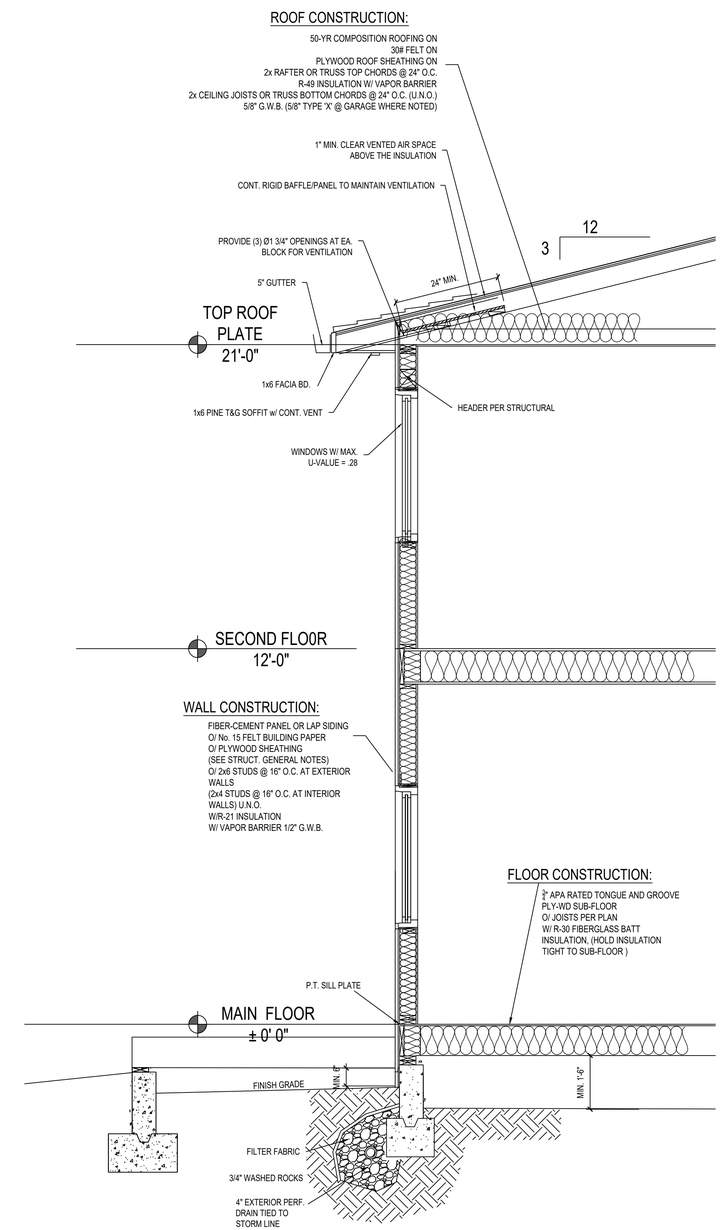

BUILDING SECTION
SCALE: 1/2" = 1'-0"

Atlas Associates International
5280 Highland Dr.
Bellevue, washington
98006
206.488.3688 v
gengtan@gmail.com
www.Atlascreate.com

Mercer New House

2423 63rd Ave SE
Mercer Island, WA 98040

project no: 53-19

Issue/Revision:

NO.	ISSUED FOR	DATE

© 2015 ATLAS ARCHITECTS COMPANY
THESE DRAWINGS ARE THE PROPERTY OF ATLAS ARCHITECTS COMPANY AND ARE NOT TO BE REPRODUCED IN ANY MANNER, EXCEPT WITH THE PRIOR WRITTEN PERMISSION OF ATLAS.

Drawn By	Checked By	Date
TG/UW	TG	8/2017

Sheet Title
WALL SECTIONS & DETAILS

Scale ANT

Sheet Number
A4.2

1 VENTILATION REQUIREMENTS

WHOLE HOUSE VENTILATION:

THE WHOLE HOUSE VENTILATION SYSTEM SHALL BE BIDDER DESIGNED TO PULL FRESH AIR FROM THE EXTERIOR INTO THE FURNACE RETURN AIR PLENUM, TO THEN BE DISTRIBUTED TO ALL HABITABLE ROOMS. A BALANCED QUANTITY OF AIR SHALL BE SIMULTANEOUSLY EVACUATED FROM THE INTERIOR TO EXTERIOR OF THE BUILDINGS.

SYSTEM CRITERIA: ALLOW FOR A MINIMUM OF .35 AND MAXIMUM OF .50 AIR CHANGES PER HOUR FOR ALL HABITABLE ROOMS. UTILIZE A HIGH EFFICIENCY FAN MAX 35W/CFM.

SYSTEM COMPONENTS TO INCLUDE EXTERIOR INTAKE GRILL, SMOOTH WALL AIR TIGHT INTAKE DUCTING, EXHAUST PORT WITH BACK-DRAFT DAMPER, RODENT PROOF ALL EXTERIOR HOOD.

WHOLE HOUSE EXHAUST DUCT SHALL:
-BE SIZED ACCORDING TO TABLE 3-2 OF THE UNIFORM MECHANICAL CODE.
-BE INSULATED TO A MIN. R-8
-TERMINATE OUTSIDE THE BUILDING.
-BE FLOW RATE @0.25" W.G. STATIC PRESSURE.
-BE SOUND RATE @1.5 SONES MAX.

WHOLE HOUSE EXHAUST FAN CONTROLS SHALL:
-BE CONNECTED TO THE FURNACE BLOWER FOR SYNCHRONIZED FUNCTION.
-BE CONTROLLED BY A 24-HOUR CLOCK TIMER FOR INTERMITTENT USE.
-PROCIDE CAPABILITY OF CONTINUOUS OPERATION, WITH MANUAL & AUTOMATIC CONTROL
-THE 24-HOUR CLOCK SHALL BE READILY ACCESSIBLE.
-AT THE TIME OF FINAL INSPECTION, THE AUTOMATIC CONTROL TIMER SHALL BE SET TO OPERATE THE WHOLE HOUSE FAN FOR AT LEAST 8 HOURS A DAY.

INTERIOR DOORS TO BE UNDERCUT A MIN. OF ½" ABOVE FINISHED FLOOR COVERINGS FOR FRESH AIR DISTRIBUTION.

SOURCE SPECIFIC VENTILATION:

SOURCE SPECIFIC EXHAUST VENTILATION IS REQUIRED IN EACH KITCHEN, BATHROOM, WATER CLOSET, LAUNDRY ROOM, SWIMMING POOL, SPA AND OTHER ROOMS WHERE EXCESS WATER VAPOR OR COOKING ORDER IS PRODUCED (SECTION 302.2.1 WASHINGTON STATE VENTILATION AND INDOOR AIR QUALITY CODE).

USE PANASONIC EXHAUST FANS FOR EACH BATHROOM, LAUNDRY & WET ROOM PER PLAN NOTES. ALL EXHAUST FAN TO HAVE TIMER SWITCHES. INSTALL PER MANUCATURER SPECIFICATIONS. 1

INSTALL EXHAUST FANS FOR BATHROOMS, LAUNDREIS & OTHER WET ROOMS AS FOLLOWS:
-VENT TO EXTERIOR WITH 4" DIAMETER SMOOTH WALL AND AIR TIGHT METAL DUCT
-INSULATE DUCT WITH R-8 IN UNCONDITIONED SPACES.
-TERMINATE IN HOOD WITH BACK DRAFT DAMPER.
-SEAL ALL DUCT PER IRC M1601.1. 1

RANGE HOODS & DOWN DRAFT RANGES SHALL BE TATED NOT LESS THAN 200 CFM@0.10"W.G; AND NOT MORE THAN 400 CFM. INSTALL PER MANUFACTURER SPECIFICATIONS.

RANGE HOOD DUCTS: RANGE HOOD SHALL DISCHARGE TO THE OUTDOORS THROUGH A SINGLE-WALL DUCT PER THE MANUFACTUREER'S SPECIFICATIONS. THE DUCT SERVING THE HOOD SHALL HAVE A SMOOTH INTERIOR SURFACE, SHALL BE AIRTIGHT AND SHALL BE EQUIPPED WITH A BACKDRAFT DAMPER. DUCTS SERVING RANGE HOOD SHALL NOT TERMINATE IN AN ATTIC OR CRAWL SPACE OR AREA INSIDE THE BUILDING(SECTION M1502.1) INSULATE IN UN-CONDITIONED SPACES TO R-8.

DRYER VENT:

DRYER DUCTS: DRYER EXHAUST SYSTEMS SHALL BE INDEPENDENT OF ALL OTHER SYSTEMS. SHALL CONVEY THE MOISTURE TO THE OUTDOORS AND SHALL TERMINATE ON THE OUTSIDE OF THE BUILDING.

EXHAUST DUCT TERMINATIONS SHALL BE IN ACCORDANCE WITH THE DRYER MANUFACTUREER'S INSTALLATION INSTRUCTIONS. SCREENS SHALL NOT BE INSTALLED AT THE DUCT TERMINATION.

EXHAUST DUCT SHALL NOT BE CONNECTED WITH SHEET METAL SCREWS OR FASTENING MEANS WHICH EXTEND INTO THE DUCT.

EXHAUST DUCTS SHALL BE EQUIPPED WITH A BACKDRAFT DAMPER.

THE MAXIMUM LENGTH OF A LOCTHES DRYER EXHUAST DUCT SHALL NOT EXCEED 25' FROM THE DRYER LOCATION TO THE WALL OT ROOF TERMINATION.

THE MAXIMUM LENGTH OF THE DUCT SHALL BE REDUCED 2.5 FEET FOR EACH 45-DEGREE BEND AND FIVE FEET FOR EACH 90-DEGREE BEMD .

THE MAXIMUM LENGTH OF THE EXHAUST DUCT DOES NOT INCLUDE THE TRANSITION DUCT PER DECTION M1501.3.

2 HVAC SYSTEM REQUIREMENTS

THE HVAC SYSTEM TO IS BE BIDDER DESIGNED.

UTILIZE A 95% EFFICIENT GAS FORCED AIR FURNACE, SIZE FURNACE PER WSEC M-1401.3 AND DESIGN AND SIZE DUCTWORK PER THE 2016IMC.

DESIGN FOR INTEGRATED WHOLE HOUSE VENTILATION PER WASHINGTON STATE VENTILATION CODE AND 1/A5.1. UTILIZE A HIGH EFFICIENCY FAN MAX 35W/CFM.

UTILIZE AN AIR SOURCE HEAT PUMP INTEGRATED WITH HVAC SYSTEM, WITH HSPF OF 9.0.

LOCATE EQUIPMENT PER PLAN; PROVIDE OUTSIDE COMBUSTION AIR FOR ALL GAS APPLIANCES PER 2016 IMC AND MFG SPECIFICATIONS.

PROVIDE AN ACCESSIBLE MEANS OF BALANCING THE AIR FLOWS IN THE HEATING SUSTEM.

GAS FURNACES SHALL BE ELEVATED SUCH THAT THE SOURCE OF IGNITION IS NOT LESS THAN 18 INCHES ABOVE THE FLOOR IN HAZARDOUS LOCATION AND PRIVATE GARAGE.

INSTALL BOLLARDS PER CODE TO PROTECT EQUIPMENT AND DUCTWORK FROM COLLISION IN GARAGES.

DON'T USE BUILDING CAVITIES TO SUBSTITUTE FOR DUCTWORK OR PLENUMS.

SEAL ALL JOINTS IN DUCTWORK WITH APPROVED SEALANT (NOT DUCT TAPE) PER WSEC 503.10.3.

AVOID INSTALLING DUCTWORK IN UN-CONDITIONED SPACE. IF UNAVOIDABLE, INSULATE ALL DUCTWORK IN CRAWL SPACES WITH MINIMUM R-30 INSULATION BETWEEN DUCTWORK AND CRAWL AREA OR GARAGE, SUPPORT AS NECESSARY WITH WIRE OR BY CONSTRUCTION OF A DRY WALLED SOFFIT.

AVOID INSTALLATION OF SUPPLY OR RETURN DUCT IN EXTERIOR WALLS. IF UNAVOIDABLE, WALLS MUST BE FURRED SO THAT THE REQUIRED R VALUE OF HOUSE INSULATION IS NOT COMPROMISED.

FURNACE AND OTHER HVAC EQUIPMENT SHALL BE LABELED BY A NATIONALLY RECOGNIZED TESTING LABORATORY SUCH AS "UL". LABLES SHALL BE AFFIXED TO EQUIPMENT FOR INSPECTION BY THE BUILDING OFFICIAL.

THERMOSTAT SHALL BE PROGRAMMABLE TYPE.

PROVIDE AIR LEAKAGE TESTING OF DUCTWORK AND CERTIFIED WITH AFFIDAVIT PER 2015 WSEC, SEE BELOW FOR DUCTWORK LEAKAGE TESTING REQUIREMENTS.

INTERIOR DOORS TO BE UNDERCUT A MIN. OF ½" ABOVE FINISHED FLOOR COVERING FOR CONDITIONED AIR DISTRIBUTION AND RETURN.

3 PLUMBING NOTES

PLUMBING SUPPLY LINES TO BE PEX OR EQUIVALENT. USE JOINTS AND FITTINGS MADE BY SAME MANUFACTURER AS PIPE, MAKE CONNECTIONS PER MANUFACTURERS SPECIFICATIONS.

PLUMBING DRAIN LINES AND VENTS TO BE SCHEDULE 40 ABS PLASTIC.

PROVIDE WHOLE BUILDING SHUT OFF VALVE INSIDE BASEMENT IN AN EASILY ACCESSIBLE LOCATION WHICH WILL NOT BE COVERED BY CABINETS OR APPLIANCES.

WRAP UPPER FLOOR DRAIN LINES IN A SOUND DEADENING COVERING IN BOTH CEILING AND WALLS OF THE FLOOR BELOW. WITH FOAM PIPE WRAP, FIBERGLASS BATT INSULATION IS NOT SUFFICIENT BY ITSELF.

INSULATE ALL WATER SUPPLY LINES IN UN-CONDITIONED SPACES TO R-3

PROVIDE AN EXPANSION RELIEF TANK PER UPC SECTION 608.3.

INSTALL GAS FIRED HOT WATER TANK, 60 GALLON QUICK RECOVERY TYPE; WITH 80 % PERFORMANCE EFFICIENCY PER WSEC
C404.2

- MAINTAIN CLEARANCE TO COMBUSTIBLES PER MANUFACTURER SPECIFICATIONS

- PROVIDE OUTSIDE COMBUSTION AIR TO WATER HEATER PER 2015 IMC 1

- VENT TO EXTERIOR WITH MANUFACTURER SPECIFIED CHIMNEY, MAINTAIN CLEARANCE TO COMBUSTIBLES AS SPECIFIED BY MANUFACTURER, TERMINATE ON ROOF WITH MANUFACTURER SPECIFIED HOOD, FIRE BLOCK WITH MIN 24 GA GALV SHEET METAL.

- PROVIDE TEMPERATURE AND PRESSURE RELIEF VALVE TO EXTERIOR OF BUILDING

- 18" MINIMUM REQUIRED BETWEEN BOTTOM EDGE OF SOURCE OF IGNITION AND THE FLOOR. 1

-SEISMIC STRAPS ARE REQUIRED PER 2015 UPC 507.2. SECURELY FASTEN WATER HEATER TO WALL-UTILIZE BLOCKING AS REQUIRED. DRYWALL ANCHORES SHALL NOT BE USED.

-PROVIDE A VACCUM RELIEF VALVE IN THE COLD WATER LINE ABOVE THE HIGHEST LEVEL OF THE WATER HEATER.

-INSULATE ALL HOT WATER PIPES TO R-3 IN BOTH HEATED AND UN-HEATED AREAS.

ALL SHOWERHEAD AND KITCH SINK FAUCETS INSTALLED IN THE HOUSE SHALL BE RATED AT 1.75 GPM OR LESS. ALL OTHER LAVAORY FAUCETS SHALL BE RATED AT 1.0 GPM OR LESS. TO QULIFY TO CLAIM THIS CREDIT, THE BUILDING PERMIT DRAWING SHALL SPECIFY THE OPTION BEING SELECTED AND SHALL SPECIFY THE MAXIMUM FLOW RATED FOR ALL SHOWERHEADS, KITCHEN SINK FAUCETS, AND OTHER LAVATORY FAUCETS.

4 ELECTRICAL REQUIREMENTS

SERVICE PANEL

INSTALL A 200AMP SERVICE PANEL, SQUARE D OR EQUIVALENT. PROVIDE FOR UNDERGROUND SERVICE FROM UTILITY CONNECTION.

ALL CIRCUITRY, LOAD PANEL, SERVICE, AND WIRING TO BE DESIGNED AND INSTALLED BY LICENSED AND BONDED ELECTRICAL CONTRACTOR OR COMPLY WITH ALL APPLICABLE CODES, AND TO BE INSPECTED AS REQUIRED BY THIS JURISDICTION.

IT IS THE RESPONSIBILITY OF THE CONTRACTOR TO SIZE ALL CIRCUS APPROPRIATED TO AND CONFORMING TO CODE FOR THEIR ANTICIPATED LOAD.

WITING NOTES

LAYOUT FIXTURES IN KEEPING WITH THE REFLECTED CEILING PLAN OR PER THE PROPERTY OWNER, BUT ADJUST LOCATIONS TO AVOID UNNECESSARY CUTTING OF FRAMING MEMBERS.

DO NO DRILL WITHIN 2" OF THE BOTTOM OF ANY JOIST OR RAFTER. MAX HOLD SIZE 1" IN LOAD BEARING WALLS. CONSULT WITH STRUCTURE ENGINEER IF LARGER HOLES MUST BE DRILLED IN LOAD BEARING WALLS.

AT CORNERS AND OTHER AWKWARD FRAMING LOCATIONS ANY HOLE DRILL WITHIN 1" OF SHEATHING OR DRYWALL SHALL BE COVERED WITH METAL PLATES PER CODE.

FOR ANY WIRING IN CONCRETE FLOOR OR EXTERIOR CONCRETE SLABS-RUN WIRING IN APPROPRIATE CONDUIT BELOW THE BOTTOM OF THE SLAB. DO NOT POUR SLAB AROUND HORIZONTAL CONDUIT.

TYPICAL HEIGHTS

TYPICAL OUTLET	CENTER BOX 16" OFF FLOOR
TYPICAL SWITCH	CENTER BOX 48" OFF FLOOR
TYPICAL WALL MOUNTED LIGHT	CENTER BOX 66" OFF FLOOR OR AS CALLED OUT

ENERGY EFFICIENTCY

PER WSEC R 404.1, A MINIMUM OF 75% OF THE LAMPS IN PERMANENTLY INSTALLED LIGHTING FIXTURES SHALL BE HIGH-EFFICIENCY LAMPS.

RECESSED CEILING FIXTURE

ALL RECESSED FIXTURE TO BE UL APPROVED IC PROTECTED "ZERO CLEARANCE" TYPES AND TO BE SEALED UNITS THAT DO NOT LEAK AIR. ALL RECESS FIXTURES TO UTILIZE LED OR COMPACT FLORESCENT BULBS, MAX 17W EACH.

RECESSED FIXTURES AND EXHAUST FANS IN UNHEATED ATTICS OR RAFTER BAYS TO RECEIVE SPECIAL CLEARANCE CONSIDERATION SO THAT THE FULL R- VALUE OF THE SPECIFIED INSULATION IS MAINTAINED, EITHER BY MUDDING OR BY USE OF FOAM OR OTHER DENSE INSULATION.

DO NOT USE RECESS LIGHT FIXTURE IN A CLOSET.

RECESS LIGHT SHALL HAVE A WATER PROOF LENS IF USED IN A SHOWER OR OVER A BATH TUB. THE OWNER CAN EXPECT TO GET LESS LIGHT FROM THESE FIXTURES THAN FROM BARE BULB RECESSED LIGHTING.

ALL EXHAUST FANS TO HAVE TIMER SWITCHING.

NIGHT LIGHTS

FOR ALL NEW OR REMODELED BATHROOMS AND HALLWAYS LEADING FROM BEDROOMS TO A BATHROOM INSTALL NIGHT LIGHTS AT THE FLOOR LEVEL. WITH DIMMER SWITCHING OR SHADES TO KEEP THE LIGHT LOW.

BATHROOM AND HALLWAY NIGHT LIGHTS TO BE CONTROLLED BY MOTION SENSORS TIMED WITH A 10 MINUTE DELAY. INSTALL MOTION SENSORS AND NIGHT LIGHTS IN THE TOE KICK OF BATHROOMS CABINETS IF POSSIBLE. BUT LIGHT THE WAY TO TOILET. MOTION SENSORS TO BE PLACED SO PETS DO NOT TRIP THE SWITCHES.

LOW VOLTAGE WIRING & LIGHTING

ALL LOW VOLTAGE WIRING SHALL BE PERMITTED AND INSTALLED BY A LICENSED ELECTRICIAN.

HIDE ANY STAND ALONE TRANSFORMERS. BUT BE CERTAIN TO FOLLOW THE TRANSFORMER MANUFACTURERS INSTALLATION INSTRUCTIONS AND AVOID HEAR BUILD UP.

5 FIREPLACE NOTES

ALL NEW FIREPLACES SPECIFIED IN THESE PLANS TO BE ZERO CLEARANCE-DIRECT VENT GAS UNITS. ALL SUCH FIREPLACES WILL BE UL LISTED IN ACCORDANCE WITH UL127. ALL UNITS TO INCORPERATE THE FOLLOWING FEATURES:
A) SEALED GLASS ENCLOSURE
B) OUTSIDE COMBUSTION AIR
C) DOUBLE WALL COMBINATION VENT AND AIR INTAKE.

FRAME FOR AND INSTALL FIREPLACES PER THE MANUFACTURE'S SPECIFICATIONS, INSTALL CHIMNEY/AIR INTAKE PER THE MANUFACTURE'S SPECIFICATIONS INCLUDING FIRE-STOPS IF VENTS ARE ROUTED THROUGH FLOORS OR CEILINGS. USE FACTORY VENT HOOD ONLY. DO NOT SHROUD HOOD AND MAINTAIN CLEARANCES FROM HOOD PER MANUCATURE'S SPEC.

HEARTHS, MANTLES, AND SURROUNDS TO BE CONSTRUCTED FOR EACH FIREPLACE IN ACCORDANCE WITH THE MANUFACTURE'S SPECIFICATIONS.

WHEN TELEVISION SCREENS ARE INSTALLED ABOVE FIREPLACE:

A) THE BOTTOM OF THE TV SCREEN SHALL BE A MINIMUM OF 24" ABOVE THE TOP OF THE FIREBOX.

B) WIRING INCLUDING LOW VOLTAGE WIRING WILL BE SECURELY FASTENED INSIDE WALLS PER CODE-NO LOOPS OF WIRE ARE TO BE LEFT INSIDE THE WALL. USE "CLOCK" TYPE OUTLETS OR OTHER MEANS TO HIDE WIRES BEHIND TV.

atlas architects

Atlas Associates International
5280 Highland Dr.
Bellevue, washington
98006
206.488.3688 v
gengtan*gmail.com
www.Atlascreate.com

Mercer New House

2423 63rd Ave SE
Mercer Island, WA 98040

project no: 53-19

8-485 REGISTERED ARCHITECT GENG TAN STATE OF WASHINGTON

Issue/Revision:

1 5-14-2020 City Permit Comments Revision

NO.	ISSUED FOR	DATE

© 2015 ATLAS ARCHITECTS COMPANY
THESE DRAWINGS ARE THE PROPERTY OF ATLAS ARCHITECTS COMPANY AND ARE NOT TO BE REPRODUCED IN ANY MANNER, EXCEPT WITH THE PRIOR WRITTEN PERMISSION OF ATLAS.

Drawn By	Checked By	Date
TG/UW	TG	8/2017

Sheet Title
Mech/Ventilation/ Energy

Scale ANT

Sheet Number

A 6.1

CRITERIA

1. ALL MATERIALS, WORKMANSHIP, DESIGN, AND CONSTRUCTION SHALL CONFORM TO THE DRAWINGS, SPECIFICATIONS, AND THE 2015 INTERNATIONAL BUILDING CODE AS AMENDED BY LOCAL JURISDICTION.

   DESIGN LOAD CRITERIA
   GROUND SNOW LOAD . . . . . p_g=25 PSF
   FLAT ROOF SNOW LOAD . . . . . p_f=20 PSF
   FLOOR LIVE LOAD (RESIDENTIAL GARAGE) . . . . . 40 PSF
   WIND . . . . . GC_{pi}=0.18, 110 MPH, EXPOSURE "C"

   EARTHQUAKE . . . ANALYSIS PROCEDURE: EQUIVALENT LATERAL FORCE PROCEDURE
   LATERAL SYSTEM: LIGHT FRAMED SHEAR WALLS, Vs =12.09 KIPS (ULTIMATE)
   SITE CLASS=D, S_s=1.376g, S_{DS}=0.917g, S_1=0.53g, S_{D1}=0.53g, C_s=0.14, SDC D, I_e=1.0, R=6.5

   SEE PLANS FOR ADDITIONAL LOADING CRITERIA.

2. STRUCTURAL DRAWINGS SHALL BE USED IN CONJUNCTION WITH ARCHITECTURAL DRAWINGS FOR BIDDING AND CONSTRUCTION. CONTRACTOR SHALL VERIFY DIMENSIONS AND CONDITIONS FOR COMPATIBILITY AND SHALL NOTIFY ARCHITECT OF ANY DISCREPANCIES PRIOR TO CONSTRUCTION.

3. CONTRACTOR SHALL VERIFY ALL EXISTING DIMENSIONS, MEMBER SIZES, AND CONDITIONS PRIOR TO COMMENCING ANY WORK. ALL DIMENSIONS OF EXISTING CONSTRUCTION SHOWN ON THE DRAWINGS ARE INTENDED AS GUIDELINES ONLY AND MUSTBE VERIFIED.

4. CONTRACTOR SHALL PROVIDE TEMPORARY BRACING FOR THE STRUCTURE AND STRUCTURAL COMPONENTS UNTIL ALL FINAL CONNECTIONS HAVE BEEN COMPLETED IN ACCORDANCE WITH THE PLANS.

5. THE CONTRACTOR IS RESPONSIBLE FOR MAINTAINING SAFE EXCAVATION SLOPES AND ALL TEMPORARY EXCAVATIONS SHOULD BE PERFORMED IN ACCORDANCE WITH PART N OF WAC 296-155.

6. CONTRACTOR SHALL BE RESPONSIBLE FOR ALL SAFETY PRECAUTIONS AND THE METHODS, TECHNIQUES, SEQUENCES OR PROCEDURES REQUIRED TO PERFORM THE CONTRACTORS WORK. THE STRUCTURAL ENGINEER HAS NO OVERALL SUPERVISORY AUTHORITY OR ACTUAL AND/OR DIRECT RESPONSIBILITY FOR THE SPECIFIC WORKING CONDITIONS AT THE SITE AND/OR FOR ANY HAZARDS RESULTING FROM THE ACTIONS OF ANY TRADE CONTRACTOR. THE STRUCTURAL ENGINEER HAS NO DUTY TO INSPECT, SUPERVISE, NOTE, CORRECT, OR REPORT ANY HEALTH OR SAFETY DEFICIENCIES TO THE OWNER, CONTRACTORS, OR OTHER ENTITIES OR PERSONS AT THE PROJECT SITE.

7. CONTRACTOR-INITIATED CHANGES SHALL BE SUBMITTED IN WRITING TO THE ARCHITECT AND THE STRUCTURAL ENGINEER FOR APPROVAL PRIOR TO FABRICATION OR CONSTRUCTION. CHANGES SHOWN ON SHOP DRAWINGS ONLY WILL NOT SATISFY THIS REQUIREMENT.

8. DRAWINGS INDICATE GENERAL AND TYPICAL DETAILS OF CONSTRUCTION. WHERE CONDITIONS ARE NOT SPECIFICALLY INDICATED BUT ARE OF SIMILAR CHARACTER TO DETAILS SHOWN, SIMILAR DETAILS OF CONSTRUCTION SHALL BE USED, SUBJECT TO REVIEW AND APPROVAL BY THE ARCHITECT AND THE ENGINEER.

9. ALL STRUCTURAL SYSTEMS WHICH ARE TO BE COMPOSED OF COMPONENTS TO BE FIELD ERECTED SHALL BE SUPERVISED BY THE SUPPLIER DURING MANUFACTURING, DELIVERY, HANDLING, STORAGE AND ERECTION IN ACCORDANCE WITH INSTRUCTIONS PREPARED BY THE SUPPLIER.

10. SHOP DRAWINGS FOR THE FOLLOWING ITEMS SHALL BE SUBMITTED TO THE ARCHITECT AND STRUCTURAL ENGINEER FOR REVIEW PRIOR TO FABRICATION OF THESE ITEMS.

    CONNECTOR PLATE WOOD ROOF TRUSSES
    MANUFACTURED LUMBER (PSL'S, LSL'S, LVL'S)

11. CONTRACTOR SHALL SUBMIT WALL ELEVATION DRAWINGS OF AT LEAST 1/8" = 1'-0" SCALE INDICATING LOCATIONS OF CONNECTION EMBEDMENTS AND WALL OPENINGS FOR REVIEW PRIOR TO CONSTRUCTION. CONTRACTOR SHALL COORDINATE WITH REINFORCEMENT SHOP DRAWINGS. APPROVED SETS OF ALL SHOP DRAWINGS SHALL ALSO BE SUBMITTED TO THE BUILDING DEPARTMENT.

12. SHOP DRAWING REVIEW: DIMENSIONS AND QUANTITIES ARE NOT REVIEWED BY THE ENGINEER OF RECORD, THEREFORE MUST BE VERIFIED BY THE CONTRACTOR. CONTRACTOR SHALL REVIEW AND STAMP DRAWINGS PRIOR TO REVIEW BY ENGINEER OF RECORD. CONTRACTOR SHALL REVIEW DRAWINGS FOR CONFORMANCE WITH THE MEANS, METHODS, TECHNIQUES, SEQUENCES AND OPERATIONS OF CONSTRUCTION, AND ALL SAFETY PRECAUTIONS AND PROGRAMS INCIDENTAL THERETO. SUBMITTALS SHALL INCLUDE A REPRODUCIBLE AND ONE COPY; REPRODUCIBLE WILL BE MARKED AND RETURNED WITHIN TWO WEEKS OF RECEIPT WITH A NOTATION INDICATING THAT THE SUBMITTAL HAS BEEN FOUND TO BE IN GENERAL CONFORMANCE WITH THE DESIGN OF THE BUILDING. THE SUBMITTED ITEMS SHALL NOT BE INSTALLED UNTIL THEY HAVE BEEN APPROVED BY THE BUILDING OFFICIAL.

13. SHOP DRAWING SUBMITTALS PROCESSED BY THE ENGINEER ARE NOT CHANGE ORDERS. THE PURPOSE OF SHOP DRAWING SUBMITTALS BY THE CONTRACTOR IS TO DEMONSTRATE TO THE ENGINEER THAT THE CONTRACTOR UNDERSTANDS THE DESIGN CONCEPT, BY INDICATING WHICH MATERIAL IS INTENDED TO BE FURNISHED AND INSTALLED AND BY DETAILING THE INTENDED FABRICATION AND INSTALLATION METHODS. IF DEVIATIONS, DISCREPANCIES, OR CONFLICTS BETWEEN SHOP DRAWING SUBMITTALS AND THE CONTRACT DOCUMENTS ARE DISCOVERED EITHER PRIOR TO OR AFTER SHOP DRAWING SUBMITTALS ARE PROCESSED BY THE ENGINEER, THE DESIGN DRAWINGS AND SPECIFICATIONS SHALL CONTROL AND SHALL BE FOLLOWED.

FOUNDATION NOTES:

14. ALLOWABLE SOIL PRESSURE AND LATERAL EARTH PRESSURE ARE ASSUMED AND THEREFORE MUST BE VERIFIED BY A QUALIFIED SOILS ENGINEER OR APPROVED BY THE BUILDING OFFICIAL. IF SOILS ARE FOUND TO BE OTHER THAN ASSUMED, NOTIFY THE STRUCTURAL ENGINEER FOR POSSIBLE FOUNDATION REDESIGN.

15. FOOTINGS SHALL BEAR ON FIRM, UNDISTURBED EARTH OR ON PROPERLY COMPACTED STRUCTURALFILL. AT LEAST 18" BELOW ADJACENT FINISHED GRADE. UNLESS OTHERWISE NOTED, FOOTINGS SHALL BE CENTERED BELOW COLUMNS OR WALLS ABOVE.

    IF SOILS AT THE FOOTING GRADE ARE OBSERVED TO BE LOOSE OR SOFT, THE LOOSE/SOFT SOIL SHOULD BE OVER-EXCAVATED BELOW THE FOOTING TO THE COMPETENT BEARING SURFACE, ESTIMATED AT 2 ½ TO 5 FEET BELOW THE EXISTING GRADE UNDER THE THE PROPOSED STRUCTURE, OR COMPACTED IN PLACE TO DENSE CONDITIONS. THE OVER-EXCAVATION SHOULD EXTEND ONE FOOT HORIZONTALLY FROM EACH SIDE OF THE PROPOSED FOOTINGS, AND SHOULD BE BACKFILLED WITH PROPERLY COMPACTED GRANULAR STRUCTURAL FILL. UNLESS OTHERWISE NOTED, FOOTINGS SHALL BE CENTERED BELOW COLUMNS OR WALLS ABOVE.

    ALLOWABLE SOIL PRESSURE. . . . . .2,000 PSF

16. WHERE NEW REINFORCING TERMINATES AT EXISTING CONCRETE, DOWELS EPOXY GROUTED INTO EXISTING CONCRETE SHALL BE PROVIDED TO MATCH HORIZONTAL REINFORCING, UNLESS OTHERWISE NOTED ON PLANS.

17. PERIMETER 4-INCH DIAMETER SCHEDULE 40 PVC PERFORATED PIPE EMBEDDED IN PEA GRAVEL AND WRAPPED IN FILTER FABRIC SHALL BE INSTALLED AT THE BASE OF THE PERIMETER FOOTING TO DIRECT COLLECTED WATER TO AN APPROPRIATE OUTLET.

    UNDER NO CIRCUMSTANCES SHOULD ROOF DOWNSPOUT DRAIN LINES BE CONNECTED TO THE FOOTING DRAIN SYSTEM. ROOF DOWNSPOUTS MUST BE SEPARATELY CONNECTED TO AN APPROPRIATE DISCHARGE. CLEANOUTS SHOULD BE INSTALLED TO ALLOW FOR PERIODIC MAINTENANCE OF THE FOOTING DRAIN AND DOWNSPOUT TIGHTLINE SYSTEM.

18. FOUNDATION SUBSTRATE SHALL BE, AT A MINIMUM, UNDISTURBED NATIVE FIRM SOIL.

    GC SHALL PLACE AND COMPACT BACKFILL MATERIALS IN CONTINUOUS LAYERS NOT EXCEEDING 6-INCH LOOSE LIFT THICKNESS. ANY LOOSEN/SOFT FOUNDATION SUBSTRATE SHALL BE COMPACTED TO A MINIMUM OF 95% OF THE MAXIMUM DRY DENSITY (ASTIM D698, STANDARD PROCTOR).

CONCRETE

19. CONCRETE SHALL BE MIXED, PROPORTIONED, CONVEYED AND PLACED IN ACCORDANCE WITH IBC SECTION 1905, 1906 AND ACI 301, INCLUDING TESTING PROCEDURES. CONCRETE SHALL ATTAIN A 28-DAY STRENGTH OF f'c = 2,500 PSI AND MIX SHALL CONTAIN NOT LESS THAN 5-1/2 SACKS OF CEMENT PER CUBIC YARD AND SHALL BE PROPORTIONED TO PRODUCE A SLUMP OF 5" OR LESS. ALL CONCRETE WITH SURFACES EXPOSED TO WEATHER OR STANDING WATER SHALL BE AIR-ENTRAINED WITH AN AIR-ENTRAINING AGENT CONFORMING TO ASTM C260, C494,AND C618. TOTAL AIR CONTENT FOR FROST-RESISTANT CONCRETE SHALL BE IN ACCORDANCE WITH TABLE ACI 318 TABLE 4.2.1 MODERATE EXPOSURE.

20. REINFORCING STEEL SHALL CONFORM TO ASTM A615 (INCLUDING SUPPLEMENT S1), GRADE 60, fy = 60,000 PSI. DETAILING OF REINFORCING STEEL (INCLUDING HOOKS AND BENDS) SHALL BE IN ACCORDANCE WITH ACI 315-99 AND 318-14. LAP ALL CONTINUOUS REINFORCEMENT #5 AND SMALLER 40 BAR DIAMETERS OR 2'-0" MINIMUM. PROVIDE CORNER BARS AT ALL WALL AND FOOTING INTERSECTIONS. LAP CORNER BARS #5 AND SMALLER 40 BAR DIAMETERS OR 2'-0" MINIMUM.

21. CONCRETE PROTECTION (COVER) FOR REINFORCING STEEL SHALL BE AS FOLLOWS:
    FOOTINGS AND OTHER UNFORMED SURFACES CAST AGAINST
    AND PERMANENTLY EXPOSED TO EARTH . . . . . 3"
    FORMED SURFACES EXPOSED TO EARTH OR WEATHER (#5 BARS OR SMALLER) . . . . . .1-1/2"
    SLABS AND WALLS (INT. FACE). . . . . GREATER OF BAR DIAMETER PLUS 1/8" OR 3/4"

WOOD

22. FRAMING LUMBER SHALL BE KILN DRIED OR MC-19, AND GRADED AND MARKED INCONFORMANCE WITH W.C.L.B. STANDARD GRADING RULES FOR WEST COAST LUMBER NO. 17. FURNISH TO THE FOLLOWING MINIMUM STANDARDS:

JOISTS AND BEAMS	(2X & 3X MEMBERS)	HEM-FIR NO. 2 MINIMUM BASE VALUE, Fb = 850 PSI
	(4X MEMBERS)	DOUGLAS FIR-LARCH NO. 1 MINIMUM BASE VALUE, Fb = 1000 PSI
	(6X MEMBERS)	DOUGLAS FIR-LARCH NO. 1 MINIMUM BASE VALUE, Fb = 1350 PSI
POSTS:	(4X MEMBERS)	DOUGLAS FIR-LARCH NO. 2 MINIMUM BASE VALUE, Fc = 1350 PSI

STUDS, PLATES & MISC. FRAMING: DOUGLAS-FIR-LARCH OR HEM-FIR NO. 2

ALL WOOD IN DIRECT CONTACT WITH CONCRETE SHALL BE PRESSURE-TREATED WITH AN APPROVED PRESERVATIVE OR (2) LAYERS OF ASPHALT IMPREGNATED BUILDING PAPER SHALL BE PROVIDED BETWEEN UNTREATED WOOD AND CONCRETE.

23. MANUFACTURED LUMBER, PSL, LVL, AND LSL, SHALL BE MANUFACTURED UNDER A PROCESS APPROVED BY THE NATIONAL RESEARCH BOARD. EACH PIECE SHALL BEAR A STAMP OR STAMPS NOTING THE NAME AND PLANT NUMBER OF THE MANUFACTURER, THE GRADE, THE NATIONAL RESEARCH BOARD NUMBER, AND THE QUALITY CONTROL AGENCY. ALL PSL, LVL, AND LSL LUMBER SHALL BE MANUFACTURED IN ACCORDANCE WITH ICC-ES REPORT ESR-1387 USING DOUGLAS FIR VENEER GLUED WITH A WATERPROOF ADHESIVE MEETING THE REQUIREMENTS OF ASTM D2559 WITH ALL GRAIN PARALLEL WITH THE LENGTH OF THE MEMBER. THE MEMBERS SHALL HAVE THE FOLLOWING MINIMUM PROPERTIES:

    PSL (2.0E) Fb = 2900 PSI, E = 2000 KSI, Fv = 290 PSI
    LVL (2.0E) Fb = 2600 PSI, E = 2000 KSI, Fv = 285 PSI
    LSL (1.55E) Fb = 2325 PSI, E = 1550 KSI, Fv = 310 PSI

24. DESIGN SHOWN ON PLANS IS BASED ON LUMBER MANUFACTURED BY THE WEYERHAEUSER CORPORATION. ALTERNATE MANUFACTURERS MAY BE USED SUBJECT TO REVIEW AND APPROVAL BY THE ARCHITECT AND STRUCTURAL ENGINEER, ALTERNATE JOIST HANGERS AND OTHER HARDWARE MAY BE SUBSTITUTED FOR ITEMS SHOWN PROVIDED THEY HAVE ICC APPROVAL FOR EQUAL OR GREATER LOAD CAPACITIES. ALL JOIST HANGERS AND OTHER HARDWARE SHALL BE COMPATIBLE IN SIZE WITH MEMBERS PROVIDED.

    MANUFACTURED LUMBER PRODUCTS SHALL BE INSTALLED WITH A MOISTURE CONTENT OF 12% OR LESS. THE CONTRACTOR SHALL MAKE PROVISIONS DURING CONSTRUCTION TO PREVENT THE MOISTURE CONTENT OF INSTALLED BEAMS FROM EXCEEDING 12%. EXCESSIVE DEFLECTIONS MAY OCCUR IF MOISTURE CONTENT EXCEEDS THIS VALUE.

25. UNLESS NOTIFIED OTHERWISE, PRESSURE TREATED WOOD SHALL BE TREATED PER AWPA STANDARD. PRESSURETREATED WOOD FOR ABOVE GROUND USE SHALL BE TREATED TO A RENTION OF 0.25 PCF. WOOD IN CONTINUOUS CONTACT WITH FRESH WATER OR SOIL SHALL BE TREATED TO A RETENTION OF 0.40 PCF. WOOD FOR USE IN PERMANENT FOUNDATIONS SHALL BE TREATED TO A RETENTION OF 0.60 PCF. SODIUM BORATE (SBX) TREATED WOOD SHALL NOT BE USED WHERE EXPOSED TO WEATHER. FASTENERS AND TIMBER CONNECTORS IN DIRECT CONTACT WITH ACQ-A, CBA-A, CA-B, OR SBX TREATED WOOD SHALL BE G185 OR A185 HOT DIPPED OR CONTINUOUS HOT-GALVANIZED PER ASTM A653. FASTENERS AND TIMBER CONNECTORS IN DIRECT CONTACT WITH ACZA TREATED WOOD SHALL BE TYPE 304 OR 316 STAINLESS STEEL.

atlas associates

Atlas Associate International
5280 Highland Dr.
Bellevue, Washington
98006
206.488.3688 v
gengtan@gmail.com
www.Atlasai.net

Mercer New House

2423 63RD AVE SE
MERCER ISLAND, WA 98040

project no: 53-19

SUBCONSULTANT:

GL ARCHITECTURAL ENGINEERING
PO BOX 1040
TACOMA, WA 98401-1040
email: akegl2002@gmail.com
phone: (360)747-7509

Issue/Revision:

NO.	ISSUED FOR	DATE
1	5.14 BLDG REVIEW	06.01.2020

© 2015 ATLAS ARCHITECTS COMPANY
THESE DRAWINGS ARE THE PROPERTY OF ATLAS ARCHITECTS COMPANY AND ARE NOT TO BE REPRODUCED IN ANY MANNER, EXCEPT WITH THE PRIOR WRITTEN PERMISSION OF ATLAS.

Drawn By	Checked By	Date
TG/GL	GL	01/2020

Sheet Title
GENERAL STRUCTURAL NOTES

Scale
PER PLAN

Sheet Number
G1.0

26. TIMBER CONNECTORS CALLED OUT BY LETTERS AND NUMBERS SHALL BE "STRONG-TIE" BY SIMPSON COMPANY, AS SPECIFIED IN THEIR CATALOG NUMBER C-2015. EQUIVALENT DEVICES BY OTHER MANUFACTURERS MAY BE SUBSTITUTED, PROVIDED THEY HAVE ICC-ES APPROVAL FOR EQUAL OR GREATER LOAD CAPACITIES. PROVIDE NUMBER AND SIZE OF FASTENERS AS SPECIFIED BY MANUFACTURER. CONNECTORS SHALL BE INSTALLED IN ACCORDANCE WITH THE MANUFACTURER'S RECOMMENDATIONS.

27. WOOD FASTENERS
    A. NAIL SIZES SPECIFIED ON DRAWINGS ARE BASED ON THE FOLLOWING SPECIFICATIONS:

SIZE	LENGTH	DIAMETER
8d	2-1/2"	0.131"
16d BOX	3-1/2"	0.135"

IF CONTRACTOR OR OWNER PROPOSES THE USE OF ALTERNATE NAILS, THEY SHALL SUBMIT NAIL SPECIFICATIONS TO THE ENGINEER (PRIOR TO CONSTRUCTION) FOR REVIEW AND APPROVAL.

NAILS - PLYWOOD (APA RATED SHEATHING) FASTENERS TO FRAMING SHALL BE DRIVEN FLUSH TO FACE OF SHEATHING WITH NO COUNTERSINKING PERMITTED.

28. PLYWOOD SHEATHING SHALL BE GRADE C-D, EXTERIOR GLUE OR STRUCTURAL II, EXTERIOR GLUE IN CONFORMANCE WITH DOC PS 1. ORIENTED STRAND BOARD OF EQUIVALENT THICKNESS, EXPOSURE RATING AND PANEL INDEX MAY BE USED IN LIEU OF PLYWOOD.

ROOF SHEATHING SHALL BE ½" (NOMINAL) WITH SPAN RATING $^{32}/_{16}$.
FLOOR SHEATHING SHALL BE ¾" (NOMINAL) WITH SPAN RATING $^{48}/_{24}$.
WALL SHEATHING SHALL BE 1/2" (NOMINAL) WITH SPAN RATING 24/0.

REFER TO WOOD FRAMING NOTES BELOW FOR TYPICAL NAILING REQUIREMENTS.

26. PREFABRICATED CONNECTOR PLATE WOOD ROOF TRUSSES SHALL BE DESIGNED BY THE MANUFACTURER IN ACCORDANCE WITH THE "NATIONAL DESIGN STANDARD FOR METAL PLATE-CONNECTED WOOD TRUSS CONSTRUCTION, ANSI/TPI 1" BY THE TRUSS PLATE INSTITUTE FOR THE SPANS AND CONDITIONS SHOWN ON THE PLANS. LOADING SHALL BE AS FOLLOWS:

TOP CHORD LIVE LOAD	25 PSF
TOP CHORD DEAD LOAD	10 PSF
BOTTOM CHORD DEAD LOAD	5 PSF
TOTAL LOAD	40 PSF
WIND UPLIFT (TOP CHORD)	5 PSF
BOTTOM CHORD LIVE LOAD	10 PSF

(BOTTOM CHORD LIVE LOAD DOES NOT ACT CONCURENTLY WITH THE ROOF LIVE LOAD)

WOOD TRUSSES SHALL UTILIZE APPROVED CONNECTOR PLATES (GANGNAIL OR EQUAL). SUBMIT SHOP DRAWINGS AND DESIGN CALCULATIONS TO THE ARCHITECT AND STRUCTURAL ENGINEER FOR REVIEW PRIOR TO FABRICATION. SUBMITTED DOCUMENTS SHALL BE SIGNED AND STAMPED BY A STRUCTURAL ENGINEER REGISTERED IN THE STATE OF WASHINGTON. PROVIDE FOR SHAPES, BEARING POINTS, INTERSECTIONS, HIPS, VALLEYS, ETC., SHOWN ON THE DRAWINGS. EXACT COMPOSITION OF SPECIAL HIP, VALLEY, AND INTERSECTION AREAS (USE OF GIRDER TRUSSES, JACK TRUSSES, STEP-DOWN TRUSSES, ETC.) SHALL BE DETERMINED BY THE MANUFACTURER UNLESS SPECIFICALLY INDICATED ON THE PLANS. PROVIDE ALL TRUSS TO TRUSS AND TRUSS TO GIRDER TRUSS CONNECTION DETAILS AND REQUIRED CONNECTION MATERIALS. PROVIDE FOR ALL TEMPORARY AND PERMANENT TRUSS BRACING AND BRIDGING.

27. WOOD FRAMING NOTES--THE FOLLOWING APPLY UNLESS OTHERWISE SHOWN ON THE PLANS:

A. ALL WOOD FRAMING DETAILS NOT SHOWN OTHERWISE SHALL BE CONSTRUCTED TO THE MINIMUM STANDARDS OF THE INTERNATIONAL BUILDING CODE. MINIMUM NAILING, UNLESS OTHERWISE NOTED, SHALL CONFORM TO IBC TABLE 2304.10.1. COORDINATE THE SIZE AND LOCATION OF ALL OPENINGS WITH MECHANICAL AND ARCHITECTURAL DRAWINGS.

B. WALL FRAMING:
ALL STUDS SHALL BE SPACED AT 16" O.C. UNO. TWO STUDS MINIMUM SHALL BE PROVIDED AT THE END OF ALL WALLS AND AT EACH SIDE OF ALL OPENINGS, AND AT BEAM OR HEADER BEARING LOCATIONS. TWO 2x8 HEADERS SHALL BE PROVIDED OVER ALL OPENINGS NOT OTHERWISE NOTED. SOLID BLOCKING FOR WOOD COLUMNS SHALL BE PROVIDED THROUGH FLOORS TO SUPPORTS BELOW. PROVIDE CONTINUOUS SOLID BLOCKING AT MID-HEIGHT OF ALL STUD WALLS OVER 10'-0" IN HEIGHT.

ALL WALLS SHALL HAVE A SINGLE BOTTOM PLATE AND A DOUBLE TOP PLATE. END NAIL TOP PLATE TO EACH STUD WITH TWO 16d NAILS, AND TOENAIL OR END NAIL EACH STUD TO BOTTOM PLATE WITH TWO 16d NAILS. FACE NAIL DOUBLE TOP PLATE WITH 16d @ 12" O.C. AND LAP MINIMUM 4'-0" AT JOINTS AND PROVIDE EIGHT 16d NAILS @ 4" O.C. EACH SIDE JOINT.

ALL STUD WALLS SHALL HAVE THEIR LOWER WOOD PLATES ATTACHED TO WOOD FRAMING BELOW WITH TWO ROWS OF 16d NAILS @ 12" ON-CENTER, OR ATTACHED TO CONCRETE BELOW WITH 5/8" DIAMETER ANCHOR BOLTS @ 4'-0" ON-CENTER EMBEDDED 7" MINIMUM, UNLESS INDICATED OTHERWISE. INDIVIDUAL MEMBERS OF BUILT-UP POSTS SHALL BE NAILED TO EACH OTHER WITH TWO ROWS OF 16d @12" ON-CENTER. UNLESS OTHERWISE NOTED, GYPSUM WALLBOARD SHALL BE FASTENED TO THE INTERIOR SURFACE OF ALL STUDS AND PLATES WITH NO. 6 X 1-1/4" TYPE S OR W SCREWS @ 8" ON-CENTER. UNLESS INDICATED OTHERWISE, 1/2" (NOMINAL) APA RATED SHEATHING (SPAN RATING 24/0) SHALL BE NAILED TO ALL EXTERIOR SURFACES WITH 8d NAILS @ 6" ON-CENTER AT PANEL EDGES AND TOP AND BOTTOM PLATES (BLOCK UN-SUPPORTED EDGES) AND TO ALL INTERMEDIATE STUDS AND BLOCKING WITH 8d NAILS @ 12" ON-CENTER ALLOW 1/8" SPACING AT ALL PANEL EDGES AND PANEL ENDS.

C. WALL ANCHORAGE:
EXPANSION BOLTS INTO CONCRETE SHALL BE WEDGE-ALL ANCHORS AS MANUFACTURED BY THE SIMPSON STRONG TIE COMPANY AND INSTALLED IN STRICT CONFORMANCE TO ICC-ES REPORT NUMBER ESR-1396, INCLUDING MINIMUM EMBEDMENT REQUIREMENTS.

D. FLOOR AND ROOF FRAMING: PROVIDE DOUBLE JOISTS UNDER ALL PARALLEL PARTITIONS THAT EXTEND OVER MORE THAN HALF THE JOIST LENGTH AND AROUND ALL OPENINGS IN FLOORS OR ROOFS UNLESS OTHERWISE NOTED. PROVIDE SOLID BLOCKING AT ALL BEARING POINTS. TOENAIL JOISTS TO SUPPORTS WITH TWO 16d NAILS. ATTACH TIMBER JOISTS TO FLUSH HEADERS OR BEAMS WITH SIMPSON METAL JOIST HANGERS IN ACCORDANCE WITH NOTES ABOVE. NAIL ALL MULTI-JOIST BEAMS TOGETHER WITH TWO ROWS 16d @ 12" ON-CENTER.

UNLESS OTHERWISE NOTED ON THE PLANS, PLYWOOD ROOF AND FLOOR SHEATHING SHALL BE LAID UP WITH GRAIN PERPENDICULAR TO SUPPORTS AND NAILED AT 6" ON-CENTER WITH 8d NAILS TO FRAMED PANEL EDGES, STRUTS AND OVER STUD WALLS AS SHOWN ON PLANS AND @ 12" ON-CENTER TO INTERMEDIATE SUPPORTS. PROVIDE APPROVED PLYWOOD EDGE CLIPS CENTERED BETWEEN JOISTS/ TRUSSES AT UNBLOCKED ROOF SHEATHING EDGES. ALL FLOOR SHEATHING EDGES SHALL HAVE APPROVED T&G JOINTS OR SHALL BE SUPPORTED WITH SOLID BLOCKING. ALLOW 1/8" SPACING AT ALL PANEL EDGES AND ENDS OF FLOOR AND ROOF SHEATHING. TOENAIL BLOCKING TO SUPPORTS WITH 16d @ 12" ON-CENTER UNLESS OTHERWISE NOTED.

22. GLUED LAMINATED MEMBERS SHALL BE FABRICATED IN CONFORMANCE WITH ASTM AND AITC STANDARDS. EACH MEMBER SHALL BEAR AN A.I.T.C. IDENTIFICATION MARK AND SHALL BE ACCOMPANIED BY AN A.I.T.C. CERTIFICATE OF CONFORMANCE. ALL SIMPLE SPAN BEAMS SHALL BE DOUGLAS FIR COMBINATION 24F-V4, Fb = 2,400 PSI, Fv = 265 PSI. ALL CANTILEVERED BEAMS SHALL BE DOUGLAS FIR COMBINATION 24F-V8, Fb = 2400 PSI, Fv = 265 PSI. CAMBER ALL SIMPLE SPAN GLULAM BEAMS TO 3,000' RADIUS, UNLESS SHOWN OTHERWISE ON THE PLANS.

ANCHORAGE

23. EXPANSION BOLTS INTO CONCRETE SHALL BE WEDGE-ALL ANCHORS AS MANUFACTURED BY THE SIMPSON STRONG TIE COMPANY AND INSTALLED IN STRICT CONFORMANCE TO ICC-ES REPORT NUMBER ESR-1396, INCLUDING MINIMUM EMBEDMENT REQUIREMENTS.

EPOXY-GROUTED ITEMS (THREADED RODS OR REINFORCING BAR) SPECIFIED ON THE DRAWINGS SHALL BE INSTALLED USING "SET" HIGH STRENGTH EPOXY AS MANUFACTURED BY THE SIMPSON STRONG TIE COMPANY. INSTALL IN STRICT ACCORDANCE WITH ICC-ES REPORT NO. ESR-1772. SPECIAL INSPECTION OF INSTALLATION IS REQUIRED. RODS SHALL BE ASTM A-36 UNLESS OTHERWISE NOTED.

24. ALL ANCHORS EMBEDDED IN MASONRY OR CONCRETE SHALL BE A307 HEADED BOLTS OR A36 THREADED ROD WITH AN ASTM 563 HEAVY HEX NUT TACK WELDED ON THE EMBEDDED END.

RENOVATION

25. DEMOLITION: CONTRACTOR SHALL VERIFY ALL EXISTING CONDITIONS BEFORE COMMENCING ANY DEMOLITION. SHORING SHALL BE INSTALLED TO SUPPORT EXISTING CONSTRUCTION AS REQUIRED AND IN A MANNER SUITABLE TO THE WORK SEQUENCES. DEMOLITION DEBRIS SHALL NOT BE ALLOWED TO DAMAGE OR OVERLOAD THE EXISTING STRUCTURE. LIMIT CONSTRUCTION LOADING (INCLUDING DEMOLITION DEBRIS) ON EXISTING FLOOR SYSTEMS TO 40 PSF.

atlas associates

Atlas Associate International

5280 Highland Dr.
Bellevue, Washington
98006
206.488.3688 v
gengtan@gmail.com
www.Atlasai.net

Mercer New House

2423 63RD AVE SE
MERCER ISLAND, WA 98040

project no: 53-19

SUBCONSULTANT:

GL ARCHITECTURAL ENGINEERING
PO BOX 1040
TACOMA, WA 98401-1040
email: akegl2002@gmail.com
phone: (360)747-7509

Issue/Revision:

NO.	ISSUED FOR	DATE

© 2015 ATLAS ARCHITECTS COMPANY
THESE DRAWINGS ARE THE PROPERTY OF ATLAS ARCHITECTS COMPANY AND ARE NOT TO BE REPRODUCED IN ANY MANNER, EXCEPT WITH THE PRIOR WRITTEN PERMISSION OF ATLAS.

Drawn By	Checked By	Date
TG/GL	GL	01/2020

Sheet Title
GENERAL STRUCTURAL NOTES

Scale
PER PLAN

Sheet Number
G1.1

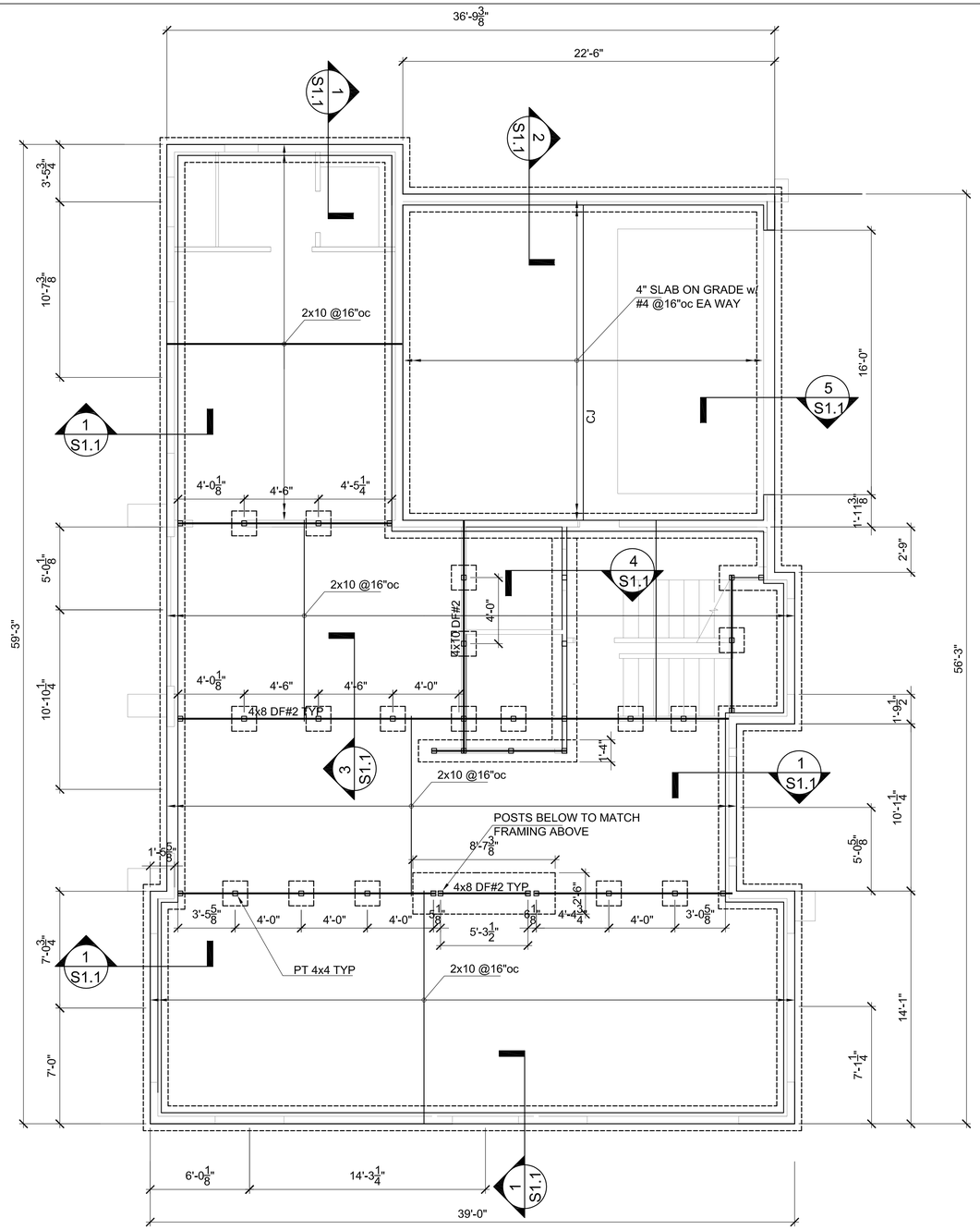

N
Plan

FOUNDATION PLAN

SCALE: 1/4"=1'

PLAN NOTES:

1. DO NOT SCALE DRAWINGS. THE CONTRACTOR SHALL USE DIMENSIONS SHOWN IN ARCHITECTURAL DRAWINGS AND ACTUAL FIELD MEASUREMENTS. NOTIFY THE ENGINEER OF ANY DISCREPANCIES.
2. ALL DIMENSIONS ARE TO FACE OF STUDS, FACE OF BEAMS, AND FACE OF CONCRETE STEM WALL AND CONCRETE FLAT WORK. CENTER OF POSTS AND PIERS,
3. ALL EXTERIOR SHEAR WALLS SHALL BE SW1 AS NOTED IN SHEARWALL SCHEDULE, UNLESS NOTIFIED OTHERWISE. REFER TO SHEARWALL KEY PLAN.
4. TYPICAL HEADER SIZE SHALL BE 4X8 DF NO.2, UNO.
5. PROVIDE SOLID VERTICAL GRAIN BLOCKING IN THE FLOOR FRAMING AT ALL BEARING STUDS.
6. GC SHALL VERIFY ALL EXISTING SITE CONDITIONS, UTILITY AND SERVICES PRIOR TO ANY TRENCHING, EXCAVATION AND DIGGING.
7. GC SHALL REMOVE ANY RUBBISH, DEBRIS, AND ORGANIC MATERIALS FROM THE SITE CLEARING AREA SHOWN.
8. GC SHALL PROVIDE TEMPERARY BRACING PRIOR TO THE COMPLETION OF FINAL CONNECTIONS.
9. REFER TO GENERAL NOTES FOR OTHER REQUIREMENTS.

HTT4 HOLDDOWN AT BOTTOM OF WALL

CONC STEM WALL AND FDN

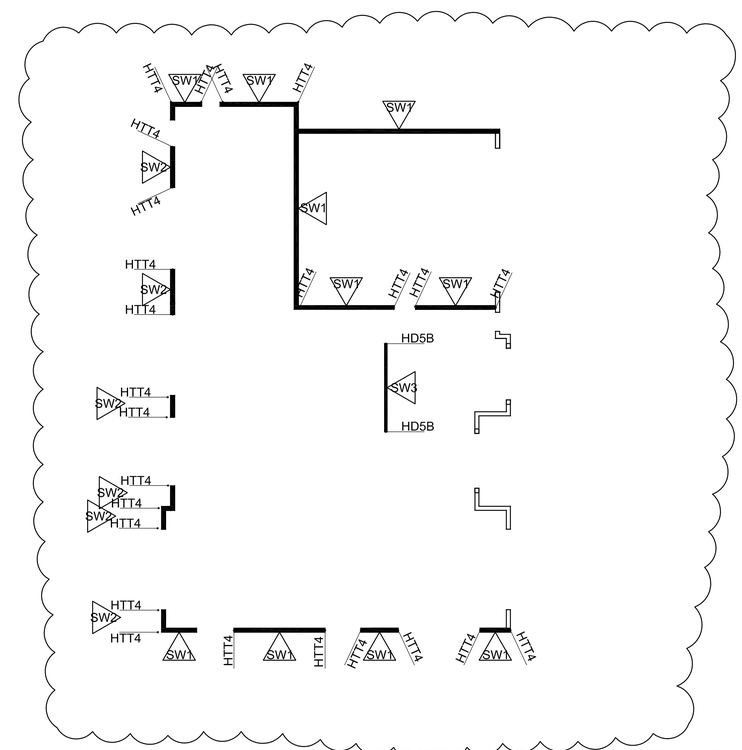

SHEARWALL KEY PLAN (FIRST FLOOR SHEAR WALLS)

atlas associates

Atlas Associate International
5280 Highland Dr.
Bellevue, Washington
98006
206.488.3688 v
gengtan@gmail.com
www.Atlasai.net

Mercer New House

2423 63RD AVE SE
MERCER ISLAND, WA 98040

project no: 53-19

SUBCONSULTANT:

GUIBIN LU
STATE OF WASHINGTON
42309
REGISTERED
PROFESSIONAL ENGINEER

GL ARCHITECTURAL ENGINEERING
PO BOX 1040
TACOMA, WA 98401-1040
email: akegl2002@gmail.com
phone: (360)747-7509

Issue/Revision:

1	5.14 BLDG REVIEW	06.01.2020

NO.	ISSUED FOR	DATE

© 2015 ATLAS ARCHITECTS COMPANY
THESE DRAWINGS ARE THE PROPERTY OF ATLAS ARCHITECTS COMPANY AND ARE NOT TO BE REPRODUCED IN ANY MANNER, EXCEPT WITH THE PRIOR WRITTEN PERMISSION OF ATLAS.

Drawn By	Checked By	Date
TG/GL	GL	01/2020

Sheet Title

FOUNDATION PLAN

Scale
PER PLAN

Sheet Number

S1.0

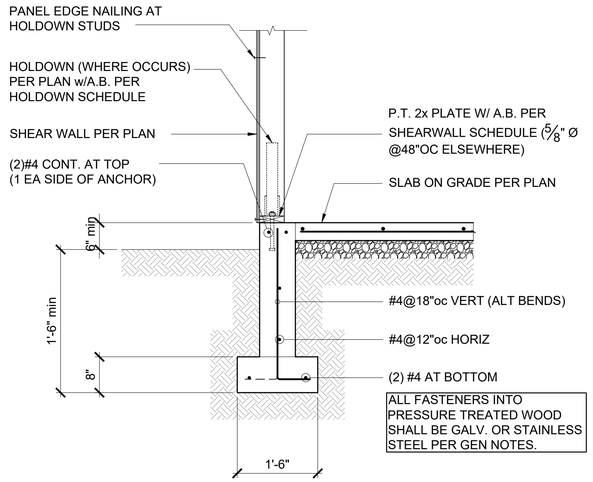

2 CONC STEM WALL AT GARAGE

SCALE:NTS

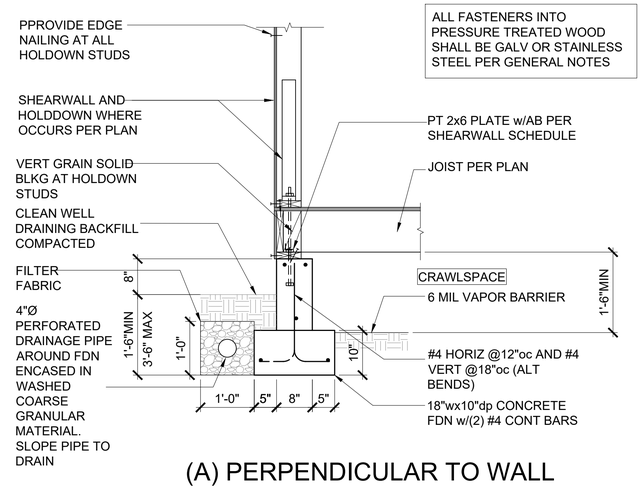

(A) PERPENDICULAR TO WALL

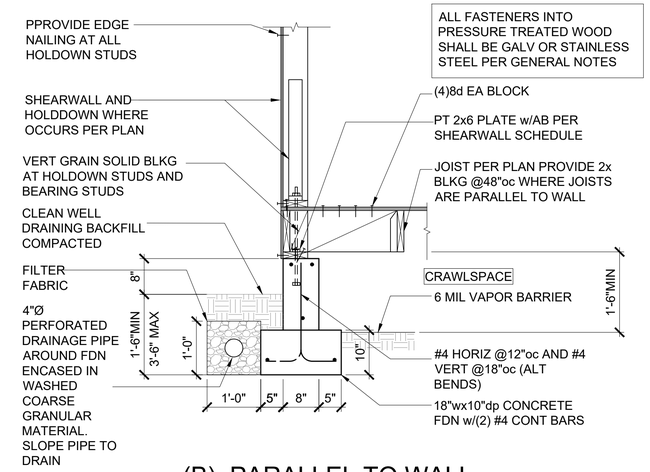

(B) PARALLEL TO WALL

1 2x JOIST TO CONC STEM WALL

SCALE:NTS

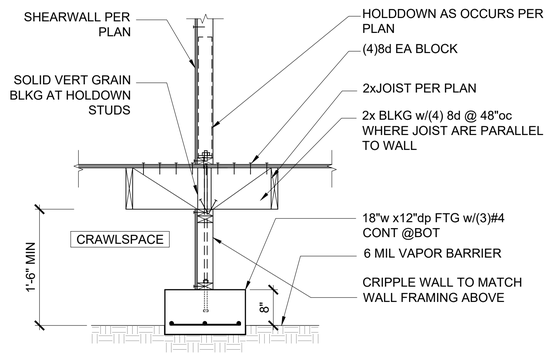

4 CRIPPLE WALL FOOTING

SCALE:NTS

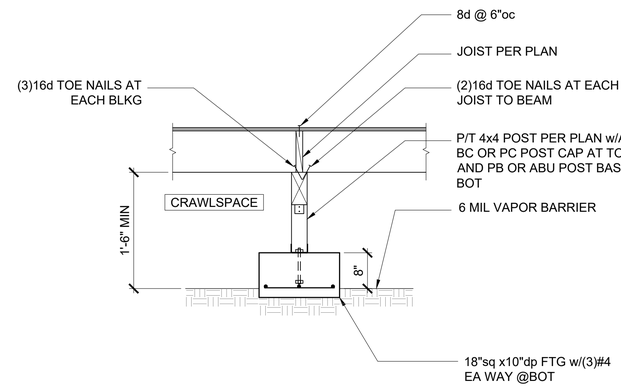

3 ISOLATED FOOTING

SCALE:NTS

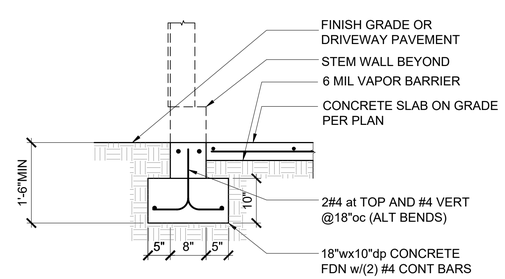

5 FOOTING AT GARAGE DOOR

SCALE:NTS

atlas associates

Atlas Associate International

5280 Highland Dr.
Bellevue, Washington
98006
206.488.3688 v
gengtan@gmail.com
www.Atlasai.net

Mercer New House

2423 63RD AVE SE
MERCER ISLAND, WA 98040

project no: 53-19

SUBCONSULTANT:

GL ARCHITECTURAL ENGINEERING
PO BOX 1040
TACOMA, WA 98401-1040
email: akegl2002@gmail.com
phone: (360)747-7509

Issue/Revision:

NO.	ISSUED FOR	DATE

© 2015 ATLAS ARCHITECTS COMPANY

THESE DRAWINGS ARE THE PROPERTY OF ATLAS ARCHITECTS COMPANY AND ARE NOT TO BE REPRODUCED IN ANY MANNER, EXCEPT WITH THE PRIOR WRITTEN PERMISSION OF ATLAS.

Drawn By	Checked By	Date
TG/GL	GL	01/2020

Sheet Title

FOUNDATION FRAMING DTLS

Scale

PER PLAN

Sheet Number

S1.1

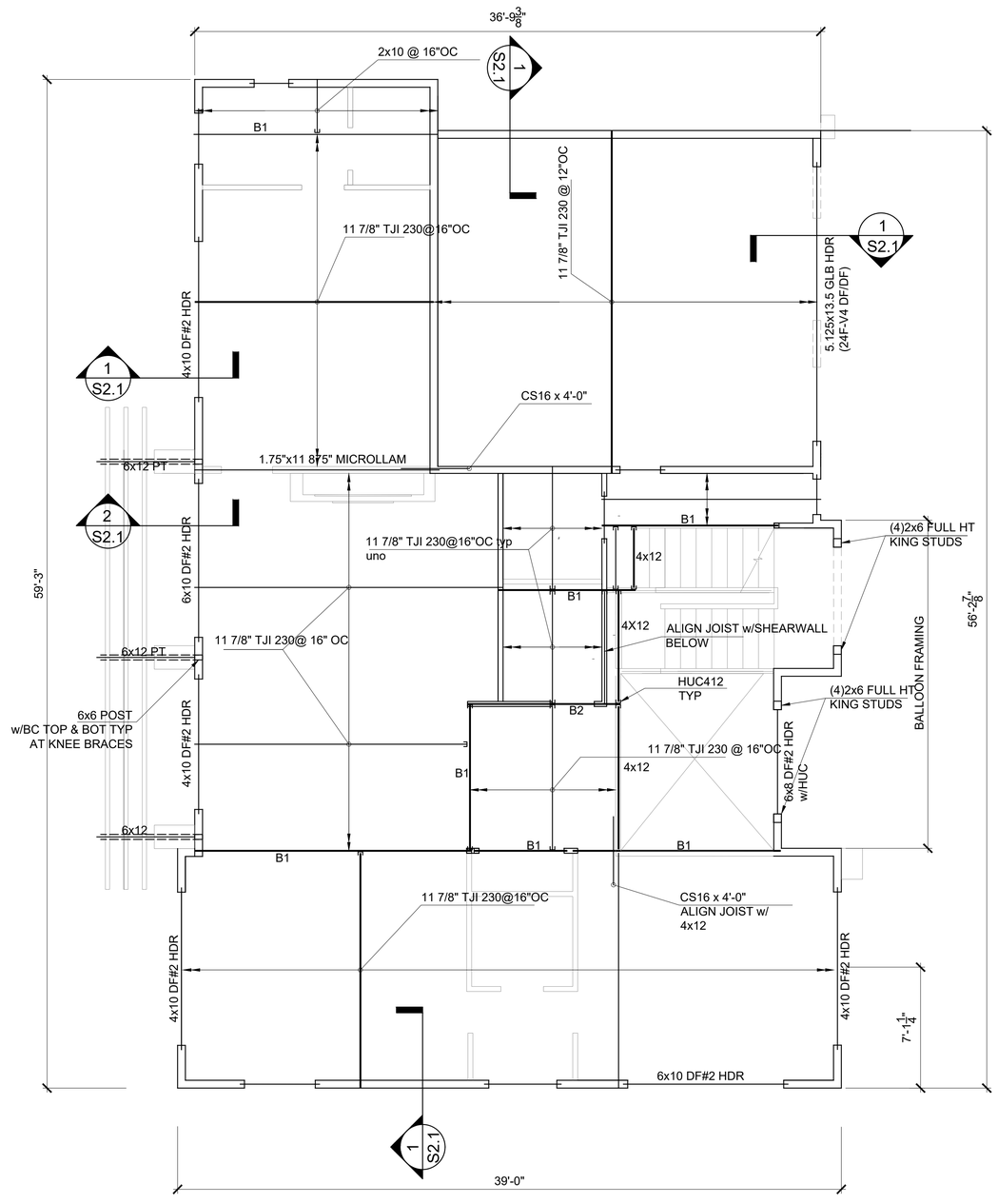

N
Plan

2ND FLR FRAMING PLAN

SCALE: 1/4"=1'

PLAN NOTES:

1. DO NOT SCALE DRAWINGS. THE CONTRACTOR SHALL USE DIMENSIONS SHOWN IN ARCHITECTURAL DRAWINGS AND ACTUAL FIELD MEASUREMENTS. NOTIFY THE ENGINEER OF ANY DISCREPANCIES.
2. ALL DIMENSIONS ARE TO FACE OF STUDS, FACE OF BEAMS, AND FACE OF CONCRETE STEM WALL AND CONCRETE FLAT WORK. CENTER OF POSTS AND PIERS,
3. TYPICAL HEADER SIZE SHALL BE 4X8 DF NO.2, UNO.
4. TYPICAL EXTERIOR WOOD STUDS SIZE SHALL BE 2X6, UNO.
5. UNLESS NOTIFIED OTHERWISE, TWO STUDS MINIMUM SHALL BE PROVIDED AT THE END OF ALL WALLS AND AT EACH SIDE OF ALL OPENINGS, AND AT BEAM OR HEADER BEARING LOCATIONS.
6. PROVIDE SOLID VERTICAL GRAIN BLOCKING IN THE FLOOR FRAMING AT ALL BEARING STUDS. 1
7. ALL EXTERIOR WALLS SHALL BE SHEATHED AND NAILED AS SW1 IN SHEARWALL SCHEDULE, UNO. REFER TO SHEARWALL KEYPLAN.
8. REFER TO GENERAL NOTES FOR MORE INFORMATION.

LEGEND:

- NEW ROOF LINE
- WALL ABOVE
- NON-BEARING WALL BELOW
- STRUCTURAL WALL (BEARING AND/OR SHEARWALL)
- SPANNING / EXTENT
- OVERFRAMING
- SW1 — SHEARWALL TYPE
- CS16 — HOLDDOWN STRAP AT BOT OF SHEARWALL

FLUSH BEAM SCHEDULE		
B#	MEMBER SIZE	HANGER
B1	3.5x11.875 PARALLAM (2.0E)	LBV3.5-11.88
B2	5.25x11.875 PARALLAM (2.0E)	

atlas associates

Atlas Associate International

5280 Highland Dr.
Bellevue, Washington
98006
206.488.3688 v
gengtan@gmail.com
www.Atlasai.net

Mercer New House

2423 63RD AVE SE
MERCER ISLAND, WA 98040

project no: 53-19

SUBCONSULTANT:

GUIBIN LIU
STATE OF WASHINGTON
42309
REGISTERED
PROFESSIONAL ENGINEER

GL ARCHITECTURAL ENGINEERING
PO BOX 1040
TACOMA, WA 98401-1040
email: akegl2002@gmail.com
phone: (360)747-7509

Issue/Revision:

NO.	ISSUED FOR	DATE
1	5.14 BLDG REVIEW	06.01.2020

© 2015 ATLAS ARCHITECTS COMPANY
THESE DRAWINGS ARE THE PROPERTY OF ATLAS ARCHITECTS COMPANY AND ARE NOT TO BE REPRODUCED IN ANY MANNER, EXCEPT WITH THE PRIOR WRITTEN PERMISSION OF ATLAS.

Drawn By	Checked By	Date
TG/GL	GL	01/2020

Sheet Title

2ND FLOOR FRAMING PLANS

Scale
PER PLAN

Sheet Number

S2.0

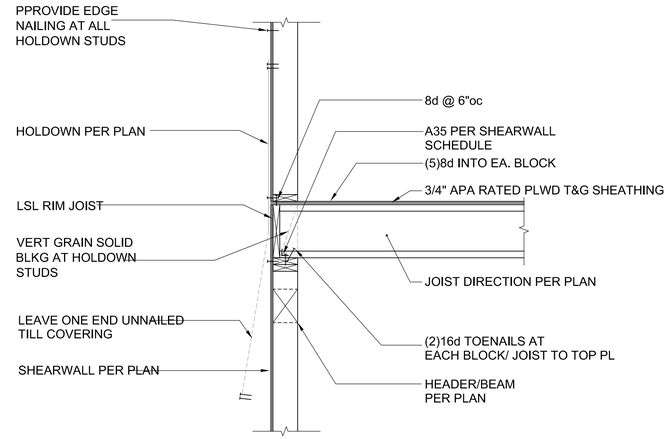

(A) PERPENDICULAR TO WALL

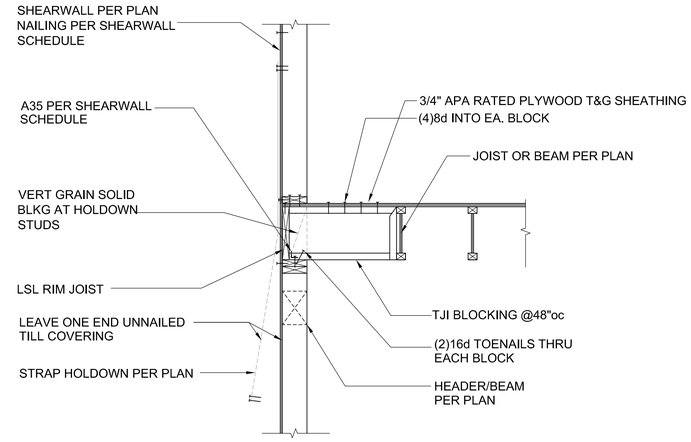

(B) PARALLEL TO WALL

1 TJI JOIST TO WALL

SCALE:NTS

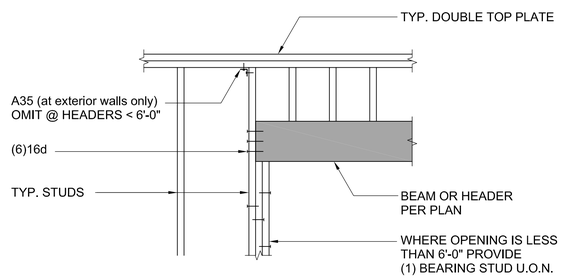

4 TYPICAL HEADER FRAMING

SCALE:NTS

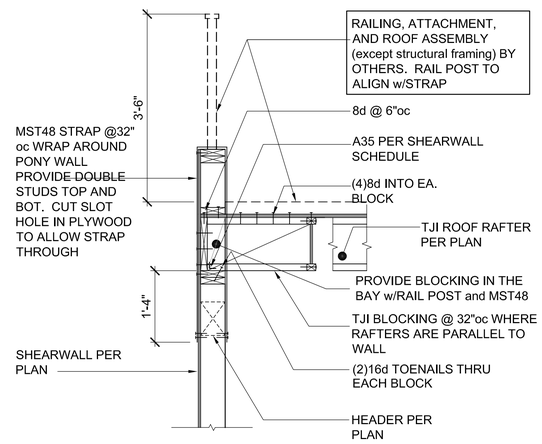

3 TYPICAL RAILING FRAMING

SCALE:NTS

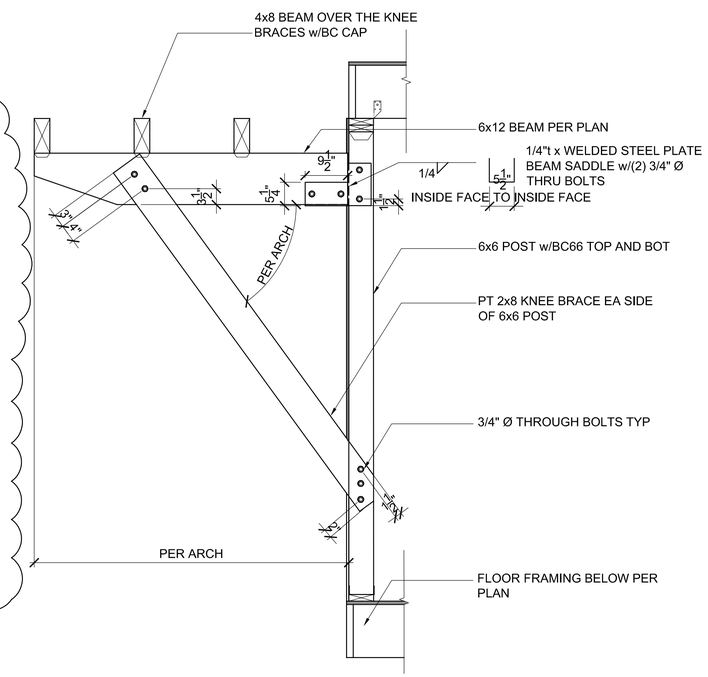

2 WOOD TRELLIS AND KNEE BRACE

SCALE:NTS

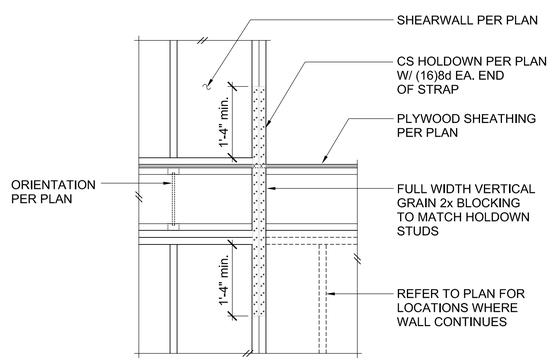

5 TYPICAL CS STRAP HOLDOWN

SCALE:NTS

atlas associates

Atlas Associate International
5280 Highland Dr.
Bellevue, Washington
98006
206.488.3688 v
gengtan@gmail.com
www.Atlasai.net

Mercer New House

2423 63RD AVE SE
MERCER ISLAND, WA 98040

project no: 53-19

SUBCONSULTANT:

GL ARCHITECTURAL ENGINEERING
PO BOX 1040
TACOMA, WA 98401-1040
email: akegl2002@gmail.com
phone: (360)747-7509

Issue/Revision:

NO.	ISSUED FOR	DATE
1	5.14 BLDG REVIEW	06.01.2020

© 2015 ATLAS ARCHITECTS COMPANY
THESE DRAWINGS ARE THE PROPERTY OF ATLAS ARCHITECTS COMPANY AND ARE NOT TO BE REPRODUCED IN ANY MANNER, EXCEPT WITH THE PRIOR WRITTEN PERMISSION OF ATLAS.

Drawn By	Checked By	Date
TG/GL	GL	01/2020

Sheet Title
FLOOR FRAMING DTLS

Scale
PER PLAN

Sheet Number
S2.1

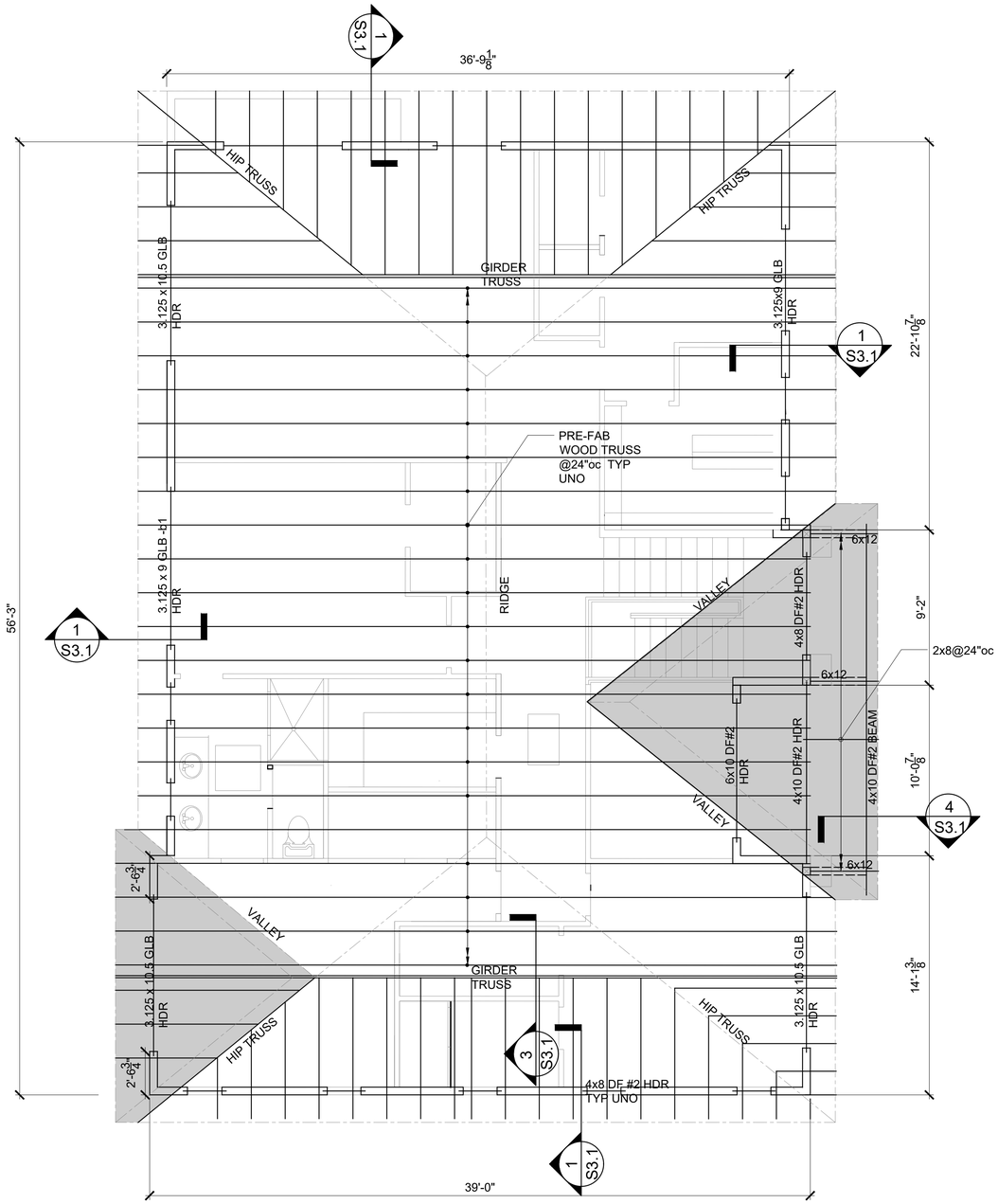

N
Plan

ROOF FRAMING PLAN

SCALE: 1/4"=1'

PLAN NOTES:

1. DO NOT SCALE DRAWINGS. THE CONTRACTOR SHALL USE DIMENSIONS SHOWN IN ARCHITECTURAL DRAWINGS AND ACTUAL FIELD MEASUREMENTS. NOTIFY THE ENGINEER OF ANY DISCREPANCIES.
2. ALL DIMENSIONS ARE TO FACE OF STUDS, FACE OF BEAMS, AND FACE OF CONCRETE STEM WALL AND CONCRETE FLAT WORK. CENTER OF POSTS AND PIERS,
3. TYPICAL HEADER SIZE SHALL BE 4X8 DF NO.2, UNO.
4. TYPICAL EXTERIOR WOOD STUDS SIZE SHALL BE 2X6, UNO.
5. UNLESS NOTIFIED OTHERWISE, TWO STUDS MINIMUM SHALL BE PROVIDED AT THE END OF ALL WALLS AND AT EACH SIDE OF ALL OPENINGS, AND AT BEAM OR HEADER BEARING LOCATIONS.
6. PROVIDE SOLID VERTICAL GRAIN BLOCKING IN THE FLOOR FRAMING AT ALL BEARING STUDS. 1
7. ALL EXTERIOR WALLS SHALL BE SHEATHED AND NAILED AS SW1 IN SHEARWALL SCHEDULE, UNO. REFER TO SHEARWALL KEYPLAN.
8. REFER TO GENERAL NOTES FOR MORE INFORMATION.

LEGEND:

NEW ROOF LINE

WALL ABOVE

NON-BEARING WALL BELOW

STRUCTURAL WALL (BEARING AND/OR SHEARWALL)

SPANNING

EXTENT

OVERFRAMING

SW1 SHEARWALL TYPE

CS16 HOLDDOWN STRAP AT BOT OF SHEARWALL

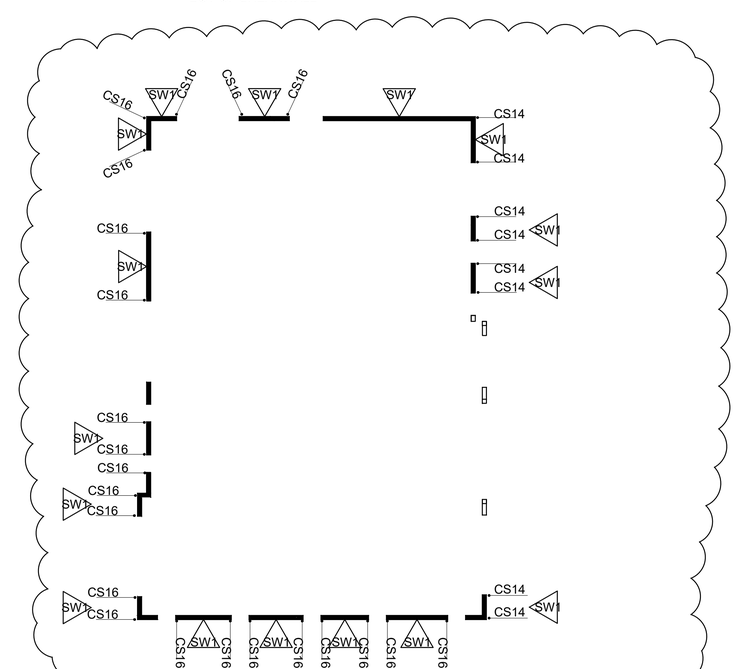

SHEARWALL KEY PLAN (UPPER FLOOR WALLS) 1

atlas associates

Atlas Associate International

5280 Highland Dr.
Bellevue, Washington
98006
206.488.3688 v
gengtan@gmail.com
www.Atlasai.net

Mercer New House

2423 63RD AVE SE
MERCER ISLAND, WA 98040

project no: 53-19

SUBCONSULTANT:

GUIBIN LIU
STATE OF WASHINGTON
42309
REGISTERED
PROFESSIONAL ENGINEER

GL ARCHITECTURAL ENGINEERING
PO BOX 1040
TACOMA, WA 98401-1040
email: akegl2002@gmail.com
phone: (360)747-7509

Issue/Revision:

NO.	ISSUED FOR	DATE
1	5.14 BLDG REVIEW	06.01.2020

© 2015 ATLAS ARCHITECTS COMPANY
THESE DRAWINGS ARE THE PROPERTY OF ATLAS ARCHITECTS COMPANY AND ARE NOT TO BE REPRODUCED IN ANY MANNER, EXCEPT WITH THE PRIOR WRITTEN PERMISSION OF ATLAS.

Drawn By	Checked By	Date
TG/GL	GL	01/2020

Sheet Title

ROOF FRAMING PLANS

Scale
PER PLAN

Sheet Number

S3.0

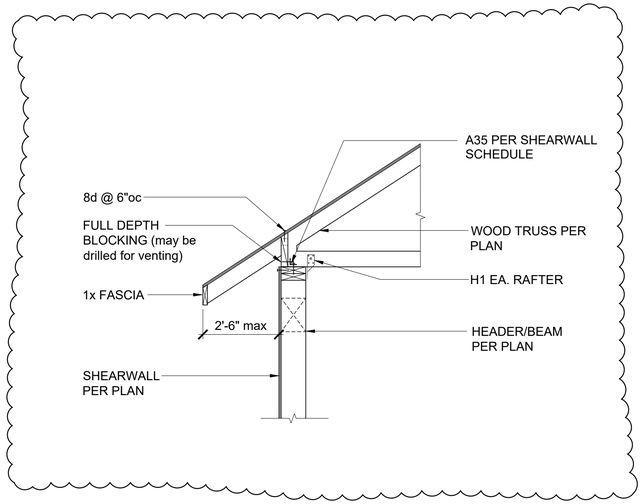

1 WOOD TRUSS TO EXTERIOR WALL

SCALE:NTS

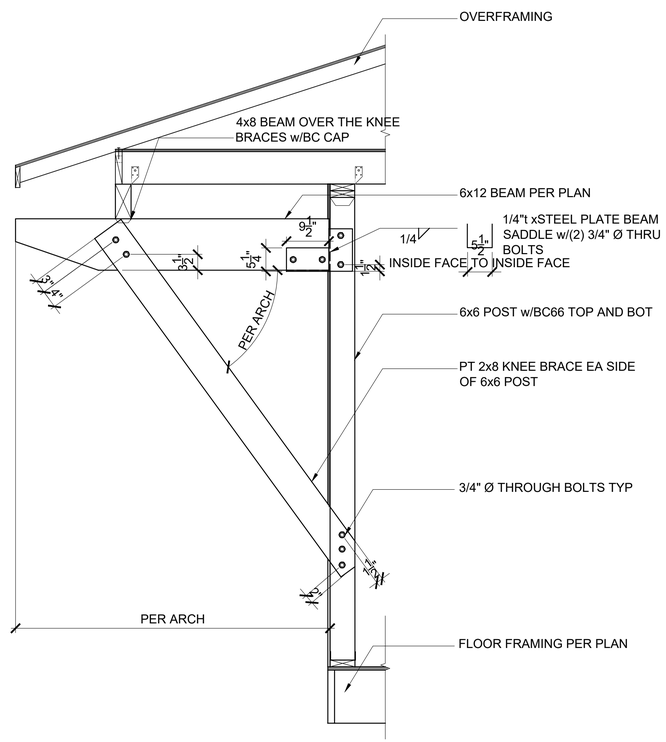

4 ROOF OVERFRAMING TO KNEE BRACES

SCALE:NTS

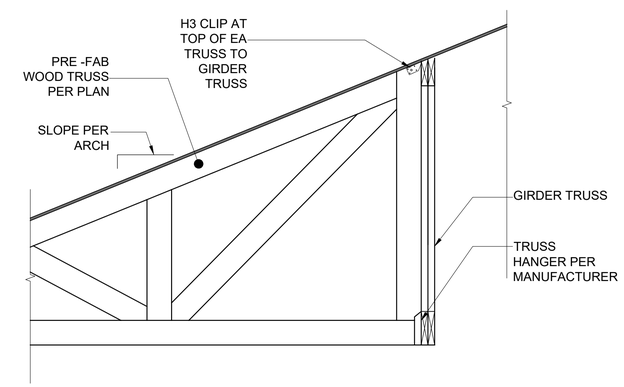

3 WOOD TRUSS TO GIRDER TRUSS

SCALE:NTS

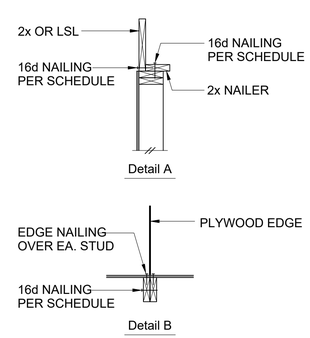

PLAN VIEW AT ABUTTING PANEL EDGES OF SW3 & SW4

SHEARWALL SCHEDULE ①②③⑤⑥⑦

Mark	Sheathing	Panel Edge Nailing	Top Plate Connection		Base Plate Connection	
			if TJI	if 2xor LSL ⑧⑨	at Wood	at Concrete
SW1	1/2" CDX PLYWOOD	8d @ 6"oc	16d @ 6"oc	A35 @ 24"oc	16d @ 6"oc	5/8"Ø A.B. @ 48"oc
SW2	1/2" CDX PLYWOOD	8d @ 4"oc	16d @ 4"oc	A35 @ 16"oc	16d @ 4"oc	5/8"Ø A.B. @ 32"oc
SW3④	1/2" CDX PLYWOOD	8d @ 3"oc	(2)rows 16d @ 6"oc	A35 @ 12"oc	16d @ 3"oc	5/8"Ø A.B. @ 16"oc
SW4④	1/2" CDX PLYWOOD	8d @ 2"oc	(2)rows 16d @ 4 1/2"oc	A35 @ 9"oc	(2)rows 16d @ 4 1/2"oc	5/8"Ø A.B. @ 12"oc

① BLOCK PANEL EDGES WITH 2x LAID FLAT AND NAIL PANELS TO INTERMEDIATE SUPPORTS WITH 8d @ 12"o.c.

② 8d NAILS SHALL BE 0.131"Ø x 2 1/2" (common) - 16d NAILS SHALL BE 0.135"Ø x 3 1/2" (box)

③ EMBED ANCHOR BOLTS AT LEAST 7". EXPANSION BOLTS MAY BE SUBSTITUTED FOR ANCHOR BOLTS WITH 4" EMBEDMENT. ALL BOLTS SHALL HAVE 3" x 3" x 1/4" PLATE WASHERS. HOLDOWN THREADED ROD SHALL EMBED IN CONC AT LEAST 10".

④ 3x STUDS OR DOUBLE STUDS NAILED TOGETHER W/ BASE PLATE NAILING ARE REQUIRED AT ABUTTING PANEL EDGES OF SW3 AND SW4. REFER TO DETAIL B. WHERE 3x STUDS ARE USED FOR SW4, STAGGER NAILS AT ADJOINING PANEL EDGES.

⑤ TWO STUDS MINIMUM ARE REQUIRED AT EACH END OF ALL SHEARWALLS AND ALL END STUDS SHALL RECEIVE PANEL EDGE NAILING.

⑥ ALL EXTERIOR WALLS SHALL BE SW1, UNLESS NOTED OTHERWISE.

⑦ 7/16" O.S.B. MAY BE SUBSITUTED FOR 1/2" CDX.

⑧ LTP4's MAY BE SUBSTITUTED FOR A35's AT CONTRACTORS OPTION.

⑨ A 2x NAILER ATTACHED W/ BASE PLATE NAILING PER DETAIL A MAY BE SUBSTITUTED FOR A35's AT CONTRACTORS/OWNER'S OPTION.

SHEARWALL SCHEDULE

SCALE:NTS

atlas associates

Atlas Associate International

5280 Highland Dr.
Bellevue, Washington
98006
206.488.3688 v
gengtan@gmail.com
www.Atlasai.net

Mercer New House

2423 63RD AVE SE
MERCER ISLAND, WA 98040

project no: 53-19

SUBCONSULTANT:

GL ARCHITECTURAL ENGINEERING
PO BOX 1040
TACOMA, WA 98401-1040
email: akegl2002@gmail.com
phone: (360)747-7509

Issue/Revision:

NO.	ISSUED FOR	DATE
1	5.14 BLDG REVIEW	06.01.2020

© 2015 ATLAS ARCHITECTS COMPANY
THESE DRAWINGS ARE THE PROPERTY OF ATLAS ARCHITECTS COMPANY AND ARE NOT TO BE REPRODUCED IN ANY MANNER, EXCEPT WITH THE PRIOR WRITTEN PERMISSION OF ATLAS.

Drawn By	Checked By	Date
TG/GL	GL	01/2020

Sheet Title

ROOF AND FLOOR FRAMING DTLS

Scale

PER PLAN

Sheet Number

S3.1