STORM DRAINAGE REPORT

PROPOSED RESIDENCE
3406 72ND PL. S.E.
MERCER ISLAND, WA

Prepared for

RKK Construction
3056 70th Avenue SE
Mercer Island, WA 98040

August 2020

Darla Guerrero, P.E.
15020 S.E. 46TH Street
Bellevue, WA 98006
Tel: 425-743-4307

TABLE OF CONTENTS

VICINITY MAP **1**

PROJECT DESCRIPTION **2**

1.1 SITE LOCATION 2
1.2 EXISTING CONDITIONS 2
1.3 DEVELOPED CONDITIONS 2
1.4 MINIMUM REQUIREMENTS (MR) 5
1.4.1 MR #1 – PREPARATION OF STORMWATER SITE PLANS 5
1.4.2 MR #2 – SMALL PROJECT STORMWATER SITE/PLAN REPORT 5
1.4.3 MR #3 – SOURCE CONTROL OF POLLUTION 5
1.4.4 MR #4 – PRESERVATION OF NATURAL DRAINAGE SYSTEMS AND OUTFALLS 5
1.4.5 MR #5 – ONSITE STORMWATER MANAGEMENT 5

ONSITE STORMWATER MANAGEMENT **8**

1.5 TIER 1: MINIMIZE RUNOFF GENERATION 8
1.5.1 SMART SITE DESIGN 8
1.5.2 PRESERVE NATIVE VEGETATION 8
1.5.3 FULL DISPERSION AND FULL INFILTRATION 8
1.5.4 AMENDED SOILS 9
1.6 TIER 2: RETAIN RUNOFF ON SITE 9
1.7 tier 3: infiltrate or disperse runoff prior to discharge 9

APPENDIX A: GEOTECHNICAL REPORT **10**

APPENDIX B: DETENTION DESIGN **30**

APPENDIX C: OPERATIONS AND MAINTENANCE MANUAL **32**

APPENDIX D: DOWNSTREAM LEVEL ONE ANALYSIS **36**

APPENDIX E: CITY OF MERCER ISLAND HAZARD MAPS **37**

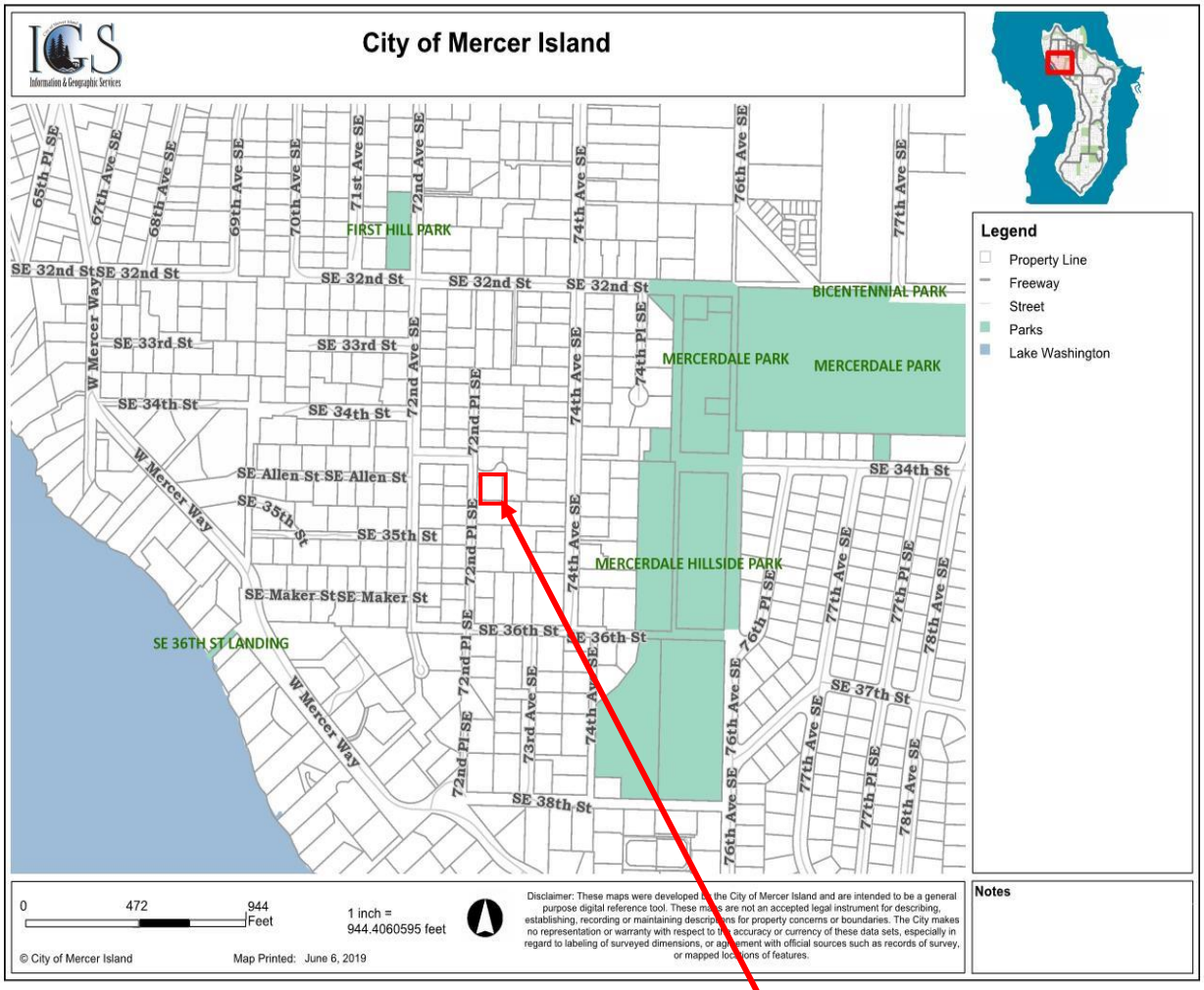

PROJECT SITE

VICINITY MAP

PROJECT DESCRIPTION

1.1 SITE LOCATION

The subject property, 3406 72nd Place S.E., is located on the east side of 72nd Place S.E. and just east of S.E. 34th Street. (See Vicinity Map). The site will be developed with the construction of a single family residence with driveway, patio, walkway, and landscaping on the lot.

1.2 EXISTING CONDITIONS

The site is presently developed with a single family residence and a gravel driveway. (See Figure 1.1 Existing Conditions Exhibit).

The lot slopes from the northeast to the southwest property line of the parcel. Slopes vary, but generally are approximately 5 to 6 percent. Soils are Vashon Recessional Outwash material (See Geotechnical Report Appendix A).

Storm runoff will enter the property from the developed adjacent lot to the east by overland flow. No flow will enter from the west, north or the south as contours fall off in those directions.

1.3 DEVELOPED CONDITIONS

Lot development will include removal of existing structure and clearing and grading of the lot for the construction of a new single-family residence, driveway, patio, walkway, and landscaping. The new impervious area of the developed lot is 4,043 sf (See Figure 1.2 Developed Conditions Exhibit).

A storm drainage system was designed and constructed to collect runoff from the impervious areas of the roof, patio, walkway, and driveway with the short plat improvements. Roof runoff will enter gutters and be directed to downspouts connected the existing infiltration system located on the east side of the residence. Driveway runoff will be collected in a driveway drain. Stormwater from downspouts, yard drains and the driveway drains will be conveyed to the infiltration system.

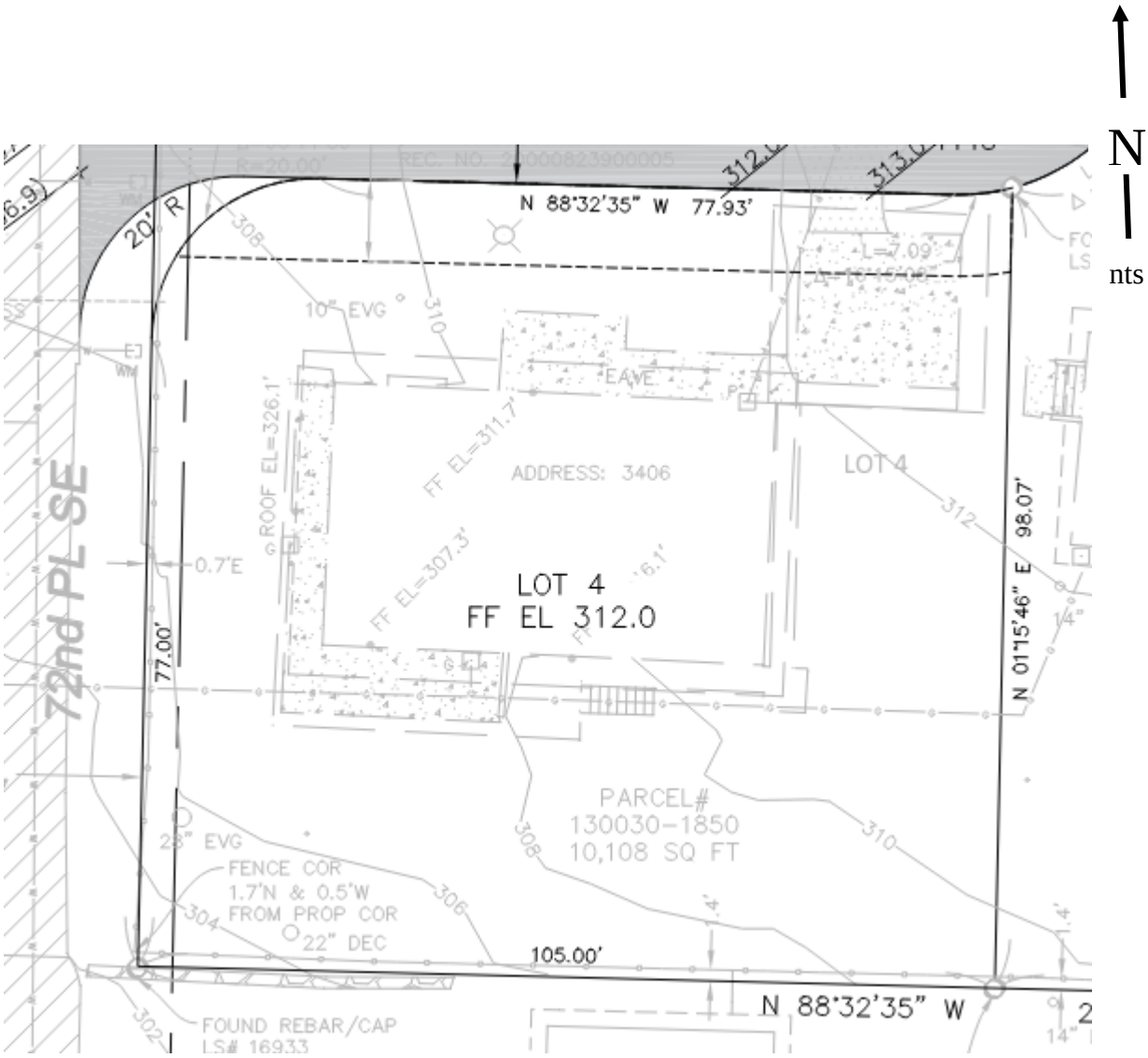

Figure 1.1 Existing Conditions Exhibit

N

nts

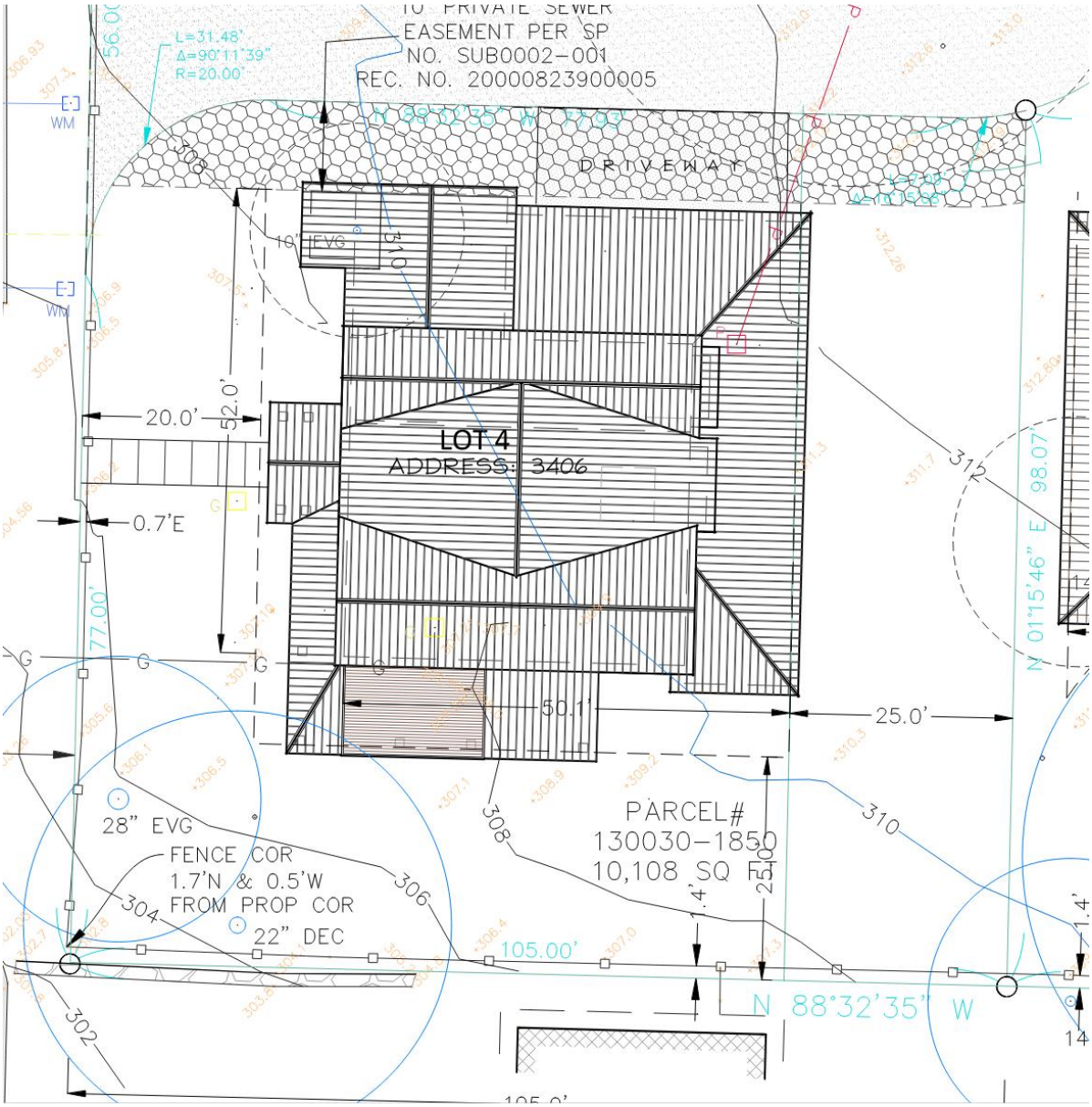

Figure 1.2 Developed Conditions Exhibit

MINIMUM STORMWATER REQUIREMENTS

1.4 MINIMUM REQUIREMENTS (MR)

Lot development will contain 4,043 square feet of new impervious surfaces and therefore the project must comply with minimum requirements MR1 through MR5. (See Figure I-2.4.2)

1.4.1 MR #1 – PREPARATION OF STORMWATER SITE PLANS

A stormwater site plan detailing the collection, conveyance, and discharge of stormwater from the site has been prepared and will be included in the building permit submittal. The stormwater site plan was prepared per the City of Mercer Island Development Services Standards. The infiltration system has been installed with the short plat improvement requirements.

1.4.2 MR #2 – SMALL PROJECT STORMWATER SITE/PLAN REPORT

A Small Project Stormwater Site/Plan Report and a Temporary Erosion Sediment Control Plan have been prepared and will be included in the building permit submittal. The Small Project Stormwater Site/Plan Report addresses the five (5) Minimum Requirements (MR).

1.4.3 MR #3 – SOURCE CONTROL OF POLLUTION

Source control BMP's are included in the SWPP Worksheet and are shown on the Temporary Erosion Sediment Control Plan. The source control BMPs are intended to prevent stormwater from coming in contact with pollutants.

1.4.4 MR #4 – PRESERVATION OF NATURAL DRAINAGE SYSTEMS AND OUTFALLS

The natural drainage direction is to the southwest and then to the storm drain system in 72nd Place SE and has been retained. Discharge leaving the property will enter the 72nd Place SE roadway drainage system which connects to an existing storm drain system in S.E 71st Street with eventual outfall into Lake Washington. A Downstream Level One Analysis was not required for this project as an infiltration system was installed per the short plat requirements.

1.4.5 MR #5 – ONSITE STORMWATER MANAGEMENT

This project triggers Minimum Requirements #1 through #5 and must meet the requirements in Figure I-2.5.1. No low impact development BMPs will be used on this site. The site Geotechnical Report states this site is appropriate for infiltration. (See Appendix A, Geotechnical Report)

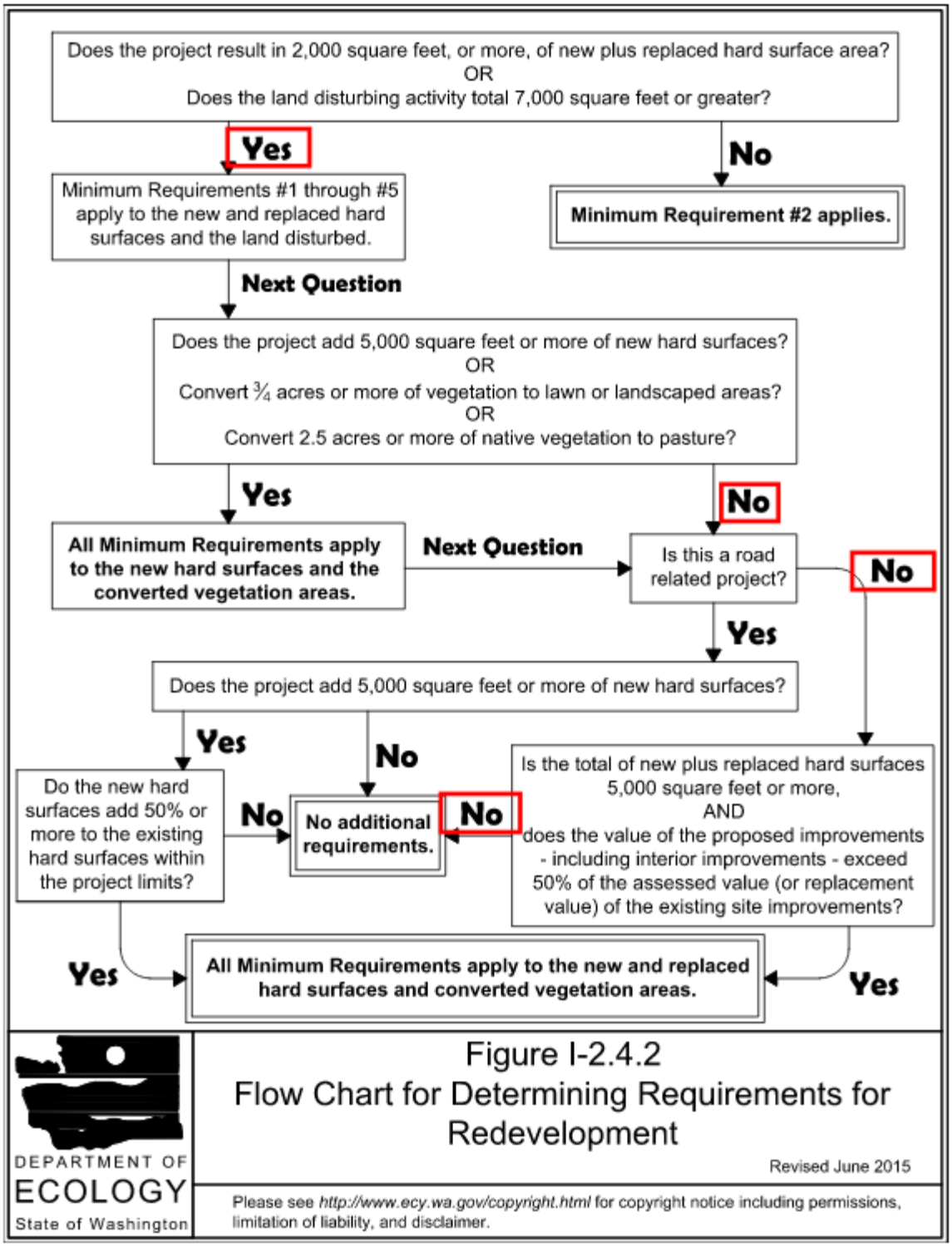
Does the project result in 2,000 square feet, or more, of new plus replaced hard surface area?
OR
Does the land disturbing activity total 7,000 square feet or greater?
Yes
No
Minimum Requirements #1 through #5 apply to the new and replaced hard surfaces and the land disturbed.
Minimum Requirement #2 applies.
Next Question
Does the project add 5,000 square feet or more of new hard surfaces?
OR
Convert ¾ acres or more of vegetation to lawn or landscaped areas?
OR
Convert 2.5 acres or more of native vegetation to pasture?
Yes
No
All Minimum Requirements apply to the new hard surfaces and the converted vegetation areas.
Next Question
Is this a road related project?
No
Yes
Does the project add 5,000 square feet or more of new hard surfaces?
Yes
No
Do the new hard surfaces add 50% or more to the existing hard surfaces within the project limits?
No
No additional requirements.
No
Is the total of new plus replaced hard surfaces 5,000 square feet or more,
AND
does the value of the proposed improvements - including interior improvements - exceed 50% of the assessed value (or replacement value) of the existing site improvements?
Yes
All Minimum Requirements apply to the new and replaced hard surfaces and converted vegetation areas.
Yes
DEPARTMENT OF
ECOLOGY
State of Washington
Figure I-2.4.2
Flow Chart for Determining Requirements for Redevelopment
Revised June 2015
Please see http://www.ecy.wa.gov/copyright.html for copyright notice including permissions, limitation of liability, and disclaimer.

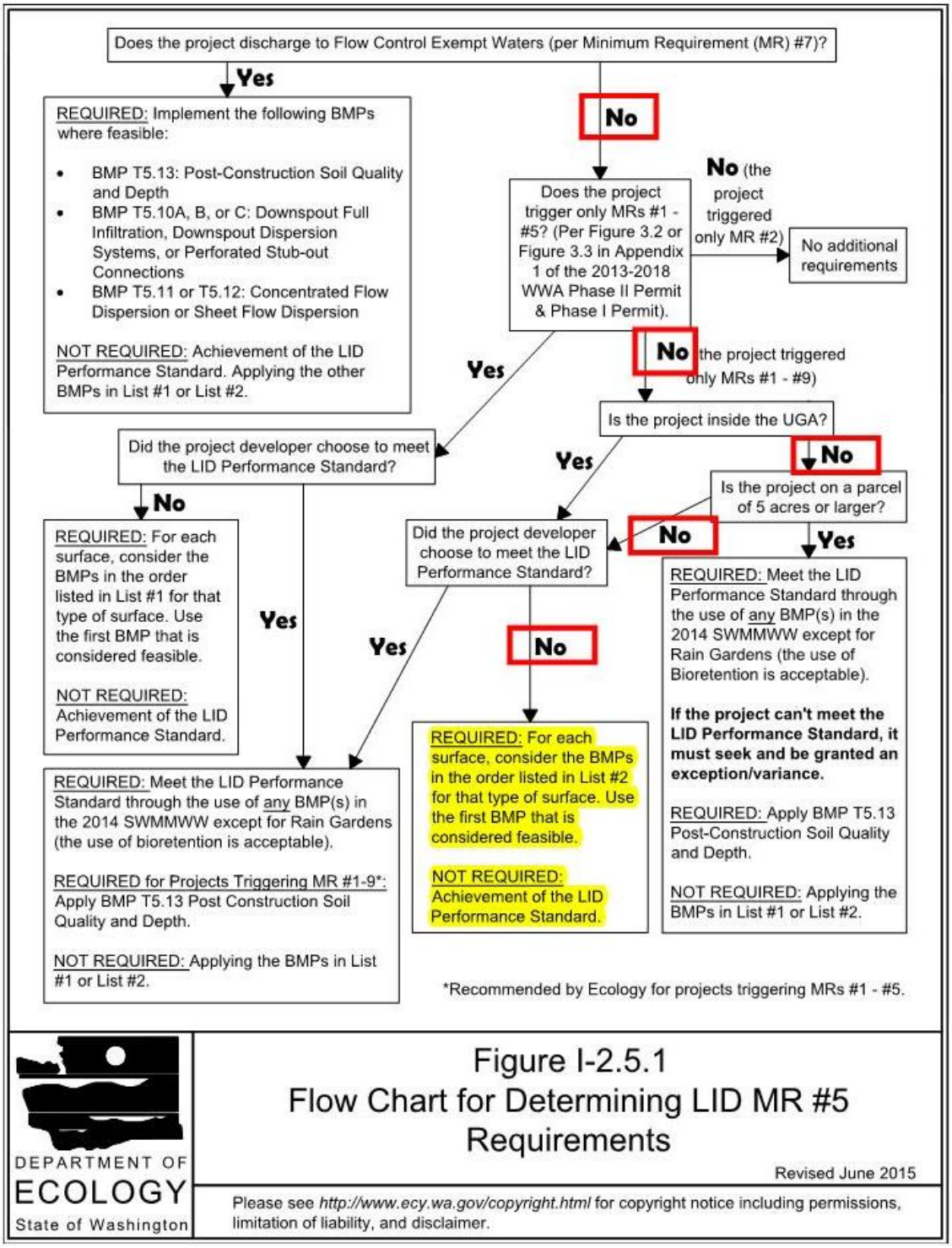
Does the project discharge to Flow Control Exempt Waters (per Minimum Requirement (MR) #7)?
Yes
REQUIRED: Implement the following BMPs where feasible:
• BMP T5.13: Post-Construction Soil Quality and Depth
• BMP T5.10A, B, or C: Downspout Full Infiltration, Downspout Dispersion Systems, or Perforated Stub-out Connections
• BMP T5.11 or T5.12: Concentrated Flow Dispersion or Sheet Flow Dispersion
NOT REQUIRED: Achievement of the LID Performance Standard. Applying the other BMPs in List #1 or List #2.
No
Does the project trigger only MRs #1 - #5? (Per Figure 3.2 or Figure 3.3 in Appendix 1 of the 2013-2018 WWA Phase II Permit & Phase I Permit).
No (the project triggered only MR #2)
No additional requirements
Yes
No (the project triggered only MRs #1 - #9)
Is the project inside the UGA?
Yes
No
Is the project on a parcel of 5 acres or larger?
No
Yes
Did the project developer choose to meet the LID Performance Standard?
No
REQUIRED: For each surface, consider the BMPs in the order listed in List #1 for that type of surface. Use the first BMP that is considered feasible.
NOT REQUIRED: Achievement of the LID Performance Standard.
Yes
Did the project developer choose to meet the LID Performance Standard?
Yes
No
REQUIRED: For each surface, consider the BMPs in the order listed in List #2 for that type of surface. Use the first BMP that is considered feasible.
NOT REQUIRED: Achievement of the LID Performance Standard.
REQUIRED: Meet the LID Performance Standard through the use of any BMP(s) in the 2014 SWMMWW except for Rain Gardens (the use of Bioretention is acceptable).
If the project can't meet the LID Performance Standard, it must seek and be granted an exception/variance.
REQUIRED: Apply BMP T5.13 Post-Construction Soil Quality and Depth.
NOT REQUIRED: Applying the BMPs in List #1 or List #2.
REQUIRED: Meet the LID Performance Standard through the use of any BMP(s) in the 2014 SWMMWW except for Rain Gardens (the use of bioretention is acceptable).
REQUIRED for Projects Triggering MR #1-9*: Apply BMP T5.13 Post Construction Soil Quality and Depth.
NOT REQUIRED: Applying the BMPs in List #1 or List #2.
*Recommended by Ecology for projects triggering MRs #1 - #5.
DEPARTMENT OF ECOLOGY State of Washington
Figure I-2.5.1
Flow Chart for Determining LID MR #5 Requirements
Revised June 2015
Please see http://www.ecy.wa.gov/copyright.html for copyright notice including permissions, limitation of liability, and disclaimer.

ONSITE STORMWATER MANAGEMENT

1.5 TIER 1: MINIMIZE RUNOFF GENERATION

1.5.1 SMART SITE DESIGN

The site development has been laid out to create minimum impact. The total impervious surface area for roof, patio, walk, and driveway is 4,043 square feet.

1.5.2 PRESERVE NATIVE VEGETATION

With the exception of existing trees, there is no significant native vegetation outside the building areas. Selected existing trees will be preserved and maintained during construction.

Lawn and Landscape Areas: The site will provide Post-Construction Soil Quality and Depth in accordance with BMP T5.13 (See the TESC Plan and TESC Detail sheets). The topsoil layer shall have a minimum depth of 8-inches, mulching planting beds shall have 2-inches of organic material. The undisturbed areas will be maintained and protected during construction.

1.5.3 FULL DISPERSION AND FULL INFILTRATION

Full dispersion or infiltration is not feasible per the Geotechnical Report.

The site soil is Vashon Recessional Outwash soil. City mapping shows the site is infeasible for onsite infiltration. The site Geotechnical Report states this site is not appropriate for dispersion. (See Appendix A, Geotechnical Report)

- Full Dispersion is not feasible per the Geotechnical Report.
- Full Infiltration is feasible as the Geotechnical Report has determined the infiltration rate for this lot.
- Rain Gardens: The site is unsuitable suitable for rain gardens as the Geotechnical Report has determined the lots are not feasible for onsite infiltration.
- Downspout Dispersion is not feasible per Geotechnical Report.
- Perforated Stub-out Connection can be utilized the site is infeasible for onsite infiltration.

1.5.4 AMENDED SOILS

Amended soil will be used over the disturbed areas that will be landscaped per Post-Construction Soil Quality and Depth in accordance with BMP T5.13, see the TESC plan and TESC detail sheets.

1.6 TIER 2: RETAIN RUNOFF ON SITE

As discussed in full dispersion above, retention of runoff onsite is not a feasible option.

Infiltration System will be used for this parcel.

Bioretention will not be used for the same reasons listed for the Rain Gardens under Section 1.5.3 above.

Pervious pavement for the driveway will not be used for the same reasons listed above for Perforated Stub-out Connection under Section 1.5.3 above.

Rain Harvesting will not be used.

Vegetated roof is not a practical system due to the roof design and slope.

1.7 TIER 3: INFILTRATE OR DISPERSE RUNOFF PRIOR TO DISCHARGE

As discussed above in Section 1.5.3 dispersion is not feasible on this site per the Geotechnical Report, but infiltration is feasible.

Appendix A: Geotechnical Report

Earth Solutions NW LLC

Geotechnical Engineering, Construction Observation/Testing and Environmental Services

June 3, 2019
ES-6695

RKK Construction, Inc.
3056 – 70th Avenue Southeast
Mercer Island, Washington 98040

Attention: Mr. Jason Koehler

Subject: Infiltration Evaluation
Levenson Property
3404 and 3406 – 72nd Place Southeast
Mercer Island, Washington

Reference: Washington State Department of Ecology
2014 Stormwater Management Manual for Western Washington

Terrane
Topographic & Boundary Survey, dated April 18, 2019

M.A. Jones
Geologic Framework for the Puget Sound aquifer system, Washington and British Columbia, 1999

United States Department of Agriculture
Natural Resources Conservation Service
Online Web Soil Survey (WSS) resource

Dear Mr. Koehler:

As requested, Earth Solutions NW, LLC (ESNW) has prepared this letter for the subject site. Our scope of services included subsurface exploration, infiltration testing, engineering analysis, and preparation of this letter.

Project Description

The subject site is located east of the intersection between Southeast 34th Street and 72nd Place Southeast, in Mercer Island, Washington, as illustrated on the attached Vicinity Map (Plate 1). The site consists of four adjoined residential tax parcels (King County Parcel Nos. 130030-1850, -1851, -1852, and -1853) totaling approximately 0.96 acres of land area. The property is currently developed with two single-family residences, a detached garage, a detached car port, and associated infrastructure improvements. We understand existing structures will be removed, and four new single-family residences and related improvements will be constructed.

1805 - 136th Place N.E., Suite 201 • Bellevue, WA 98005 • (425) 449-4704 • FAX (425) 449-4711

If the design assumptions outlined in this section are incorrect or change, or if construction conditions differ from those encountered during our fieldwork, ESNW should be contacted to review the recommendations and conclusions provided in this letter.

Subsurface Conditions

An ESNW representative observed, logged, and sampled eight test pits excavated across the subject site using a mini-trackhoe and operator provided by the client on May 7th and May 8th, 2019. The approximate locations of the test pits are depicted on Plate 2 (Test Pit Location Plan). Please refer to the attached test pit logs for a more detailed description of subsurface conditions. Representative soil samples collected at the test pit locations were analyzed in accordance with both Unified Soil Classification System (USCS) and United States Department of Agriculture (USDA) methods and procedures.

Topsoil was encountered in the upper approximate 6 to 12 inches of existing grades at the test pit locations, characterized by dark brown color, the presence of fine organic material, and small root intrusions. Surficial fill was encountered at test pit locations TP-2 and TP-5 and was restricted to the topsoil layer. Fill may also be present near existing structural improvements and along drive and access ways within the subject property. Where encountered, fill should be evaluated by ESNW at the time of construction to assess the suitability for use as structural fill and/or foundation support.

Underlying topsoil and fill, native soils primarily consisting of loose to medium dense silty sand with varying amounts of gravel (USCS: SM) were encountered. Underlying the upper silty sand layer, native soils were observed to vary amongst poorly graded sand with varying amounts of gravel, poorly graded sand with silt, poorly graded gravel with sand, poorly graded gravel with silt, well graded gravel with sand, and well graded gravel with silt and sand (USCS: SP, SP-SM, GP, GP-GM, GW, and GW-GM, respectively). The lower sands and gravels were encountered in a medium dense to dense and moist to wet condition. Where encountered, the gravel deposits were observed at depths ranging between three and five feet below existing grades. Intermittent silt lensing was observed in all test pit locations, with exception to test pit locations TP-7 and TP-8, at depths ranging between two and one-half to seven feet bgs.

Geologic Setting

The referenced geologic map resource indicates the subject site and surrounding area are underlain by Vashon till (Qvt). The referenced WSS resource identifies arents of Alderwood material (Map Unit Symbol: AmB) across the site and surrounding areas. "Arents" refers to Alderwood soils that, despite possible historic disturbance from urban development, retain many features of Alderwood soils, which were formed in till plains. Based on the conditions encountered during our subsurface exploration, native site soils are more consistent with the typical make-up of Vashon recessional outwash deposits.

Groundwater

Light groundwater seepage was encountered at test pit location TP-2 at a depth of eight feet bgs and test pit location TP-6 at a depth of six and one-half feet bgs during our May 2019 exploration. It should be noted seepage rates and elevations fluctuate depending on many factors, including precipitation duration and intensity, the time of year, and soil conditions. In general, groundwater flow rates are higher during the wetter, winter months.

Infiltration Evaluation

Our evaluation of the proposed infiltration facilities was completed in general accordance with applicable requirements and procedures of the referenced 2014 Washington State Department of Ecology Stormwater Management Manual for Western Washington (2014 SWMMWW) as adopted by the City of Mercer Island. We understand individual infiltration facilities are proposed for each of the four lots on the property.

In-situ testing was completed in general accordance with the small-scale Pilot Infiltration Test (PIT) procedure, as outlined in Section 3.3.6 of Volume III of the 2014 SWMMWW. To evaluate the infiltration capacity of soils, in-situ testing was completed at TP-1 and TP-2 at a depth of three feet bgs and at TP-5, TP-6, and TP-7 at a depth of five feet bgs. Our testing program consisted of a soak period, steady state period, and falling head period. Due to the soil variability across the property, three separate preliminary infiltration rates were calculated for the predominant soil types observed at the property (silty sand, cleaner sand deposits, and gravels). The table below summarizes the short-term (measured) rate at each test location, in units of inches per hour (iph).

Test Pit	Measured Rate (iph)	Depth (feet)	Soil Type
TP-1, TP-2, & TP-6	1	3	Silty sand (SM)
TP-5	13.5	5	Poorly graded sand with silt (SP-SM)
TP-7	18.5	5	Well graded gravel with sand (GW)

Per the referenced 2014 SWMMWW, correction factors must be applied to the measured rates to account for site variability, testing methods, and influent control to prevent siltation. In our opinion, the following correction factors and calculated total correction factor should be applied to the measured field rates.

- CF_v (site variability; number of tests) 0.33
- CF_t (test method) 0.5
- CF_m (degree of fluent control) 0.9
- CF_t (total correction factor) 0.15

Application of the total correction factor to the measured rates are provided in the table below:

Test Pit	Design Rate (iph)
TP-1, TP-2, & TP-6	0.15
TP-5	2.03
TP-7	2.78

From a geotechnical standpoint, infiltration is feasible within locations underlain by gravels and clean sand deposits. The silty sand deposits identified at the property generally exhibit poor infiltration potential and should not be targeted for infiltration facilities. Minimum vertical separation between the bottoms of the proposed facilities and groundwater must be considered during design. We recommend provisions for overflow be incorporated into final designs, wherever practicable.

Given the variability of the site soils infiltration potential, ESNW should be in correspondence with the facility designer to assist with applying appropriate rates to the targeted infiltrating soils at each proposed lot, acknowledging depth to restrictive layers, and identifying appropriate facility locations per each lot. Additionally, ESNW should be retained at the time of facility construction to confirm soils types and provide additional recommendations as needed.

Limitations

This letter has been prepared for the exclusive use of RKK Construction, Inc. and their representatives. A warranty is neither expressed nor implied. The recommendations and conclusions provided in this letter are professional opinions consistent with the level of care and skill that is typical of other members in the profession currently practicing under similar conditions in this area. Variations in the soil and groundwater conditions encountered at the test pit locations may exist and may not become evident until construction. ESNW should reevaluate the contents of this letter if variations are encountered. ESNW should be retained during construction to observe facility installation and to confirm soil types are as anticipated in this letter. Supplementary recommendations may be provided during construction, as necessary.

RKK Construction, Inc.
June 3, 2019

ES-6695
Page 5

We appreciate the opportunity to be of service to you and trust this letter meets your current needs. Should you have questions, or if additional information is required, please call.

Sincerely,

EARTH SOLUTIONS NW, LLC

RAYMOND A COGLAS
STATE OF WASHINGTON
36018
REGISTERED
PROFESSIONAL ENGINEER
6/3/19

Kyler T. Kelly
Staff Geologist

Raymond A. Coglas, P.E.
Principal Engineer

Attachments: Plate 1 – Vicinity Map
Plate 2 – Test Pit Location Plan
Test Pit Logs
Grain Size Distribution

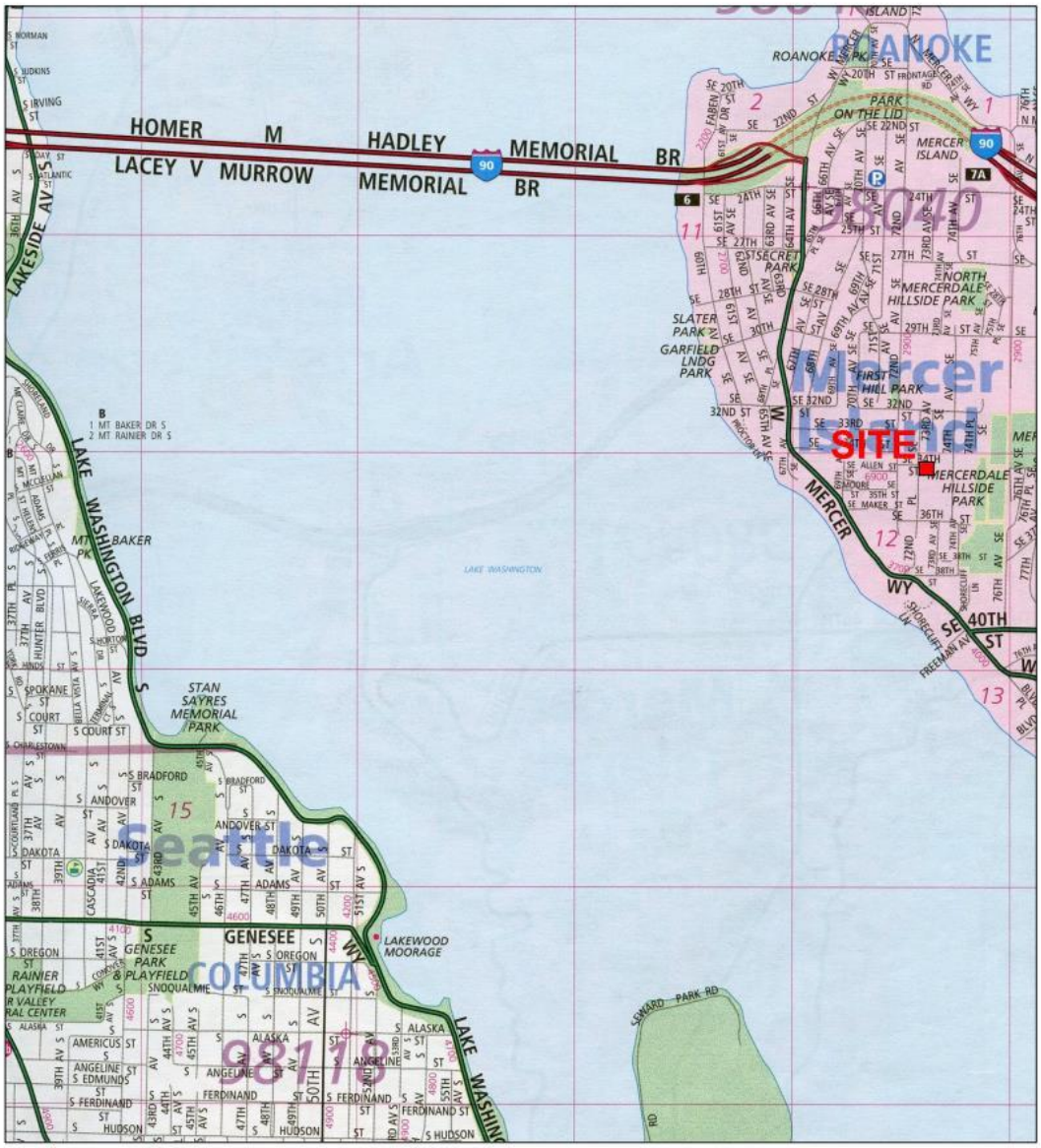

Reference:
King County, Washington
Map 595
By The Thomas Guide
Rand McNally
32nd Edition

NORTH

NOTE: This plate may contain areas of color. ESNW cannot be responsible for any subsequent misinterpretation of the information resulting from black & white reproductions of this plate.

Earth Solutions NW LLC

Geotechnical Engineering, Construction Observation/Testing and Environmental Services

Vicinity Map
Levenson Property
Mercer Island, Washington

Drwn. CAM	Date 05/23/2019	Proj. No. 6695
Checked KTK	Date May 2019	Plate 1

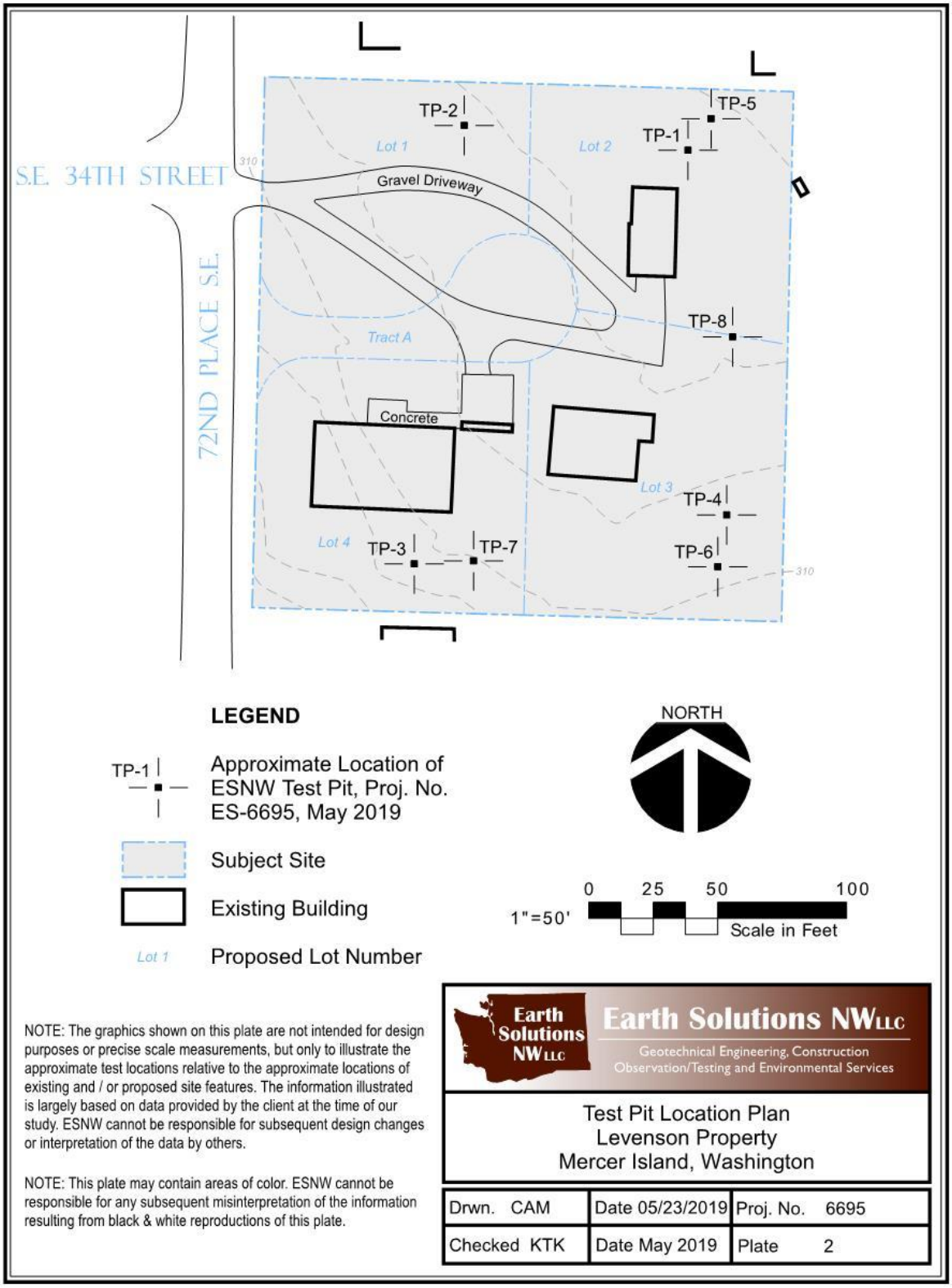

NOTE: The graphics shown on this plate are not intended for design purposes or precise scale measurements, but only to illustrate the approximate test locations relative to the approximate locations of existing and / or proposed site features. The information illustrated is largely based on data provided by the client at the time of our study. ESNW cannot be responsible for subsequent design changes or interpretation of the data by others.

NOTE: This plate may contain areas of color. ESNW cannot be responsible for any subsequent misinterpretation of the information resulting from black & white reproductions of this plate.

Earth Solutions NW LLC

SOIL CLASSIFICATION CHART

MAJOR DIVISIONS			SYMBOLS GRAPH	SYMBOLS LETTER	TYPICAL DESCRIPTIONS
COARSE GRAINED SOILS MORE THAN 50% OF MATERIAL IS LARGER THAN NO. 200 SIEVE SIZE	GRAVEL AND GRAVELLY SOILS MORE THAN 50% OF COARSE FRACTION RETAINED ON NO. 4 SIEVE	CLEAN GRAVELS (LITTLE OR NO FINES)		GW	WELL-GRADED GRAVELS, GRAVEL - SAND MIXTURES, LITTLE OR NO FINES
				GP	POORLY-GRADED GRAVELS, GRAVEL - SAND MIXTURES, LITTLE OR NO FINES
		GRAVELS WITH FINES (APPRECIABLE AMOUNT OF FINES)		GM	SILTY GRAVELS, GRAVEL - SAND - SILT MIXTURES
				GC	CLAYEY GRAVELS, GRAVEL - SAND - CLAY MIXTURES
	SAND AND SANDY SOILS MORE THAN 50% OF COARSE FRACTION PASSING ON NO. 4 SIEVE	CLEAN SANDS (LITTLE OR NO FINES)		SW	WELL-GRADED SANDS, GRAVELLY SANDS, LITTLE OR NO FINES
				SP	POORLY-GRADED SANDS, GRAVELLY SAND, LITTLE OR NO FINES
		SANDS WITH FINES (APPRECIABLE AMOUNT OF FINES)		SM	SILTY SANDS, SAND - SILT MIXTURES
				SC	CLAYEY SANDS, SAND - CLAY MIXTURES
FINE GRAINED SOILS MORE THAN 50% OF MATERIAL IS SMALLER THAN NO. 200 SIEVE SIZE	SILTS AND CLAYS	LIQUID LIMIT LESS THAN 50		ML	INORGANIC SILTS AND VERY FINE SANDS, ROCK FLOUR, SILTY OR CLAYEY FINE SANDS OR CLAYEY SILTS WITH SLIGHT PLASTICITY
				CL	INORGANIC CLAYS OF LOW TO MEDIUM PLASTICITY, GRAVELLY CLAYS, SANDY CLAYS, SILTY CLAYS, LEAN CLAYS
				OL	ORGANIC SILTS AND ORGANIC SILTY CLAYS OF LOW PLASTICITY
	SILTS AND CLAYS	LIQUID LIMIT GREATER THAN 50		MH	INORGANIC SILTS, MICACEOUS OR DIATOMACEOUS FINE SAND OR SILTY SOILS
				CH	INORGANIC CLAYS OF HIGH PLASTICITY
				OH	ORGANIC CLAYS OF MEDIUM TO HIGH PLASTICITY, ORGANIC SILTS
HIGHLY ORGANIC SOILS				PT	PEAT, HUMUS, SWAMP SOILS WITH HIGH ORGANIC CONTENTS

DUAL SYMBOLS are used to indicate borderline soil classifications.

The discussion in the text of this report is necessary for a proper understanding of the nature of the material presented in the attached logs.

Earth Solutions NW
1805 - 136th Place N.E., Suite 201
Bellevue, Washington 98005
Telephone: 425-449-4704
Fax: 425-449-4711

TEST PIT NUMBER TP-1

PAGE 1 OF 1

PROJECT NUMBER ES-6695 **PROJECT NAME** Levenson Property

DATE STARTED 5/7/19 **COMPLETED** 5/7/19 **GROUND ELEVATION** 315 ft **TEST PIT SIZE**

EXCAVATION CONTRACTOR RKK Construction, Inc. **GROUND WATER LEVELS:**

EXCAVATION METHOD **AT TIME OF EXCAVATION** ---

LOGGED BY KTK **CHECKED BY** HTW **AT END OF EXCAVATION** ---

NOTES Depth of Topsoil & Sod 12": grass **AFTER EXCAVATION** ---

DEPTH (ft)	SAMPLE TYPE NUMBER	TESTS	U.S.C.S.	GRAPHIC LOG	MATERIAL DESCRIPTION	
0			TPSL		Dark brown TOPSOIL, trace roots to 2'	
				1.0		314.0
		MC = 11.20%	SM		Brown silty SAND, loose, moist	
		MC = 12.10% Fines = 20.60%			-becomes medium dense -infiltration test at 3', caving to BOH [USDA Classification: slightly gravelly loamy SAND]	
				4.0		311.0
5		MC = 11.60%	SP-SM		Brown poorly graded SAND with silt, medium dense, wet -intermittent silt lenses from 4' to 6' -small root intrusions	
		MC = 17.80% Fines = 9.20%		8.5	[USDA Classification: slightly gravelly SAND]	306.5
					Test pit terminated at 8.5 feet below existing grade. No groundwater encountered during excavation. Caving observed from 3.0 feet to BOH. Bottom of test pit at 8.5 feet.	

GENERAL BH / TP / WELL 6695.GPJ GINT US GDT 5/24/19

Earth Solutions NW
1805 - 136th Place N.E., Suite 201
Bellevue, Washington 98005
Telephone: 425-449-4704
Fax: 425-449-4711

TEST PIT NUMBER TP-2

PAGE 1 OF 1

PROJECT NUMBER ES-6695 **PROJECT NAME** Levenson Property

DATE STARTED 5/7/19 **COMPLETED** 5/7/19 **GROUND ELEVATION** 314 ft **TEST PIT SIZE**

EXCAVATION CONTRACTOR RKK Construction, Inc. **GROUND WATER LEVELS:**

EXCAVATION METHOD **AT TIME OF EXCAVATION** ---

LOGGED BY KTK **CHECKED BY** HTW **AT END OF EXCAVATION** ---

NOTES Depth of Topsoil & Sod 6"-12": grass **AFTER EXCAVATION** ---

DEPTH (ft)	SAMPLE TYPE NUMBER	TESTS	U.S.C.S.	GRAPHIC LOG	MATERIAL DESCRIPTION	
0			TPSL		Dark brown TOPSOIL, trace roots to 2.5' (Fill) -ceramic debris	313.0
				1.0		
			SM		Brown silty SAND, loose, moist -becomes medium dense -infiltration test at 3' [USDA Classification: slightly gravelly sandy LOAM]	310.0
		MC = 14.80% Fines = 41.20%		4.0		
5		MC = 15.60%	SP-SM		Brown poorly graded SAND with silt, medium dense, wet -intermittent silt lenses from 4' to 7' -small root intrusions -minor caving to BOH -small root intrusions	306.0
		MC = 17.40%		8.0		
		MC = 9.60% Fines = 3.20%	SP	9.0	Brown poorly graded SAND with gravel, dense, saturated -light groundwater seepage at 8' [USDA Classification: extremely gravelly coarse SAND]	305.0

Test pit terminated at 9.0 feet below existing grade. Groundwater seepage encountered at 8.0 feet during excavation. Caving observed from 6.0 feet to BOH.
Bottom of test pit at 9.0 feet.

GENERAL BH / TP / WELL 6695.GPJ GINT US GDT 5/24/19

Earth Solutions NW
1805 - 136th Place N.E., Suite 201
Bellevue, Washington 98005
Telephone: 425-449-4704
Fax: 425-449-4711

TEST PIT NUMBER TP-3

PAGE 1 OF 1

PROJECT NUMBER ES-6695 **PROJECT NAME** Levenson Property

DATE STARTED 5/8/19 **COMPLETED** 5/8/19 **GROUND ELEVATION** 309 ft **TEST PIT SIZE**

EXCAVATION CONTRACTOR RKK Construction, Inc. **GROUND WATER LEVELS:**

EXCAVATION METHOD **AT TIME OF EXCAVATION** ---

LOGGED BY KTK **CHECKED BY** HTW **AT END OF EXCAVATION** ---

NOTES Depth of Topsoil & Sod 6"-12": grass **AFTER EXCAVATION** ---

DEPTH (ft)	SAMPLE TYPE NUMBER	TESTS	U.S.C.S.	GRAPHIC LOG	MATERIAL DESCRIPTION	
0						
			TPSL		Dark brown TOPSOIL, trace roots to BOH	
				1.0		308.0
		MC = 11.90%	SM		Brown silty SAND, medium dense, moist -increased gravel content -intermittent silt lenses to 6'	
5				5.0		304.0
		MC = 7.60%	GP-GM		Gray poorly graded GRAVEL with silt, dense, moist -caving from 5' to BOH	
				6.5		302.5
		MC = 4.30%	GP		Gray poorly graded GRAVEL with sand, dense, moist	
		MC = 5.40%		8.5		300.5
					Test pit terminated at 8.5 feet below existing grade. No groundwater encountered during excavation. Caving observed from 5.0 feet to BOH. Bottom of test pit at 8.5 feet.	

GENERAL BH / TP / WELL 6695.GPJ GINT US.GDT 5/24/19

Earth Solutions NW
1805 - 136th Place N.E., Suite 201
Bellevue, Washington 98005
Telephone: 425-449-4704
Fax: 425-449-4711

TEST PIT NUMBER TP-4

PAGE 1 OF 1

PROJECT NUMBER ES-6695 **PROJECT NAME** Levenson Property

DATE STARTED 5/8/19 **COMPLETED** 5/8/19 **GROUND ELEVATION** 312 ft **TEST PIT SIZE**

EXCAVATION CONTRACTOR RKK Construction, Inc. **GROUND WATER LEVELS:**

EXCAVATION METHOD **AT TIME OF EXCAVATION** ---

LOGGED BY KTK **CHECKED BY** HTW **AT END OF EXCAVATION** ---

NOTES Depth of Topsoil & Sod 12": grass **AFTER EXCAVATION** ---

DEPTH (ft)	SAMPLE TYPE NUMBER	TESTS	U.S.C.S.	GRAPHIC LOG	MATERIAL DESCRIPTION	
0			TPSL		Dark brown TOPSOIL, trace roots to 6'	
				1.0		311.0
		MC = 8.70%	SM		Brown silty SAND, medium dense, moist -becomes dense, intermittent silt lenses to 6' -increased gravel content	
				3.5		308.5
		MC = 6.90%	GP		Brown poorly graded GRAVEL with sand, dense, moist -minor caving to BOH	
5						
		MC = 7.80%		7.0		305.0
			SP		Gray poorly graded SAND with gravel, dense, moist	
		MC = 13.00%		8.5		303.5

Test pit terminated at 8.5 feet below existing grade. No groundwater encountered during excavation. Caving observed from 5.0 feet to BOH.

Bottom of test pit at 8.5 feet.

GENERAL BH / TP / WELL 6695.GPJ GINT US.GDT 5/24/19

Earth Solutions NW
1805 - 136th Place N.E., Suite 201
Bellevue, Washington 98005
Telephone: 425-449-4704
Fax: 425-449-4711

TEST PIT NUMBER TP-5

PAGE 1 OF 1

PROJECT NUMBER ES-6695 **PROJECT NAME** Levenson Property

DATE STARTED 5/8/19 **COMPLETED** 5/8/19 **GROUND ELEVATION** 316 ft **TEST PIT SIZE**

EXCAVATION CONTRACTOR RKK Construction, Inc. **GROUND WATER LEVELS:**

EXCAVATION METHOD **AT TIME OF EXCAVATION** ---

LOGGED BY KTK **CHECKED BY** HTW **AT END OF EXCAVATION** ---

NOTES Depth of Topsoil & Sod 12": grass **AFTER EXCAVATION** ---

DEPTH (ft)	SAMPLE TYPE NUMBER	TESTS	U.S.C.S.	GRAPHIC LOG	MATERIAL DESCRIPTION	
0						
			TPSL		Dark brown TOPSOIL, trace roots to BOH (Fill)	
				1.0	-plastic debris	315.0
			SM		Brown silty SAND with gravel, medium dense, moist	
		MC = 14.00%			-intermittent silt lenses to 6'	
				4.0	-becomes dense	312.0
			SP-SM		Brown poorly graded SAND with silt, dense, moist	
5		MC = 9.20% Fines = 8.20%			-infiltration test at 5' [USDA Classification: slightly gravelly SAND]	
		MC = 11.70%				
		MC = 11.80% Fines = 9.30%		8.5	[USDA Classification: slightly gravelly coarse SAND]	307.5
					Test pit terminated at 8.5 feet below existing grade. No groundwater encountered during excavation. No caving observed. Bottom of test pit at 8.5 feet.	

GENERAL BH / TP / WELL 6695.GPJ GINT US.GDT 5/24/19

Earth Solutions NW
1805 - 136th Place N.E., Suite 201
Bellevue, Washington 98005
Telephone: 425-449-4704
Fax: 425-449-4711

TEST PIT NUMBER TP-6

PAGE 1 OF 1

PROJECT NUMBER ES-6695 **PROJECT NAME** Levenson Property

DATE STARTED 5/8/19 **COMPLETED** 5/8/19 **GROUND ELEVATION** 310 ft **TEST PIT SIZE**

EXCAVATION CONTRACTOR RKK Construction, Inc. **GROUND WATER LEVELS:**

EXCAVATION METHOD **AT TIME OF EXCAVATION** ---

LOGGED BY KTK **CHECKED BY** HTW **AT END OF EXCAVATION** ---

NOTES Depth of Topsoil & Sod 12": grass **AFTER EXCAVATION** ---

DEPTH (ft)	SAMPLE TYPE NUMBER	TESTS	U.S.C.S.	GRAPHIC LOG	MATERIAL DESCRIPTION	
0			TPSL		Dark brown TOPSOIL, trace roots to 7.5'	
				1.0		309.0
			SM		Brown silty SAND, medium dense, moist	
		MC = 14.90%			-becomes dense, intermittent silt lenses to 6.5'	
5		MC = 17.40% Fines = 20.30%			[USDA Classification: slightly gravelly loamy SAND] -infiltration test at 5' -becomes wet	
		MC = 20.30%			-minor caving to BOH	
		MC = 17.40%			-light groundwater seepage	
		MC = 19.90% Fines = 19.10%		8.5	[USDA Classification: slightly gravelly loamy SAND]	301.5

Test pit terminated at 8.5 feet below existing grade. Groundwater seepage encountered at 6.5 feet during excavation. Caving observed from 6.0 feet to BOH.
Bottom of test pit at 8.5 feet.

GENERAL BH / TP / WELL 6695.GPJ GINT US.GDT 5/30/19

Earth Solutions NW
1805 - 136th Place N.E., Suite 201
Bellevue, Washington 98005
Telephone: 425-449-4704
Fax: 425-449-4711

TEST PIT NUMBER TP-7

PAGE 1 OF 1

PROJECT NUMBER ES-6695 **PROJECT NAME** Levenson Property

DATE STARTED 5/8/19 **COMPLETED** 5/8/19 **GROUND ELEVATION** 310 ft **TEST PIT SIZE**

EXCAVATION CONTRACTOR RKK Construction, Inc. **GROUND WATER LEVELS:**

EXCAVATION METHOD **AT TIME OF EXCAVATION** ---

LOGGED BY KTK **CHECKED BY** HTW **AT END OF EXCAVATION** ---

NOTES Depth of Topsoil & Sod 12": grass **AFTER EXCAVATION** ---

DEPTH (ft)	SAMPLE TYPE NUMBER	TESTS	U.S.C.S.	GRAPHIC LOG	MATERIAL DESCRIPTION	
0			TPSL		Dark brown TOPSOIL, trace roots to 7'	
				1.0		309.0
			SM		Brown silty SAND with gravel, medium dense, moist	
				2.5		307.5
		MC = 8.10%	SP-SM		Brown poorly graded SAND with silt, medium dense, moist	
				3.5		306.5
			GW		Brown well-graded GRAVEL with sand, dense, moist	
5		MC = 5.70% Fines = 4.80%			-infiltration test at 5' [USDA Classification: extremely gravelly loamy coarse SAND]	
		MC = 7.90%		6.0		304.0
			GP		Brown poorly graded GRAVEL with sand, dense, moist -moderate caving to BOH	
		MC = 9.50% Fines = 3.10%		8.0	[USDA Classification: extremely gravelly coarse SAND]	302.0

Test pit terminated at 8.0 feet below existing grade. No groundwater encountered during excavation. Caving observed from 7.0 feet to BOH.

Bottom of test pit at 8.0 feet.

GENERAL BH / TP / WELL 6695.GPJ GINT US.GDT 5/24/19

Earth Solutions NW
1805 - 136th Place N.E., Suite 201
Bellevue, Washington 98005
Telephone: 425-449-4704
Fax: 425-449-4711

TEST PIT NUMBER TP-8

PAGE 1 OF 1

PROJECT NUMBER ES-6695 **PROJECT NAME** Levenson Property

DATE STARTED 5/8/19 **COMPLETED** 5/8/19 **GROUND ELEVATION** 314 ft **TEST PIT SIZE**

EXCAVATION CONTRACTOR RKK Construction, Inc. **GROUND WATER LEVELS:**

EXCAVATION METHOD **AT TIME OF EXCAVATION** ---

LOGGED BY KTK **CHECKED BY** HTW **AT END OF EXCAVATION** ---

NOTES Depth of Topsoil & Sod 6": grass **AFTER EXCAVATION** ---

DEPTH (ft)	SAMPLE TYPE NUMBER	TESTS	U.S.C.S.	GRAPHIC LOG	MATERIAL DESCRIPTION	
0			TPSL	0.5	Dark brown TOPSOIL, trace roots to BOH	313.5
			SM	3.0	Brown silty SAND with gravel, medium dense, moist	311.0
		MC = 5.40% Fines = 9.30%	GW-GM	6.0	Brown well-graded GRAVEL with silt and sand, dense, moist -moderate caving from 3' to BOH [USDA Classification: very gravelly loamy coarse SAND] -increased gravel and cobble size	308.0
5		MC = 3.10%			Test pit terminated at 6.0 feet below existing grade due to caving. No groundwater encountered during excavation. Caving observed from 3.0 feet to BOH. Bottom of test pit at 6.0 feet.	

GENERAL BH / TP / WELL 6695.GPJ GINT US.GDT 5/24/19

Earth Solutions NW
1805 - 136th Place N.E., Suite 201
Bellevue, Washington 98005
Telephone: 425-449-4704
Fax: 425-449-4711

GRAIN SIZE DISTRIBUTION

PROJECT NUMBER ES-6695 **PROJECT NAME** Levenson Property

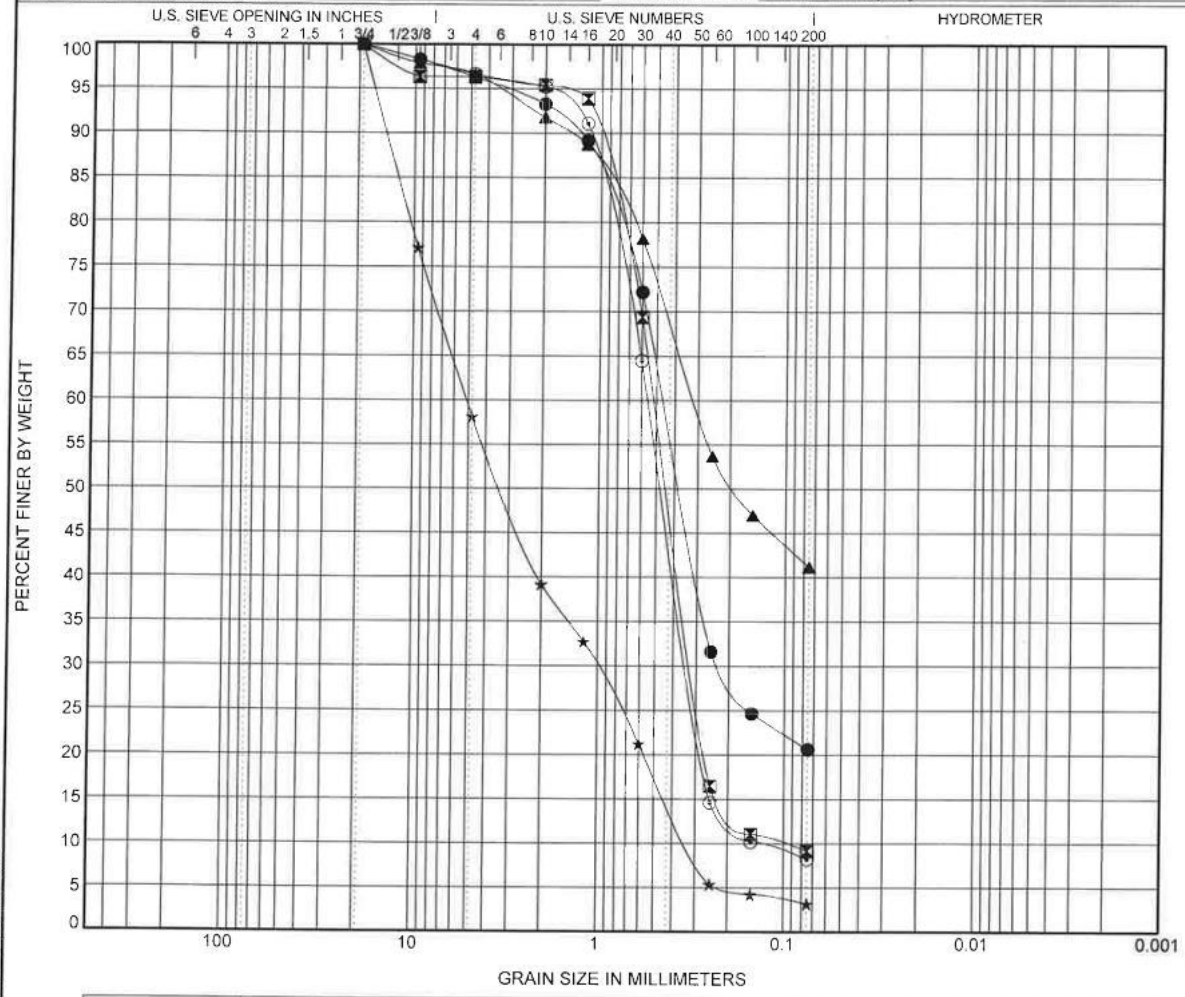

COBBLES	GRAVEL		SAND			SILT OR CLAY
	coarse	fine	coarse	medium	fine	

	Specimen Identification		Classification	Cc	Cu
●	TP-01	3.0ft.	USDA: Brown Slightly Gravelly Loamy Sand. USCS: SM.		
⧓	TP-01	8.5ft.	USDA: Brown Slightly Gravelly Sand. USCS: SP-SM.	1.88	5.07
▲	TP-02	3.0ft.	USDA: Brown Slightly Gravelly Sandy Loam. USCS: SM.		
★	TP-02	9.0ft.	USDA: Brown Extremely Gravelly Coarse Sand. USCS: SP with Gravel.	0.61	15.75
⊙	TP-05	5.0ft.	USDA: Brown Slightly Gravelly Sand. USCS: SP-SM.	1.36	3.92

	Specimen Identification		D100	D90	D60	D30	D10	LL	PL	PI	%Silt	%Clay
●	TP-01	3.0ft.	19	1.315	0.461	0.222					20.6	
⧓	TP-01	8.5ft.	19	1.059	0.514	0.313	0.101				9.2	
▲	TP-02	3.0ft.	19	1.479	0.313						41.2	
★	TP-02	9.0ft.	19	14.034	5.088	1.004	0.323				3.2	
⊙	TP-05	5.0ft.	19	1.148	0.555	0.328	0.142				8.2	

GRAIN SIZE USDA WITH D90 ES-6695 LEVENSON PROPERTY.GPJ GINT US LAB.GDT 5/15/19

Earth Solutions NW
1805 - 136th Place N.E., Suite 201
Bellevue, Washington 98005
Telephone: 425-449-4704
Fax: 425-449-4711

GRAIN SIZE DISTRIBUTION

PROJECT NUMBER ES-6695 **PROJECT NAME** Levenson Property

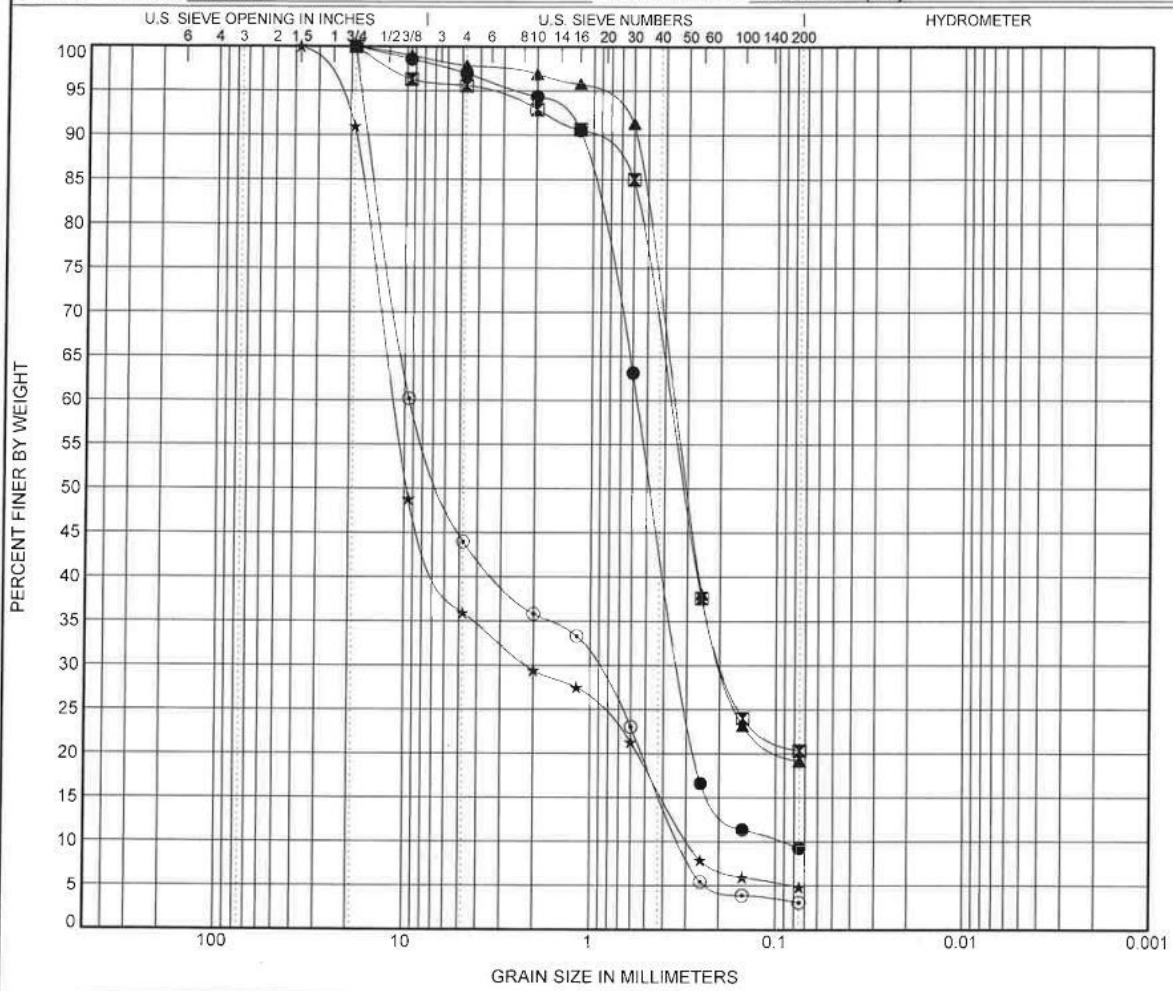

COBBLES	GRAVEL		SAND			SILT OR CLAY
	coarse	fine	coarse	medium	fine	

	Specimen Identification		Classification	Cc	Cu
●	TP-05	8.5ft.	USDA: Brown Slightly Gravelly Coarse Sand. USCS: SP-SM.	1.92	5.93
⧗	TP-06	5.0ft.	USDA: Brown Slightly Gravelly Loamy Sand. USCS: SM.		
▲	TP-06	8.5ft.	USDA: Brown Slightly Gravelly Loamy Sand. USCS: SM.		
★	TP-07	5.0ft.	USDA: Brown Extremely Gravelly Loamy Coarse Sand. USCS: GW with Sand.	1.42	39.82
⊙	TP-07	8.0ft.	USDA: Brown Extremely Gravelly Coarse Sand. USCS: GP with Sand.	0.31	30.04

	Specimen Identification		D100	D90	D60	D30	D10	LL	PL	PI	%Silt	%Clay
●	TP-05	8.5ft.	19	1.165	0.566	0.322	0.095				9.3	
⧗	TP-06	5.0ft.	19	1.092	0.378	0.188					20.3	
▲	TP-06	8.5ft.	19	0.587	0.359	0.19					19.1	
★	TP-07	5.0ft.	37.5	18.701	11.422	2.161	0.287				4.8	
⊙	TP-07	8.0ft.	19	15.964	9.423	0.949	0.314				3.1	

GRAIN SIZE USDA WITH D90 ES-6695 LEVENSON PROPERTY.GPJ GINT US LAB.GDT 5/15/19

Earth Solutions NW
1805 - 136th Place N.E., Suite 201
Bellevue, Washington 98005
Telephone: 425-449-4704
Fax: 425-449-4711

GRAIN SIZE DISTRIBUTION

PROJECT NUMBER ES-6695 PROJECT NAME Levenson Property

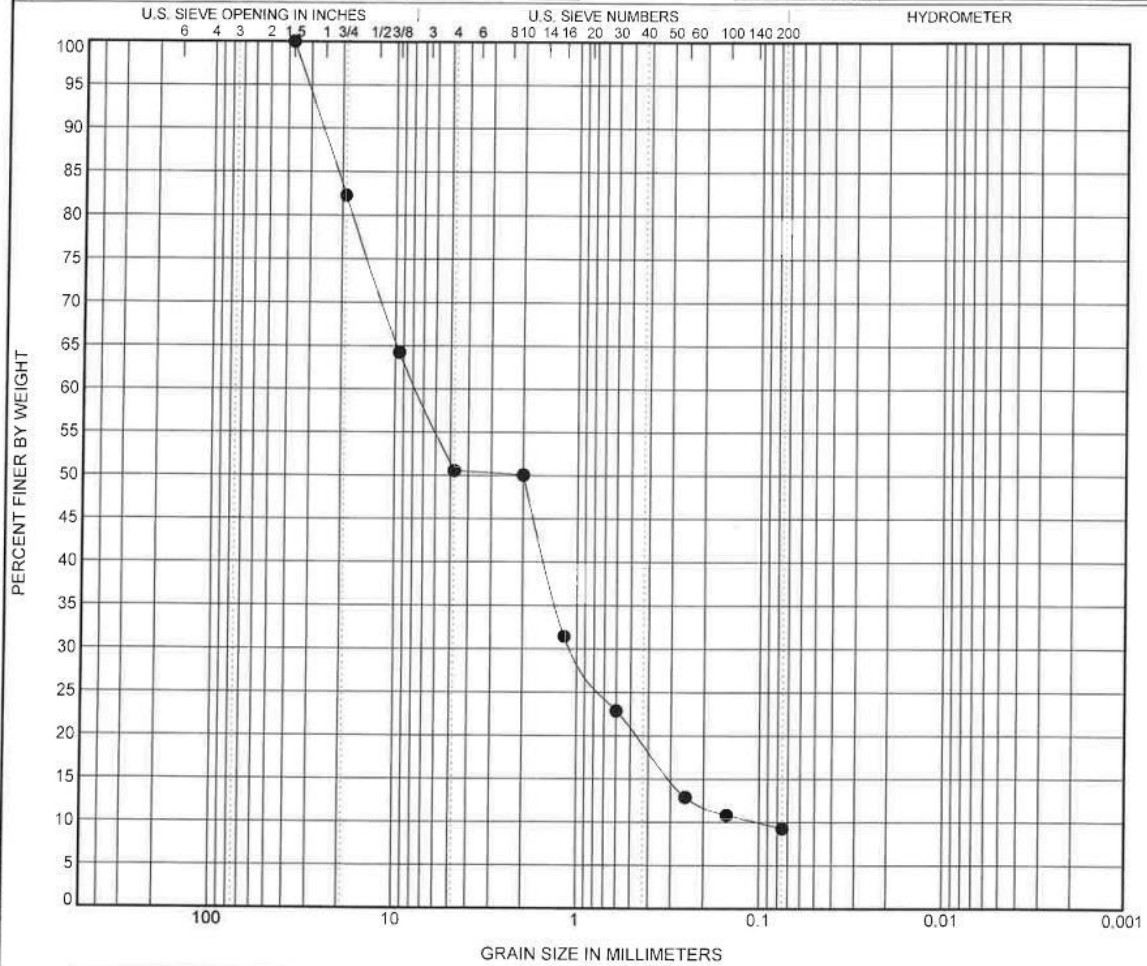

COBBLES	GRAVEL		SAND			SILT OR CLAY
	coarse	fine	coarse	medium	fine	

Specimen Identification		Classification	Cc	Cu
● TP-08	3.0ft.	**USDA: Brown Very Gravelly Loamy Coarse Sand. USCS: GW-GM with Sand.**	**1.39**	**73.65**

Specimen Identification		D100	D90	D60	D30	D10	LL	PL	PI	%Silt	%Clay
● TP-08	3.0ft.	**37.5**	**25.561**	**7.666**	**1.055**	**0.104**				**9.3**	

GRAIN SIZE USDA WITH D60 ES-6695 LEVENSON PROPERTY.GPJ GINT US LAB.GDT 5/15/19

Appendix B: Inflitration Design

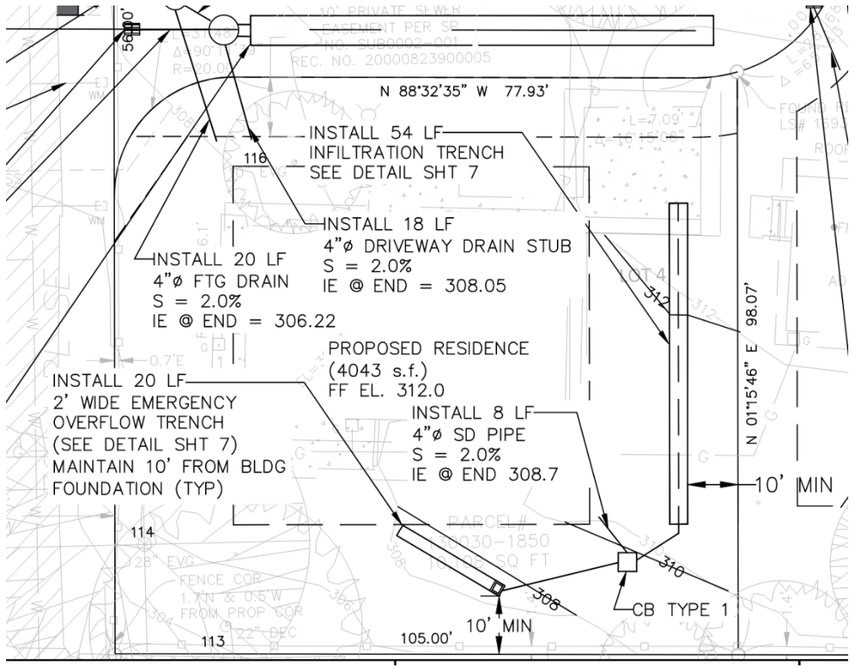

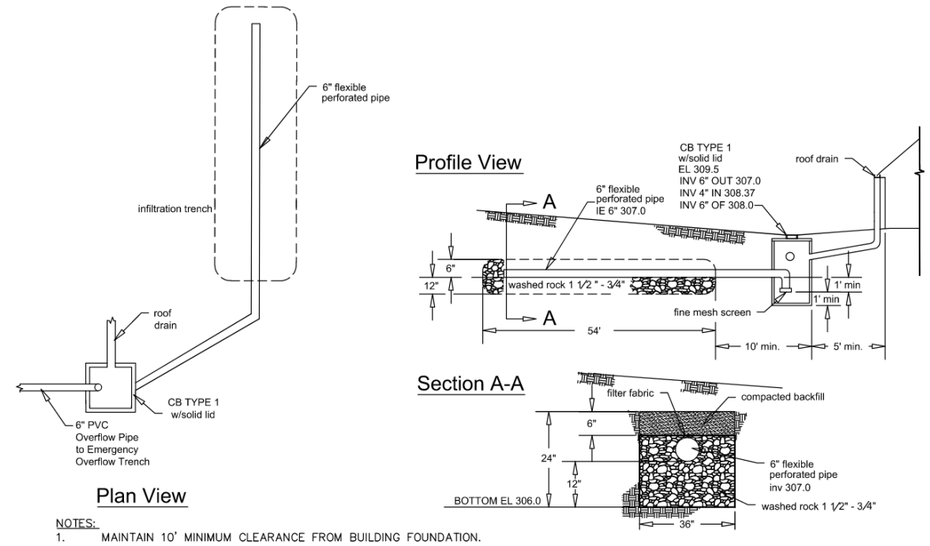

NOTES:
1. MAINTAIN 10' MINIMUM CLEARANCE FROM BUILDING FOUNDATION.

INFILTRATION TRENCH DETAIL
NTS

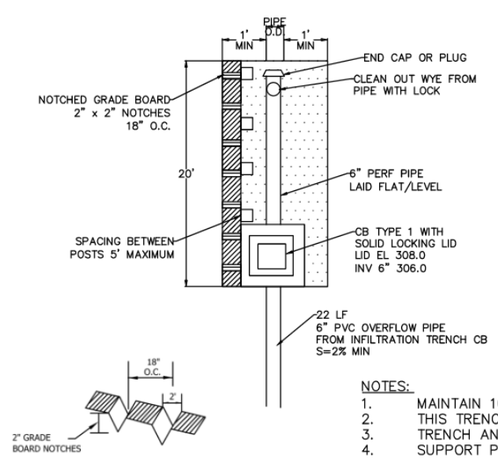

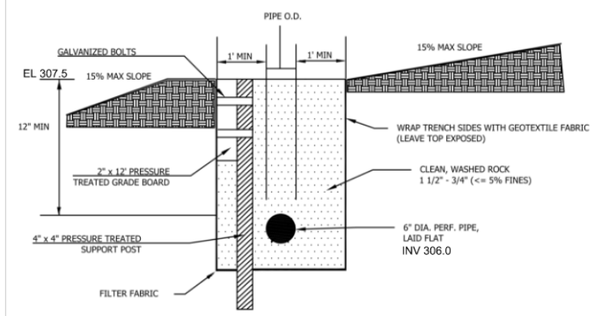

SECTION A-A
NOT TO SCALE

NOTES:
1. MAINTAIN 10' MINIMUM CLEARANCE FROM BUILDING FOUNDATION.
2. THIS TRENCH SHALL BE CONSTRUCTED SO AS TO PREVENT POINT DISCHARGE AND EROSION.
3. TRENCH AND GRADE BOARD MUST BE LEVEL. ALIGN TO FOLLOW CONTOURS OF SITE.
4. SUPPORT POST SPACING AS REQUIRED BY SOIL CONDITIONS TO ENSURE GRADE BOARD REMAINS LEVEL.
4 CB AND CLEAN OUT MUST BE 6" ABOVE THE TOP OF THE DISPERSION TRENCH.

EMERGENCY OVERFLOW TRENCH DETAIL
NTS

Appendix C: Operations and Maintenance Manual

Table V-4.5.2(16) Maintenance Standards - Oil/Water Separators

Maintenance Component	Defect	Condition When Maintenance is Needed	Results Expected When Maintenance is Performed
General	Monitoring	Inspection of discharge water for obvious signs of poor water quality.	Effluent discharge from vault should be clear with out thick visible sheen.
	Sediment Accumulation	Sediment depth in bottom of vault exceeds 6-inches in depth.	No sediment deposits on vault bottom that would impede flow through the vault and reduce separation efficiency.
	Trash and Debris Accumulation	Trash and debris accumulation in vault, or pipe inlet/outlet, floatables and non-floatables.	Trash and debris removed from vault, and inlet/outlet piping.
	Oil Accumulation	Oil accumulations that exceed 1-inch, at the surface of the water.	Extract oil from vault by vactoring. Disposal in accordance with state and local rules and regulations.

Maintenance Component	Defect	Condition When Maintenance is Needed	Results Expected When Maintenance is Performed
	Damaged Pipes	Inlet or outlet piping damaged or broken and in need of repair.	Pipe repaired or replaced.
	Access Cover Damaged/Not Working	Cover cannot be opened, corrosion/deformation of cover.	Cover repaired to proper working specifications or replaced.
	Vault Structure Damage - Includes Cracks in Walls Bottom, Damage to Frame and/or Top Slab	See "Catch Basins" (No. 5) Cracks wider than 1/2-inch at the joint of any inlet/outlet pipe or evidence of soil particles entering through the cracks.	Vault replaced or repairs made so that vault meets design specifications and is structurally sound. Vault repaired so that no cracks exist wider than 1/4-inch at the joint of the inlet/outlet pipe.

Table V-4.5.2(5) Maintenance Standards - Catch Basins

Maintenance Component	Defect	Conditions When Maintenance is Needed	Results Expected When Maintenance is performed
General	Trash & Debris	Trash or debris which is located immediately in front of the catch basin opening or is blocking inletting capacity of the basin by more than 10%. Trash or debris (in the basin) that exceeds 60 percent of the sump depth as measured from the bottom of basin to invert of the lowest pipe into or out of the basin, but in no case less than a minimum of six inches clearance from the debris surface to the invert of the lowest pipe. Trash or debris in any inlet or outlet pipe blocking more than 1/3 of its height. Dead animals or vegetation that could generate odors that could cause complaints or dangerous gases (e.g., methane).	No Trash or debris located immediately in front of catch basin or on grate opening. No trash or debris in the catch basin. Inlet and outlet pipes free of trash or debris. No dead animals or vegetation present within the catch basin.
	Sediment	Sediment (in the basin) that exceeds 60 percent of the sump depth as measured from the bottom of basin to invert of the lowest pipe into or out of the basin, but in no case less than a minimum of 6 inches clearance from the sediment surface to the invert of the lowest pipe.	No sediment in the catch basin
	Structure Damage to Frame and/or Top Slab	Top slab has holes larger than 2 square inches or cracks wider than 1/4 inch. (Intent is to make sure no material is running into basin).	Top slab is free of holes and cracks. Frame is sit-

2014 Stormwater Management Manual for Western Washington

Volume V - Chapter 4 - Page 838

Table V-4.5.2(5) Maintenance Standards - Catch Basins (continued)

Maintenance Component	Defect	Conditions When Maintenance is Needed	Results Expected When Maintenance is performed
		Frame not sitting flush on top slab, i.e., separation of more than 3/4 inch of the frame from the top slab. Frame not securely attached	ting flush on the riser rings or top slab and firmly attached.
	Fractures or Cracks in Basin Walls/ Bottom	Maintenance person judges that structure is unsound. Grout fillet has separated or cracked wider than 1/2 inch and longer than 1 foot at the joint of any inlet/outlet pipe or any evidence of soil particles entering catch basin through cracks.	Basin replaced or repaired to design standards. Pipe is regrouted and secure at basin wall.
	Settlement/ Misalignment	If failure of basin has created a safety, function, or design problem.	Basin replaced or repaired to design standards.
	Vegetation	Vegetation growing across and blocking more than 10% of the basin opening. Vegetation growing in inlet/outlet pipe joints that is more than six inches tall and less than six inches apart.	No vegetation blocking opening to basin. No vegetation or root growth present.
	Contamination and Pollution	See "Detention Ponds" (No. 1).	No pollution present.
Catch Basin Cover	Cover Not in Place	Cover is missing or only partially in place. Any open catch basin requires maintenance.	Catch basin cover is closed
	Locking Mechanism Not	Mechanism cannot be opened by one maintenance person with proper tools. Bolts into	Mechanism opens with

Appendix D: Downstream Level One Analysis

NOT REQUIRED

Appendix E: City of Mercer Island Hazard Maps

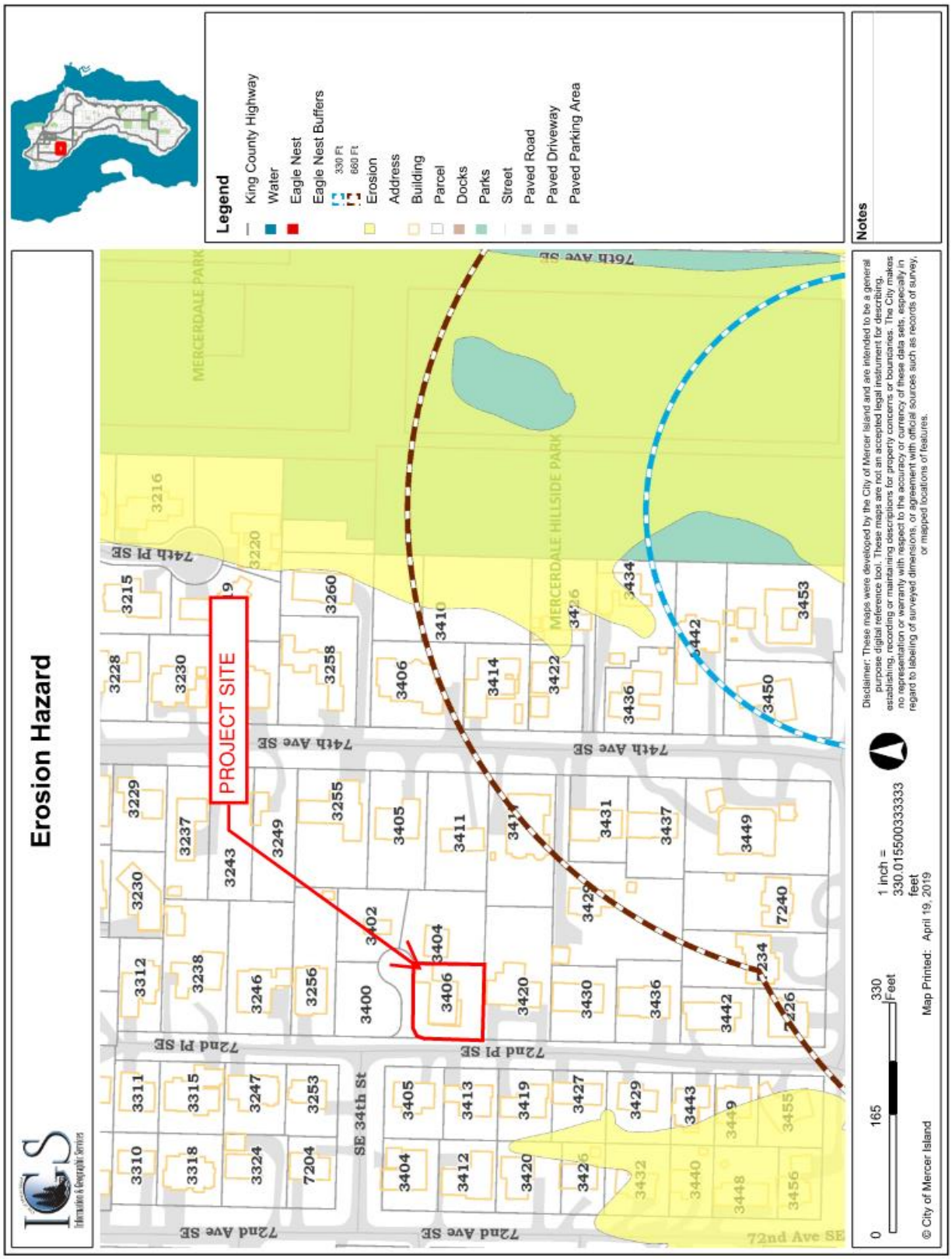
Erosion Hazard
Legend
King County Highway
Water
Eagle Nest
Eagle Nest Buffers
330 Ft
660 Ft
Erosion
Address
Building
Parcel
Docks
Parks
Street
Paved Road
Paved Driveway
Paved Parking Area
Notes
PROJECT SITE
MERCERDALE PARK
MERCERDALE HILLSIDE PARK
74th Pl SE
74th Ave SE
72nd Pl SE
72nd Ave SE
SE 34th St
76th Ave SE
3406
3404
3402
3400
3420
3430
3436
3442
3234
3226
3453
3450
3449
3437
3431
3429
3414
3410
3411
3405
3255
3249
3243
3237
3229
3230
3228
3215
3216
3220
3260
3258
3312
3238
3246
3256
3311
3315
3247
3253
3310
3318
3324
7204
3413
3419
3427
3443
3455
3404
3412
3420
3432
3440
3448
3456
7240
0
165
330
Feet
1 inch =
330.0155003333333
feet
Map Printed: April 19, 2019
© City of Mercer Island
Disclaimer: These maps were developed by the City of Mercer Island and are intended to be a general purpose digital reference tool. These maps are not an accepted legal instrument for describing, establishing, recording or maintaining descriptions for property concerns or boundaries. The City makes no representation or warranty with respect to the accuracy or currency of these data sets, especially in regard to labeling of surveyed dimensions, or agreement with official sources such as records of survey, or mapped locations of features.

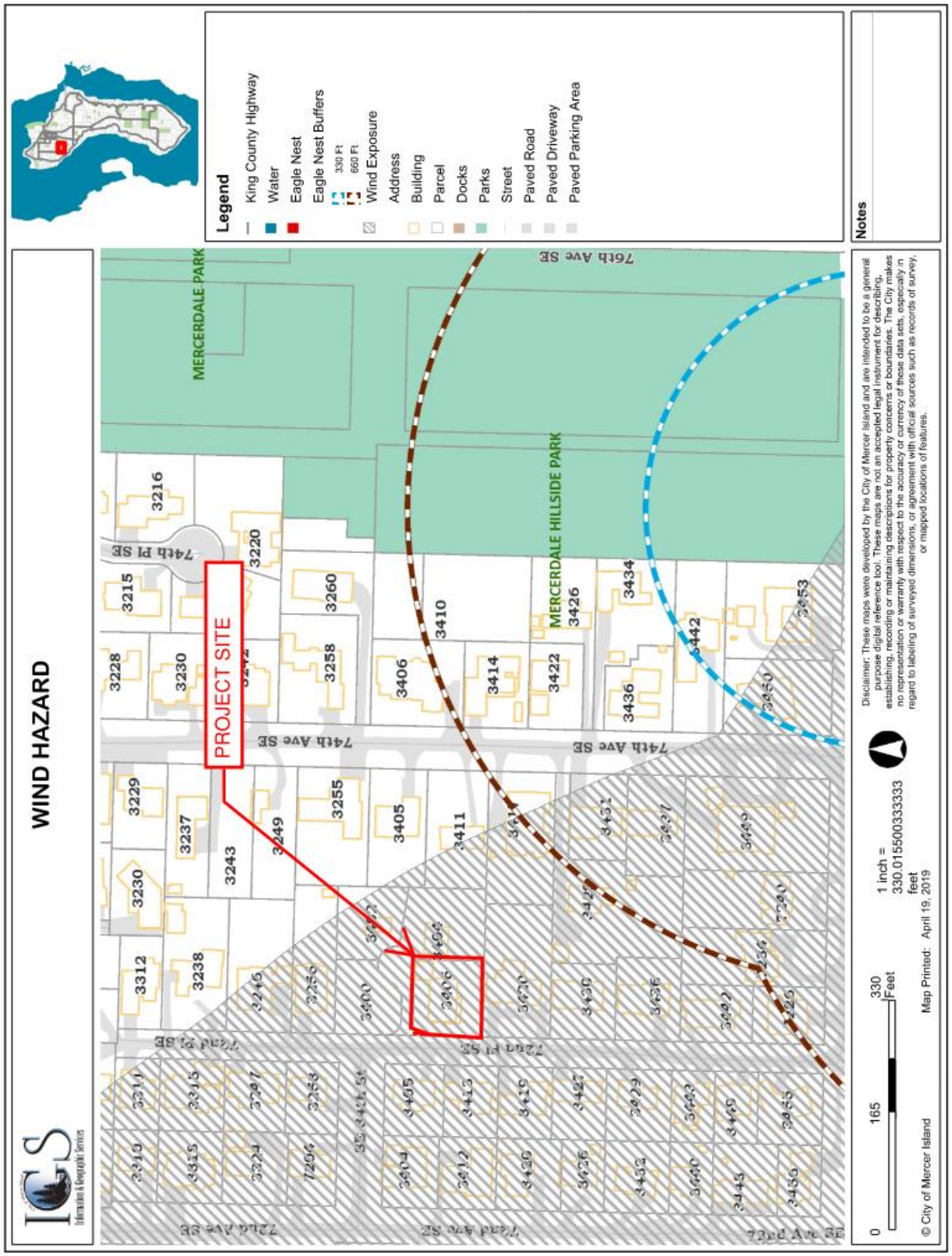
WIND HAZARD
Legend
King County Highway
Water
Eagle Nest
Eagle Nest Buffers
330 Ft
660 Ft
Wind Exposure
Address
Building
Parcel
Docks
Parks
Street
Paved Road
Paved Driveway
Paved Parking Area
Notes
MERCERDALE PARK
MERCERDALE HILLSIDE PARK
PROJECT SITE
76th Ave SE
74th Pl SE
74th Ave SE
72nd Pl SE
72nd Ave SE
72nd Ave SE
3216
3215
3220
3228
3230
3260
3258
3406
3410
3414
3422
3426
3434
3436
3442
3450
3453
3229
3237
3243
3249
3255
3405
3411
3312
3238
3246
3256
3400
3406
3420
3430
3436
3442
3450
3453
0
165
330
Feet
1 inch =
330.015500333333
feet
Map Printed: April 19, 2019
© City of Mercer Island
Disclaimer: These maps were developed by the City of Mercer Island and are intended to be a general purpose digital reference tool. These maps are not an accepted legal instrument for describing, establishing, recording or maintaining descriptions for property concerns or boundaries. The City makes no representation or warranty with respect to the accuracy or currency of these data sets, especially in regard to labeling of surveyed dimensions, or agreement with official sources such as records of survey, or mapped locations of features.

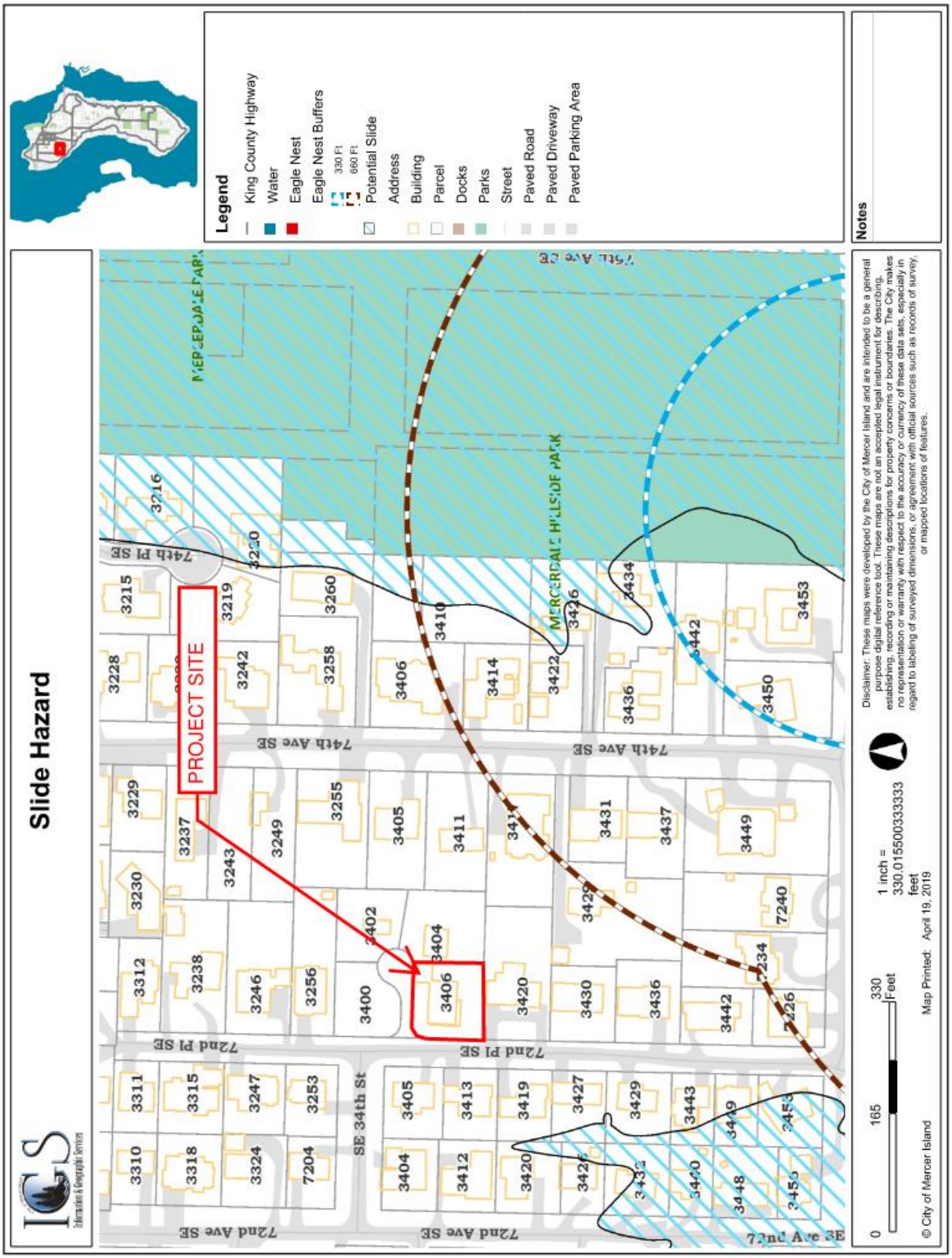
Slide Hazard
Legend
King County Highway
Water
Eagle Nest
Eagle Nest Buffers
330 Ft
660 Ft
Potential Slide
Address
Building
Parcel
Docks
Parks
Street
Paved Road
Paved Driveway
Paved Parking Area
Notes
PROJECT SITE
MERCERDALE HILLSIDE PARK
74th Pl SE
74th Ave SE
72nd Pl SE
72nd Ave SE
SE 34th St
3216
3220
3215
3219
3260
3228
3242
3258
3406
3410
3414
3422
3426
3434
3442
3453
3450
3436
3229
3237
3243
3249
3255
3405
3411
3431
3437
3449
3230
3402
3404
3429
7240
3312
3238
3246
3256
3400
3406
3420
3430
3436
3442
7234
7226
3311
3315
3247
3253
3310
3318
3324
7204
3405
3413
3419
3427
3429
3443
3449
3453
3404
3412
3420
3426
3432
3440
3448
3456
0
165
330
Feet
1 inch =
330.0155000333333
feet
Map Printed: April 19, 2019
© City of Mercer Island
Disclaimer: These maps were developed by the City of Mercer Island and are intended to be a general purpose digital reference tool. These maps are not an accepted legal instrument for describing, establishing, recording or maintaining descriptions for property concerns or boundaries. The City makes no representation or warranty with respect to the accuracy or currency of these data sets, especially in regard to labelling of surveyed dimensions, or agreement with official sources such as records of survey, or mapped locations of features.

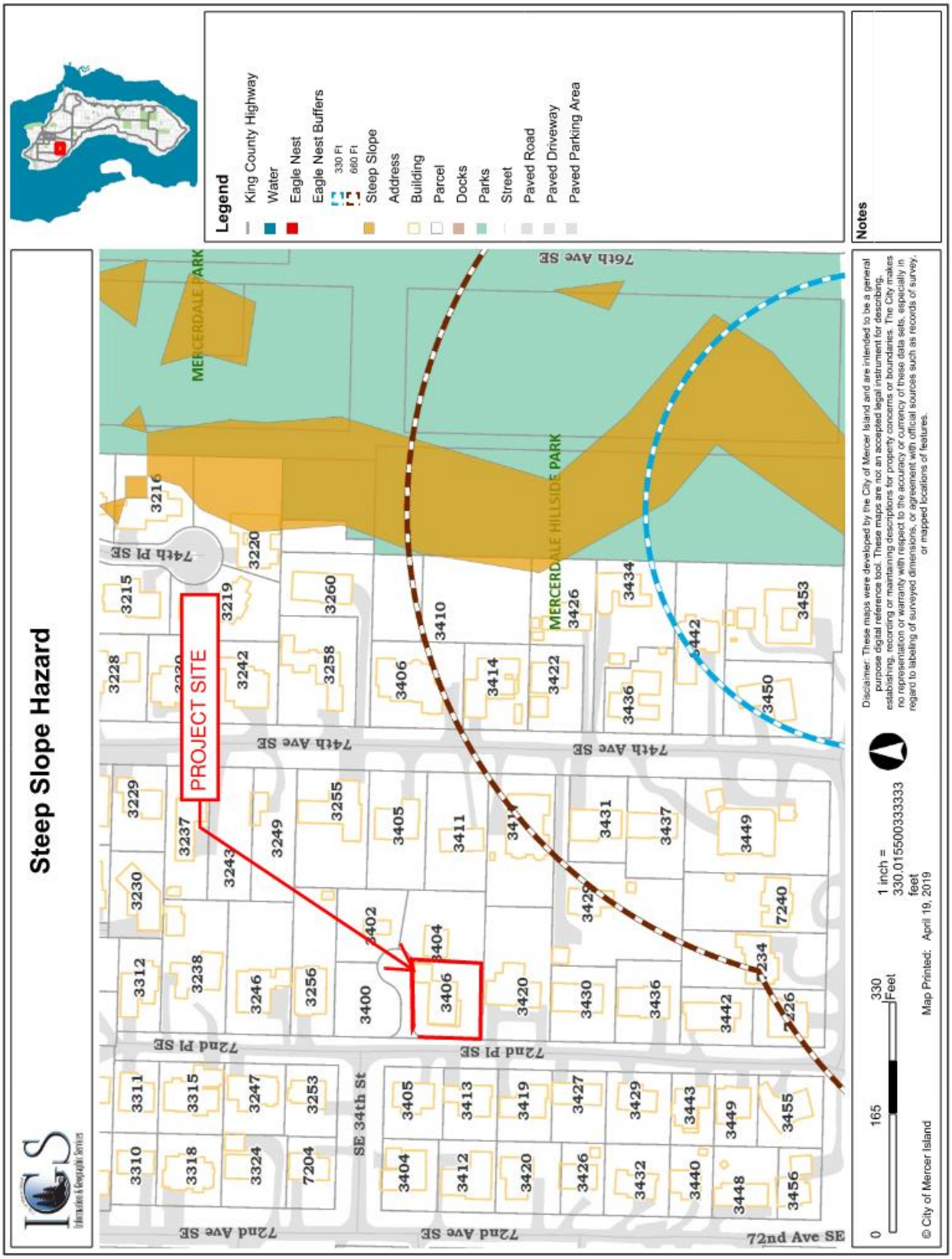
Steep Slope Hazard
Legend
King County Highway
Water
Eagle Nest
Eagle Nest Buffers
330 Ft
660 Ft
Steep Slope
Address
Building
Parcel
Docks
Parks
Street
Paved Road
Paved Driveway
Paved Parking Area
Notes
PROJECT SITE
MERCERDALE PARK
MERCERDALE HILLSIDE PARK
76th Ave SE
74th Pl SE
74th Ave SE
72nd Pl SE
72nd Ave SE
SE 34th St
3406
3400
3402
3404
3405
3411
3414
3410
3420
3430
3436
3442
3449
3453
3450
3434
3426
3422
3431
3437
3429
7240
7234
7226
3216
3220
3219
3215
3228
3229
3230
3237
3243
3249
3255
3260
3258
3242
3312
3238
3246
3256
3311
3315
3247
3253
3310
3318
3324
7204
3404
3412
3420
3426
3432
3440
3448
3456
3405
3413
3419
3427
3429
3443
3449
3455
0
165
330
Feet
1 inch = 330.015500333333 feet
Map Printed: April 19, 2019
© City of Mercer Island
Disclaimer: These maps were developed by the City of Mercer Island and are intended to be a general purpose digital reference tool. These maps are not an accepted legal instrument for describing, establishing, recording or maintaining descriptions for property concerns or boundaries. The City makes no representation or warranty with respect to the accuracy or currency of these data sets, especially in regard to labeling of surveyed dimensions, or agreement with official sources such as records of survey, or mapped locations of features.

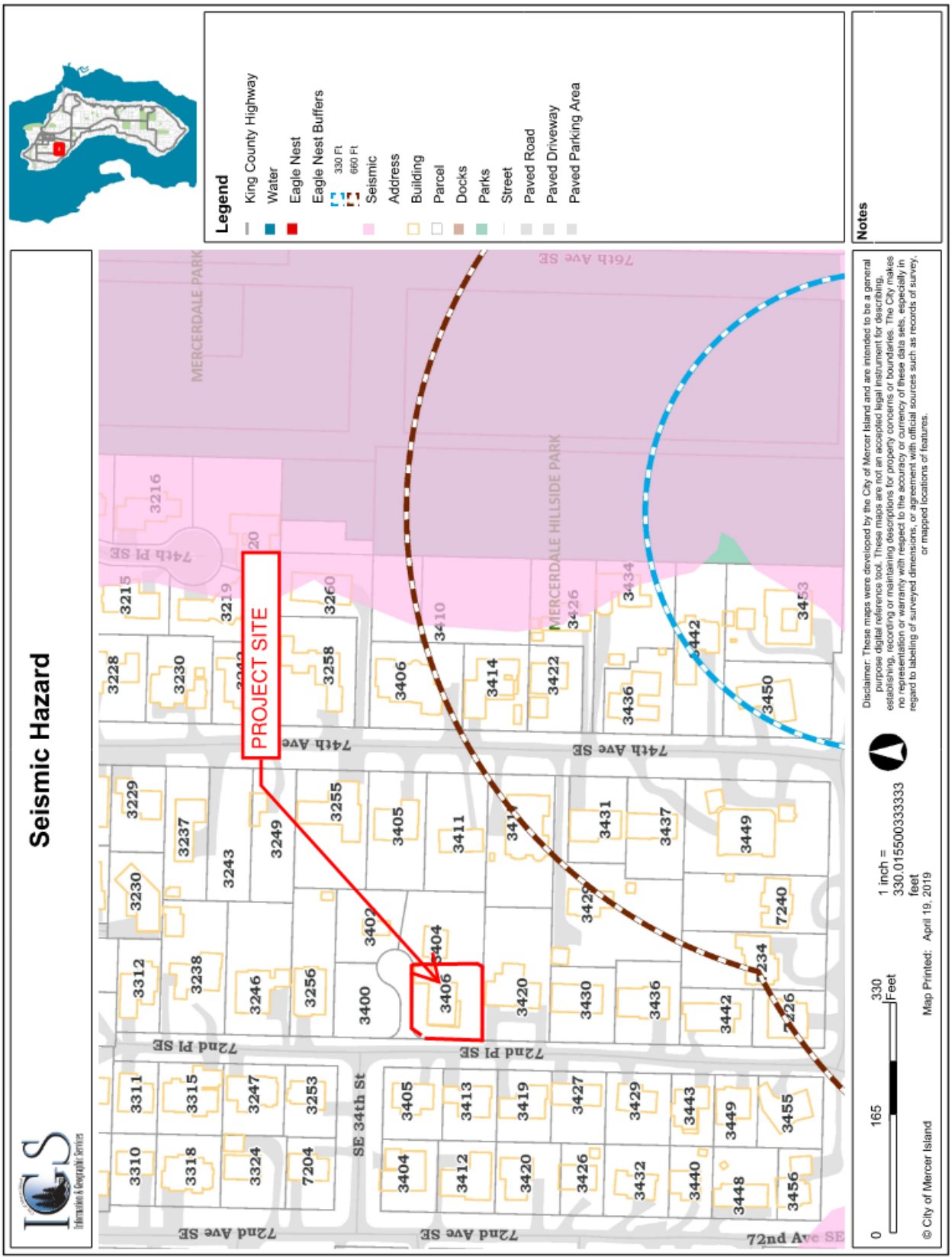
Seismic Hazard
Legend
King County Highway
Water
Eagle Nest
Eagle Nest Buffers
330 Ft
660 Ft
Seismic
Address
Building
Parcel
Docks
Parks
Street
Paved Road
Paved Driveway
Paved Parking Area
Notes
PROJECT SITE
MERCERDALE PARK
MERCERDALE HILLSIDE PARK
74th Ave SE
74th Pl SE
72nd Pl SE
72nd Ave SE
SE 34th St
3406
3404
3400
3402
3410
3414
3422
3426
3434
3442
3450
3453
3436
3430
3420
3411
3405
3255
3249
3243
3237
3229
3230
3228
3215
3216
3219
3260
3258
3312
3238
3246
3256
3311
3315
3247
3253
3310
3318
3324
7204
3413
3419
3427
3429
3443
3449
3455
3412
3432
3440
3448
3456
3431
3437
7240
7234
7226
© City of Mercer Island
0
165
330
Feet
1 inch = 330.015500333333 feet
Map Printed: April 19, 2019
Disclaimer: These maps were developed by the City of Mercer Island and are intended to be a general purpose digital reference tool. These maps are not an accepted legal instrument for describing, establishing, recording or maintaining descriptions for property concerns of boundaries. The City makes no representation or warranty with respect to the accuracy or currency of these data sets, especially in regard to labeling of surveyed dimensions, or agreement with official sources such as records of survey, or mapped locations of features.