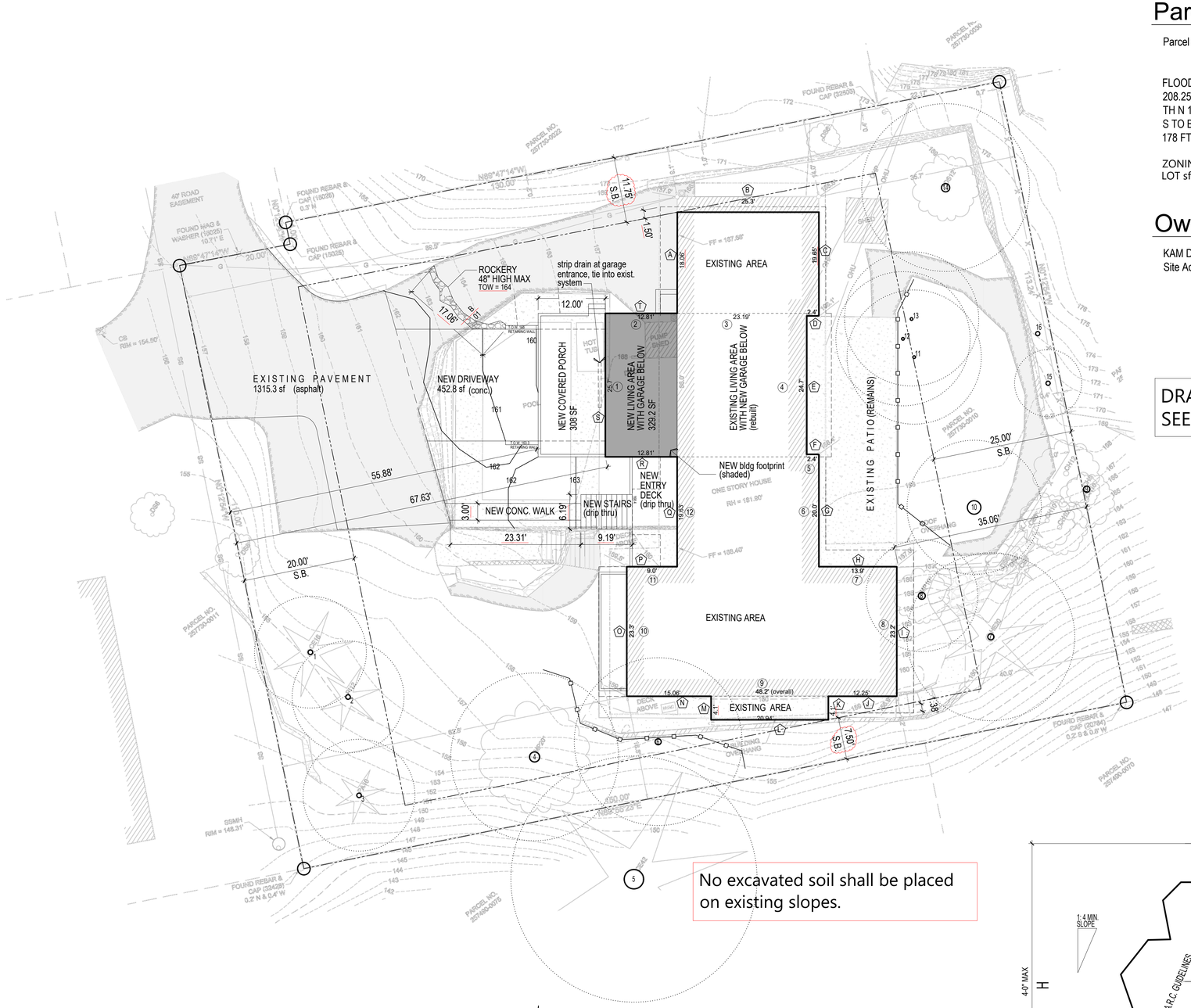

No excavated soil shall be placed on existing slopes.

A. SITE PLAN

1/10" = 1'-0"

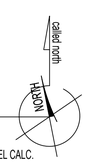

Ⓐ = WALL SEGMENT TAG FOR HEIGHT CALCULATION & REMODEL CALC.
① = WALL SEGMENT TAG FOR BASEMENT FAR EXCEPTION
= EAVE/ROOF LINE
= REVISED TOPO (FINISHED GRADES)
= EXISTING TOPOGRAPHY (SURVEY SHOWN IN BACKGROUND)

= TREE FENCING, CHAIN LINK
= GROUND PROTECTION AREA - (9" OF WOOD CHIPS)
SEE ARBORISTS REPORT FOR FULL TREE PROTECTION NOTES
Ⓔ = TREE NUMBER PER ARBORIST'S REPORT
Ⓔ = EXCEPTIONAL TREE
= TREE LIMIT OF DISTURBANCE

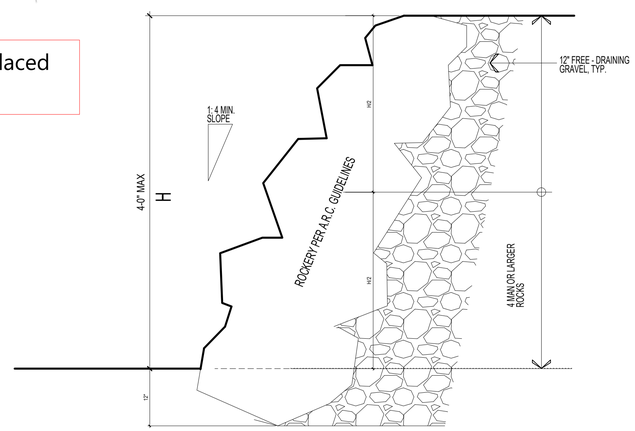

B. ROCKERY

NTS

Parcel Number/Legal

Parcel # 2577300010

FLOODS ACRE GARDENS ADD POR 5-6-7-8 BEG AT PT 208.25 FT S OF NE COR OF SEC 24-24-4 TH W 627 FT TH N 111.41 FT TH E 289 FT TH N 4 FT TH E 338 FT TH S TO BEG LESS CO RD LESS W 269 FT THOF LESS E 178 FT THOF

ZONING = R-15
LOT sf = 16,963

Owner

KAM DERAKSHANI
Site Address 8151 SE 48TH ST 98040

Structural Engineer

Javid Abdi, PE, SE Atlas Consulting Structural Engineers
6810 NE 149th St Kenmore WA 98028
Phone: (206) 427-7233

Contractor

Farhad (Frank) Imani
SILVER BASIN CONSTRUCTION LLC
16223 SE 31ST ST BELLEVUE, WA 98008
lic. # SILVEBC814K8
206-910-7959

Project Description

Remodel of existing single family residence. New garage (in new basement - 908.5 sf) and new living area at main floor (329.2sf) with new covered porch (308sf)

DRAINAGE EXEMPT
SEE SHEET 1C

CONTINUOUS GEOTECHNICAL INSPECTION IS REQUIRED DURING EXCAVATION.

All Japanese knotweed (Polygonum cuspidatum) and Regulated Class A, Regulated Class B, and Regulated Class C weeds identified on the King County Noxious Weed list, as amended, shall be removed from the property.

development proposals for a new single-family home shall remove japanese knotweed (polygonum cuspidatum) and regulated class a, regulated class b, and regulated class c weeds identified on the king county noxious weed list, as amended, from required landscaping areas established pursuant to subsection 19.02.020(f)(3)(a). new landscaping associated with new single-family home shall not incorporate any weeds identified on the king county noxious weed list, as amended. provided, that removal shall not be required if the removal will result in increased slope instability or risk of landslide or erosion.

ABE CALCULATION

	EL @ MIDPOINT	segment	wtd sgmnt
A	168.00	20.81	3496.08
B	169.00	25.30	4275.70
C	169.00	21.40	3616.60
D	169.00	2.40	405.60
E	169.00	24.70	4174.30
F	169.00	2.40	405.60
G	168.00	20.00	3360.00
H	167.50	13.90	2328.25
I	162.50	23.20	3770.00
J	159.00	12.25	1947.75
K	159.00	4.70	747.30
L	159.00	20.94	3329.46
M	159.00	4.70	747.30
N	159.60	15.06	2403.58
O	159.60	23.30	3718.68
P	160.00	9.00	1440.00
Q	168.00	19.63	3297.84
R	168.00	12.81	2152.08
S	**159.80**	25.70	4106.86
T	167.50	12.81	2145.68
		315.01	51868.65

AVG. EL = 164.6572
BOLD = NEW EL LOWER THAN EXIST

9317 REGISTERED ARCHITECT CHRIS LUTHY STATE OF WASHINGTON

CENTERLINE DESIGN
4737 37th AVE SW
SEATTLE
206.932.8706
www.Centerline-Design.com

Derakshani Remodel

8151 SE 48th St. Mercer Island WA

CONTENTS
Site Plan

DRAWN BY
CRL

DATE
4.1.21
10.7.21

1A

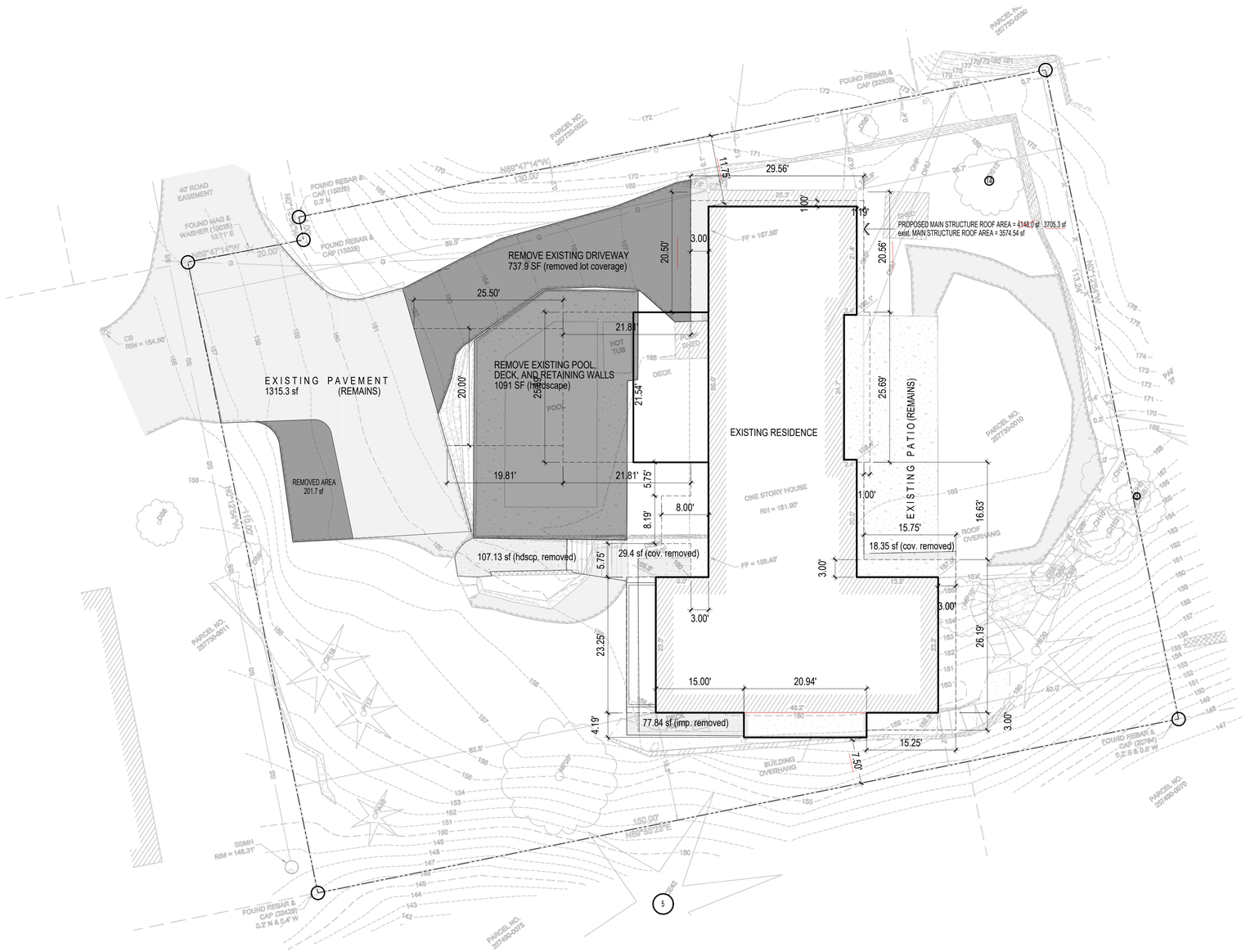

TOTAL REMOVED LOT COVERAGE

DRIVE = 939.6 sf
MISC. roof = 232.68 sf

PROJECT TOTAL = 1172.28 sf

TOTAL F.A.R. CALC.

MAIN FLOOR L.A. PROPOSED = 3086.4 sf
LOWER FLOOR L.A. PROPOSED = 1631.9 sf (w/o below grade exception)
LOWER FLOOR GARAGE PROPOSED = 908.48 sf (w/o below grade exception)

F.A.R. PROJECT TOTAL = 5626.8 sf
allow. = 16963 sf x .4 = 6785.2 MAX

TOTAL HARDSCAPE CALC

REMAINING HARDSCAPE	PROPOSED NEW HARDSCAPE	
patios = 500 sf	decks = 57.6 sf	
walks = 450 sf	walks = 71.6 sf	
stairs = 115 sf	stairs = 64.74 sf	PROJECT TOTAL
rockeries = 192.5 sf	rockeries = 31.5 sf	REMAINING + NEW
TOTAL remaining = 1257.5 sf	TOTAL new = 225.44 sf	1257.5 + 225.44 = 1482.94

TOTAL ALLOWABLE = 16963 sf x .09 = 1526.67 sf

SUPPLEMENTAL
A. SITE PLAN

1/10" = 1'-0"

called north

NORTH

= TREE FENCING, CHAIN LINK
= GROUND PROTECTION AREA - (9" OF WOOD CHIPS)
SEE ARBORISTS REPORT FOR FULL TREE PROTECTION NOTES
= TREE NUMBER PER ARBORIST'S REPORT
= EXCEPTIONAL TREE
= TREE LIMIT OF DISTURBANCE

= WALL SEGMENT TAG FOR HEIGHT CALCULATION
= EAVE/ROOF LINE
= REVISED TOPO (FINISHED GRADES)
= EXISTING TOPOGRAPHY (SURVEY SHOWN IN BACKGROUND)

9317 REGISTERED ARCHITECT CHRIS LUTHI STATE OF WASHINGTON

CENTERLINE DESIGN
4737 37th AVE SW
SEATTLE
206.932.8706
www.Centerline-Design.com

Derakshani Remodel
8151 SE 48th St. Mercer Island WA

CONTENTS

Site Plan

DRAWN BY
CRL

DATE
4.1.21
10.7.21

1B

LOT COVERAGE CALC.

PROPOSED MAIN STRUCTURE ROOF AREA = 4018.0 sf
PROPOSED DRIVE = (e) 1315.3 + (n) 452.8 = 1768.1 sf

PROPOSED PROJECT TOTAL = 5786.1 sf

COVERAGE LIMIT = 16,963 sf x .35 = 5937.05 sf

EXISTING DRIVE = 2256.4 sf
EXISTING HOUSE TO EAVES = 3574.54 sf

EXISTING PROJECT TOTAL = 5830.94 sf

net reduction of imperv.

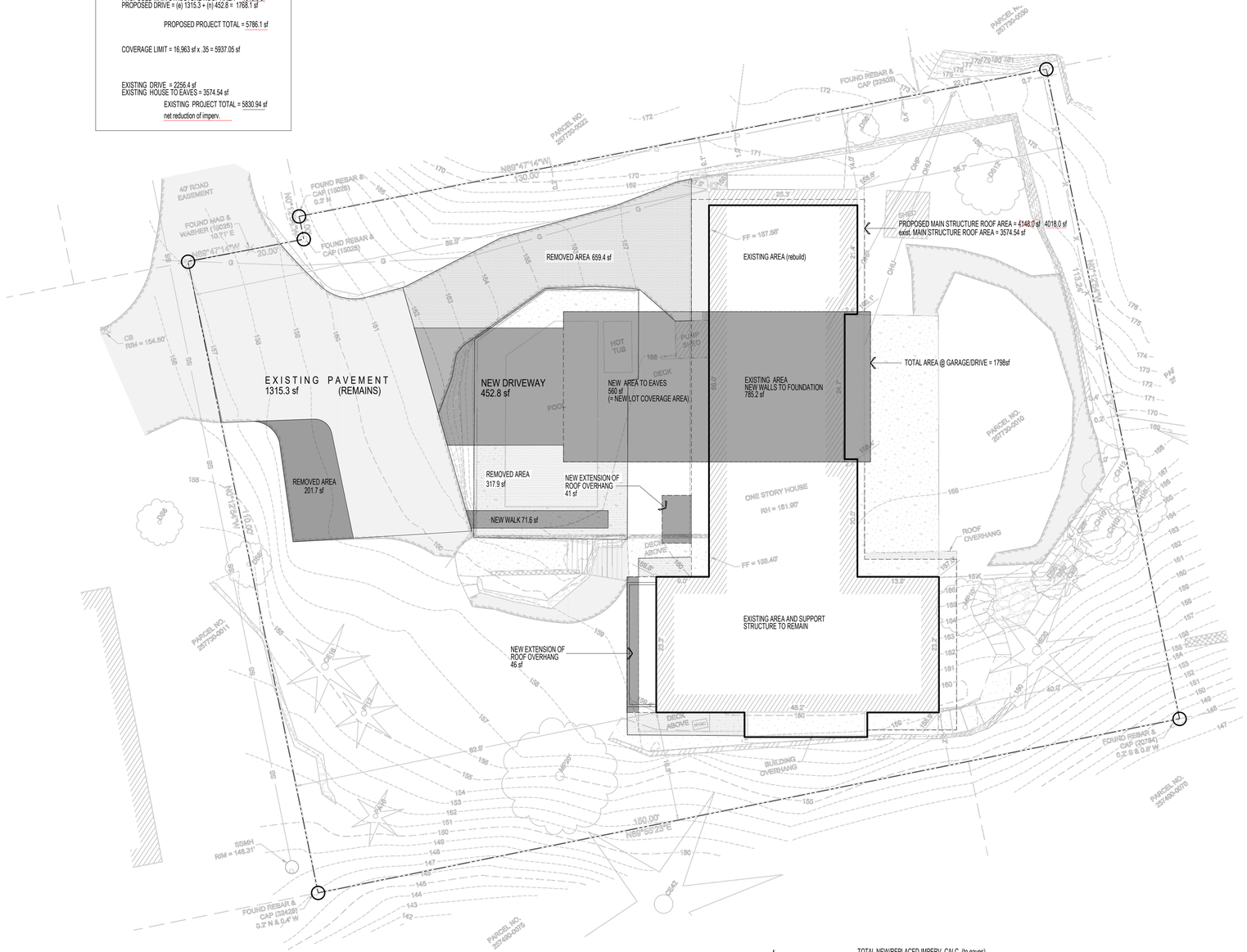

A. IMPERVIOUS SITE PLAN

1/10" = 1'-0"

= NEW/RE-BUILT IMPERVIOUS AREA

= EXISTING IMPERVIOUS AREA REMOVED

= EXISTING TOPOGRAPHY + SURVEY SHOWN IN BACKGROUND

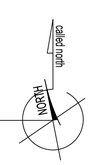

TOTAL NEW/REPLACED IMPERV. CALC. (to eaves)

NEW / REPLACED AREA AT GARAGE / DRIVEWAY = 1798 sf
ADDITIONAL EAVES = 87 sf
NEW WALK = 71.6 sf

PROJECT TOTAL =1956.6 sf

9317
REGISTERED
ARCHITECT
CHRIS LUTHI
STATE OF WASHINGTON

CENTERLINE
DESIGN
4737 37th AVE SW
SEATTLE
206.932.8706

www.Centerline-Design.com

Derakshani Remodel

8151 SE 48th St. Mercer Island WA

CONTENTS

Site Plan

DRAWN BY

CRL

DATE

4.1.21
10.7.21

1C

NOTES

SD = SMOKE DETECTOR, HARDWIRE, INTERCONNECTED w/ BATTERY BACK-UP
CO CARBON MONOXIDE DETECTOR, HARDWIRE w/ BATTERY BACK-UP

DOORS ARE 3-0 x 6-8 (r.o. = 3'-2" x 6'-10") unless otherwise indicated
= FAN, 50 CFM UNLESS OTHERWISE INDICATED
FOR SHEAR WALL INFORMATION SEE STRUCTURAL PLANS
ALL INTERIOR WALLS TO BE 2x4, EXTERIOR WALLS 2x6, EXCEPT AS INDICATED, OR EXISTING
E =EGRESS WINDOWS
Contractor shall verify to Inspector all guards and railings shall be capable of resisting 200 lb load on top rail acting in any direction as required by IRC Table R301.5.
ALL WALLS FULL HIEGHT UNLESS OTHERWISE INDICATED
T =TEMPER/SAFETY GLAZE WINDOWS
ALL GAS F.P. TO BE APPROVED DIRECT VENT

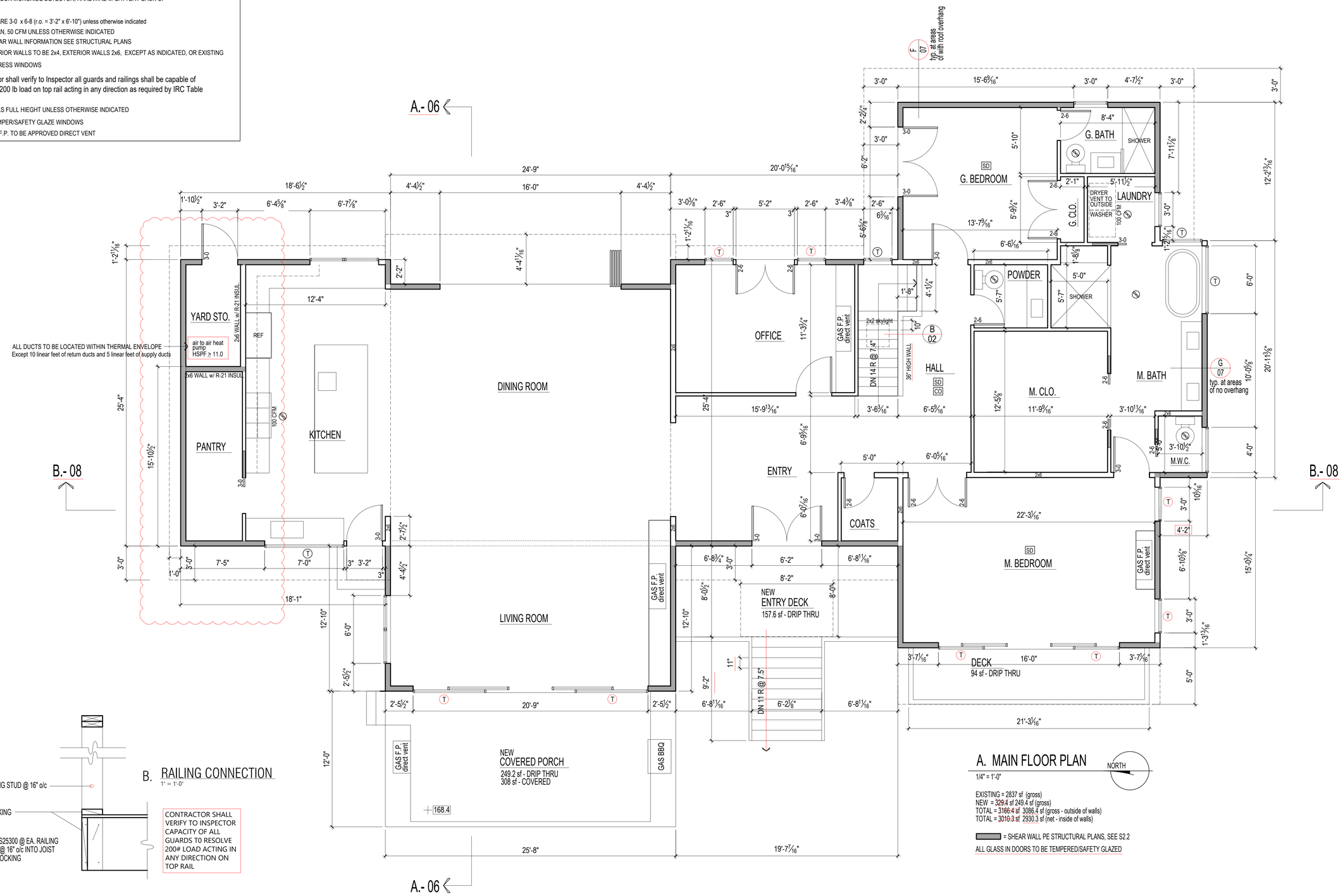

A. MAIN FLOOR PLAN
1/4" = 1'-0"

NORTH

EXISTING = 2837 sf (gross)
NEW = 329.4 sf 249.4 sf (gross)
TOTAL = 3166.4 sf 3086.4 sf (gross - outside of walls)
TOTAL = 3010.3 sf 2930.3 sf (net - inside of walls)

= SHEAR WALL PE STRUCTURAL PLANS, SEE S2.2

ALL GLASS IN DOORS TO BE TEMPERED/SAFETY GLAZED

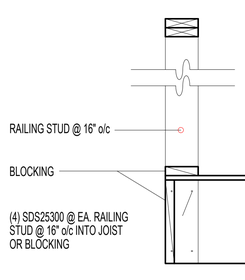

B. RAILING CONNECTION
1" = 1'-0"

CONTRACTOR SHALL VERIFY TO INSPECTOR CAPACITY OF ALL GUARDS TO RESOLVE 200# LOAD ACTING IN ANY DIRECTION ON TOP RAIL

9317 REGISTERED ARCHITECT CHRIS LUTHI STATE OF WASHINGTON

CENTERLINE DESIGN
4737 37th AVE SW
SEATTLE
206.935.4684
www.Centerline-Design.com

Derakshani Remodel

Mercer Island WA

CONTENTS

Main Floor Plan

DRAWN BY
CRL

DATE
4.1.21
10.7.21

02

NOTES

SD = SMOKE DETECTOR, HARDWIRE, INTERCONNECTED w/ BATTERY BACK-UP
CO CARBON MONOXIDE DETECTOR, HARDWIRE w/ BATTERY BACK-UP

DOORS ARE 3-0 x 6-8 (r.o. = 3'-2" x 6'-10") unless otherwise indicated
= FAN, 50 CFM UNLESS OTHERWISE INDICATED
FOR SHEAR WALL INFORMATION SEE STRUCTURAL PLANS
ALL INTERIOR WALLS TO BE 2x4, EXTERIOR WALLS 2x6, EXCEPT AS INDICATED, OR EXISTING
(E) =EGRESS WINDOWS

Contractor shall verify to Inspector all guards and railings shall be capable of resisting 200 lb load on top rail acting in any direction as required by IRC Table R301.5.

ALL WALLS FULL HIEGHT UNLESS OTHERWISE INDICATED
(T) =TEMPER/SAFETY GLAZE WINDOWS
ALL GAS F.P. TO BE APPROVED DIRECT VENT

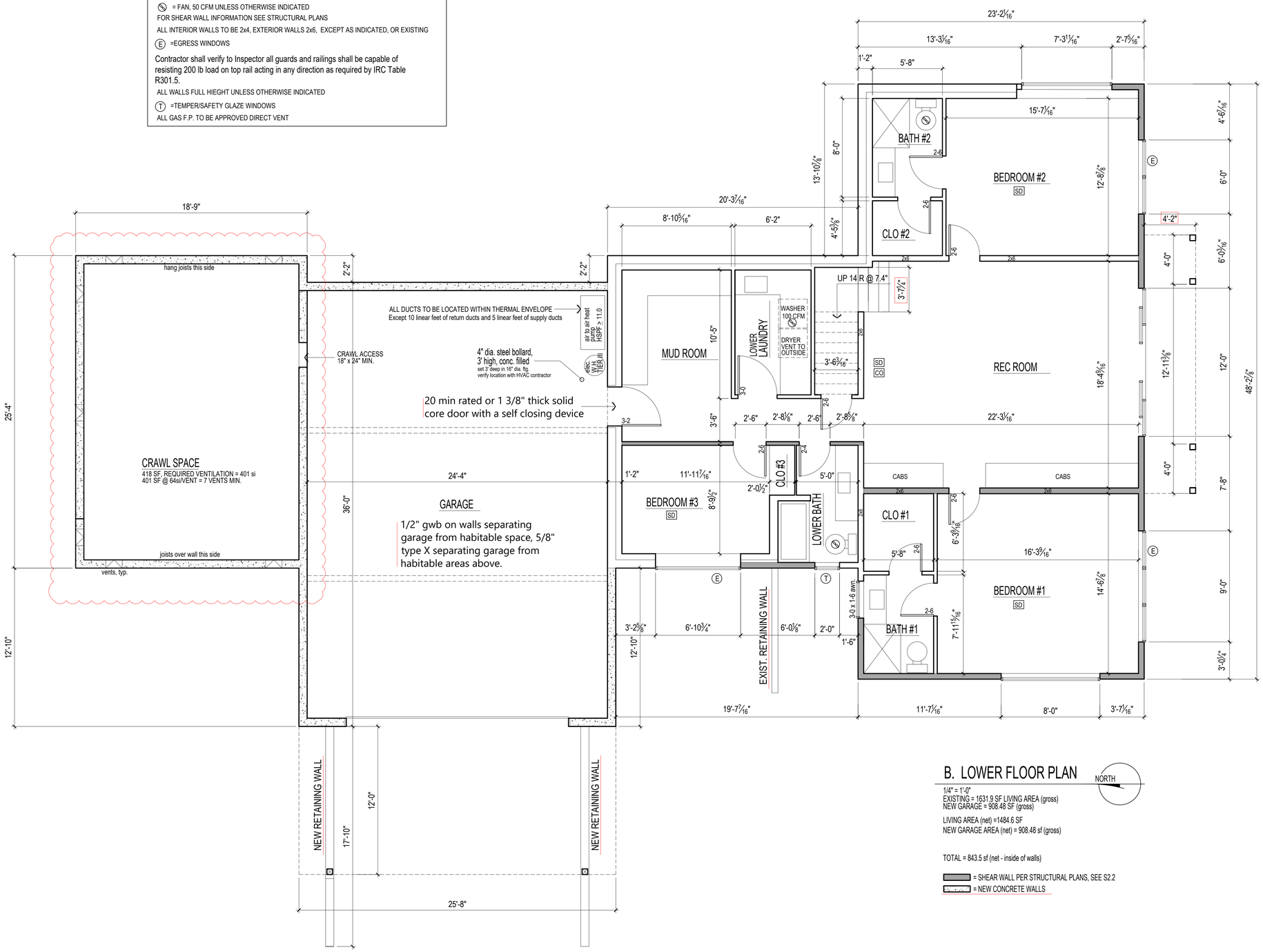

B. LOWER FLOOR PLAN

NORTH

1/4" = 1'-0"
EXISTING = 1631.9 SF LIVING AREA (gross)
NEW GARAGE = 908.48 SF (gross)

LIVING AREA (net) =1484.6 SF
NEW GARAGE AREA (net) = 908.48 sf (gross)

TOTAL = 843.5 sf (net - inside of walls)

= SHEAR WALL PER STRUCTURAL PLANS, SEE S2.2
= NEW CONCRETE WALLS

9317 REGISTERED ARCHITECT CHRIS LUTHI STATE OF WASHINGTON

CENTERLINE DESIGN
4737 37th AVE SW
SEATTLE
206.935.4684
www.Centerline-Design.com

Derakshani Remodel
Mercer Island WA

CONTENTS
Lower Floor Plan

DRAWN BY
CRL
DATE
4.1.21
10.7.21

03

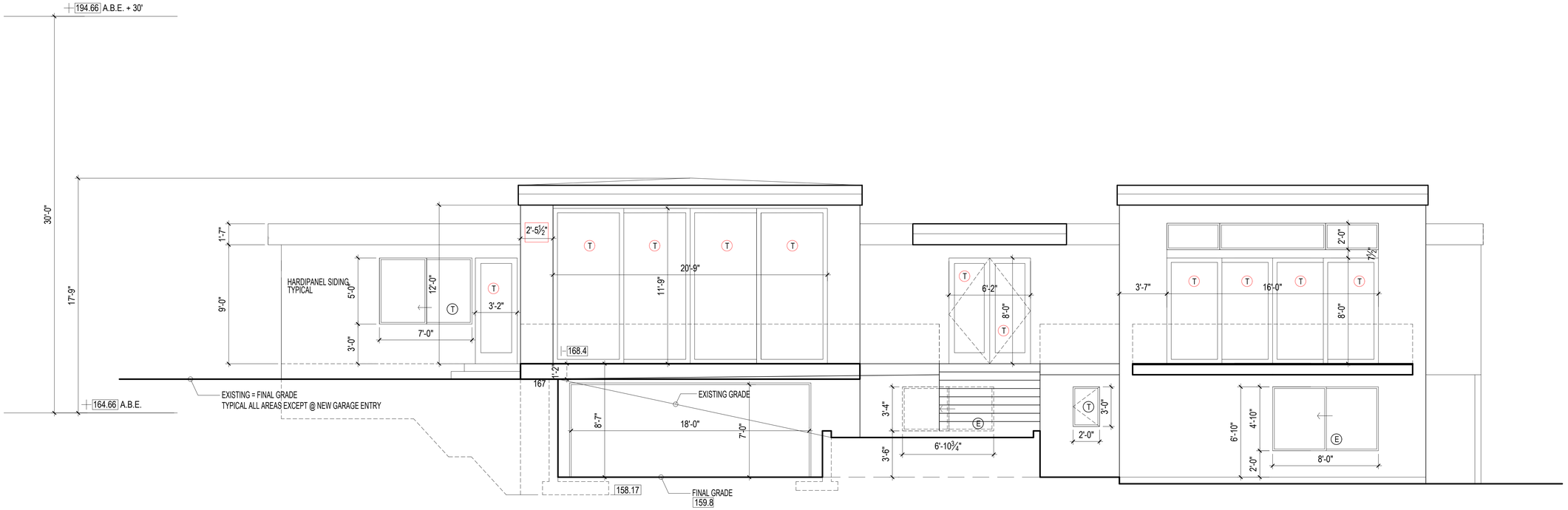

WEST ELEVATION

1/4" = 1'-0"

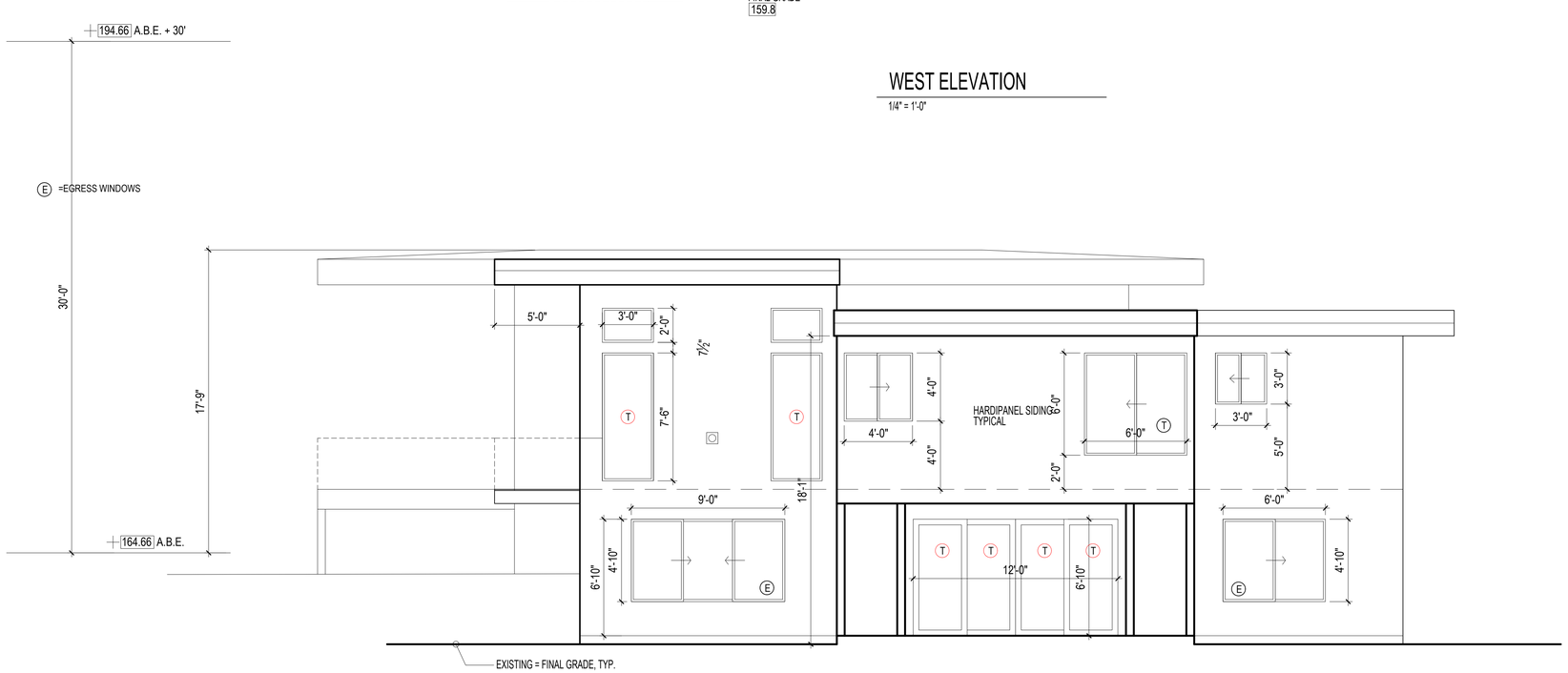

SOUTH ELEVATION

1/4" = 1'-0"

9317 REGISTERED ARCHITECT CHRIS LUTHI STATE OF WASHINGTON

CENTERLINE
DESIGN
4737 37th AVE SW
SEATTLE
206.935.4684

www.Centerline-Design.com

Derakshani Remodel

Mercer Island WA

CONTENTS

S and W Elevations

DRAWN BY
CRL

DATE
4.1.21
10.7.21

04

EAST ELEVATION

1/4" = 1'-0"

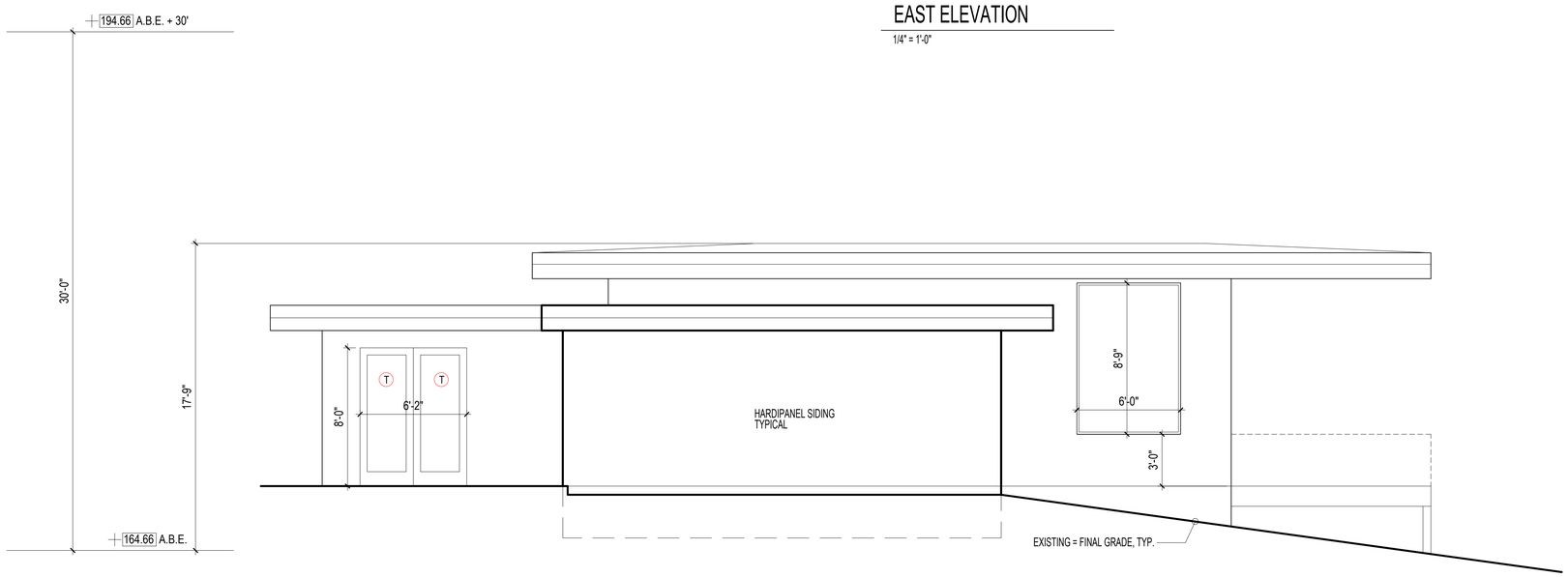

NORTH ELEVATION

1/4" = 1'-0"

9317 REGISTERED ARCHITECT CHRIS LUTHI STATE OF WASHINGTON

CENTERLINE DESIGN
4737 37th AVE SW
SEATTLE
206.935.4684
www.Centerline-Design.com

Derakshani Remodel

Mercer Island WA

CONTENTS

N and E Elevations

DRAWN BY

CRL

DATE

4.1.21

10.7.21

05

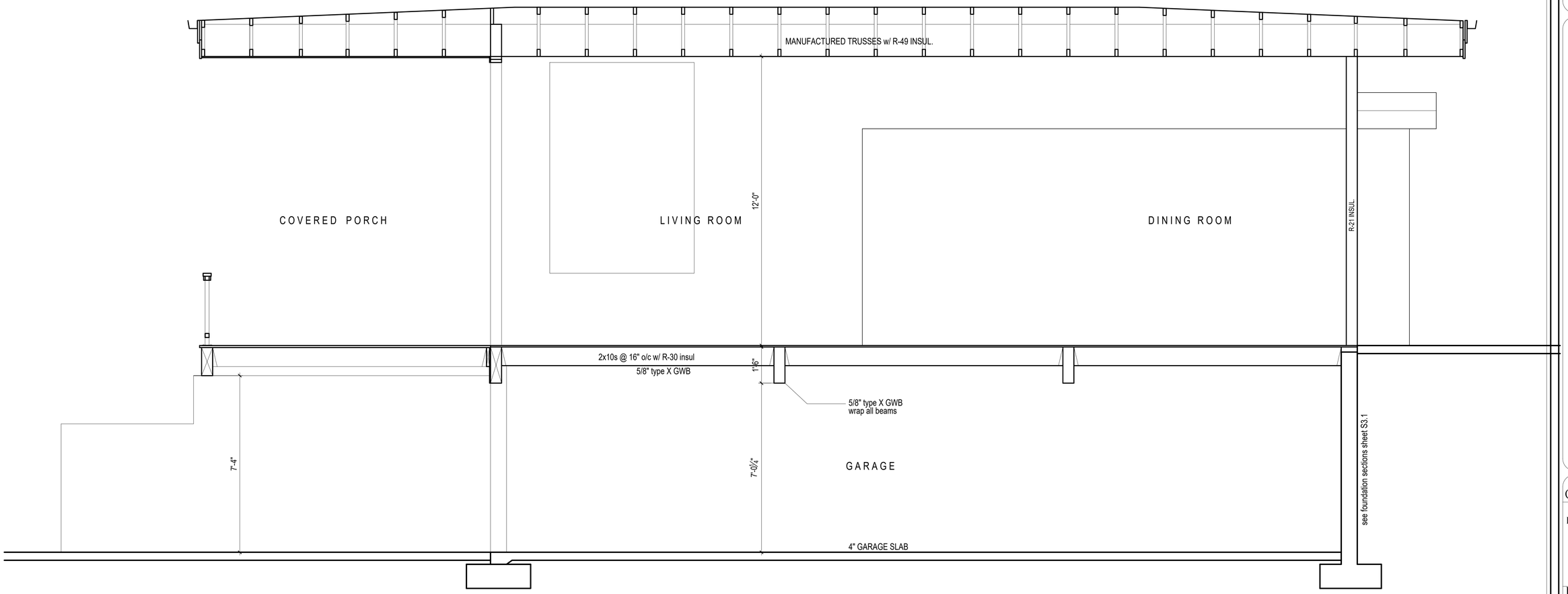

SECTION @ GARAGE/LIVING ROOM

1/2" = 1'-0"

9317 REGISTERED ARCHITECT CHRIS LUTHI STATE OF WASHINGTON

CENTERLINE
DESIGN
4737 37th AVE SW
SEATTLE
206.935.4684

www.Centerline-Design.com

Derakshani Remodel

Mercer Island WA

CONTENTS

LR Section

DRAWN BY

CRL

DATE

4.1.21

06

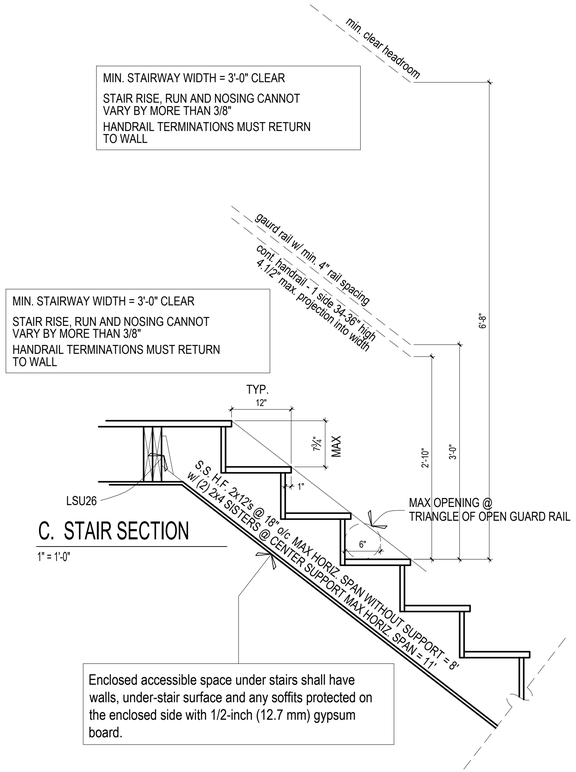

C. STAIR SECTION
1" = 1'-0"

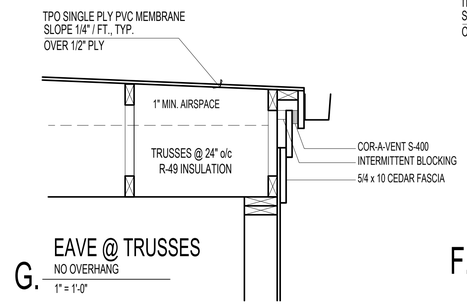

G. EAVE @ TRUSSES
NO OVERHANG
1" = 1'-0"

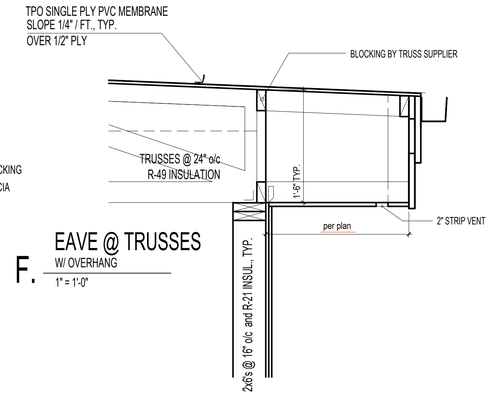

F. EAVE @ TRUSSES
W/ OVERHANG
1" = 1'-0"

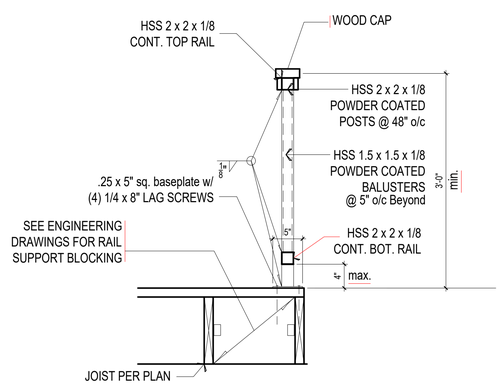

D. RAILING DETAIL
NO OVERHANG, perp to jsts.
1" = 1'-0"

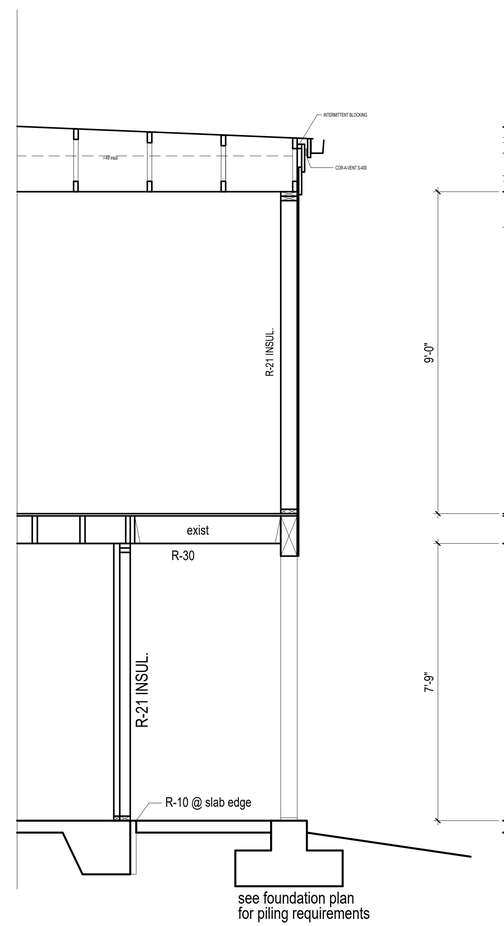

SECTION @ SOUTH BUMP-OUT
1/2" = 1'-0"

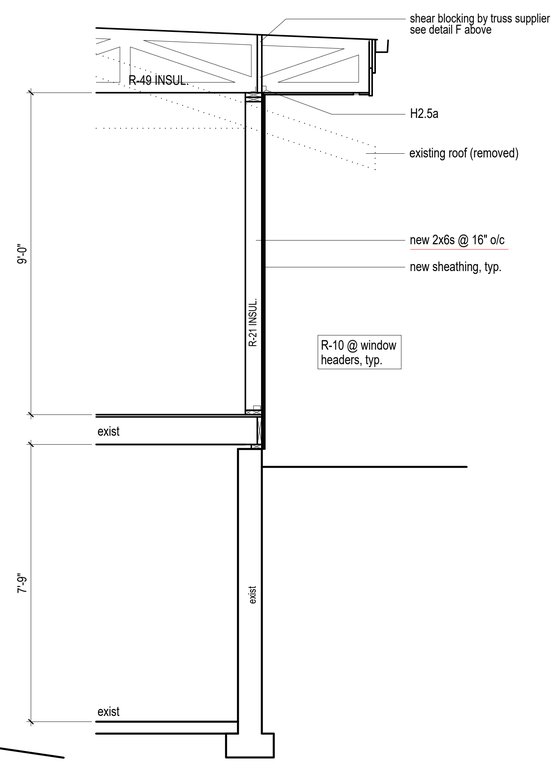

TYPICAL SECTION
1/2" = 1'-0"

9317 REGISTERED ARCHITECT CHRIS LUTHI STATE OF WASHINGTON

CENTERLINE DESIGN
4737 37th AVE SW
SEATTLE
206.935.4684
www.Centerline-Design.com

Derakshani Remodel

Mercer Island WA

CONTENTS

Arch Details

DRAWN BY
CRL

DATE
4.1.21
10.7.21

07

Energy Code Info

2018 WA STATE PRESCRIPTIVE PATH FOR ALL
CLIMATE ZONES
ENERGY CREDIT OPTIONS =
1.7(.5),2(1),2.1(.5),3.6(2),5.5(2) = 6 CREDITS
Vertical fenestration U = 0.30
Floor R-30

PRIMARY RESIDENCE HVAC NOTES

DUCTED HEAT PUMP (HSPF>9.0) INT. AIR HANDLER
INTEGRATED VENTILATION
REQUIRED VENTILATION = CONTINUOUS 120CFM
SET TO OPERATE AT 240 CFM FOR 2 HOURS IN EA. 4 HR PERIOD (50%)
PROVIDED BY VARIABLE SPEED HIGH EFF. FAN (MAX .35 WATTS/CFM)
CONTOLLED TO OPERATE AT LOW SPEED IN VENTILATION
MODE ONLY.

design professional or builder shall complete and post an "Insulation Certificate for Residential Construction" within 3' of the electrical panel prior to final inspection.

A minimum of 75 percent of permanently installed lamps in lighting fixtures shall be high-efficacy lamps.

Maximum flow rates for shower heads and kitchen sink - 1.75 GPM or less. All other lavatory faucets - 1.0 GPM or less.

Air leakage shall not exceed 3 air changes/ hour and shall be tested as such. A written report of the test results, shall be signed by the testing party and provided to the building inspector, prior to call for final inspection.

Per WSEC R402.4, The building thermal Envelope shall be constructed to limit air leakage to 3.0 air changes per hour maximum. The results of the test shall be signed by the party conducting the test and provided to the code official (R402.4.1.2). Per WSEC R403.1.1, at least one thermostat per dwelling unit shall be capable of controlling the heating and cooling system on a daily schedule. Per WSEC R403.2.2, Ducts, air handlers, and filter boxes shall be sealed. Per WSEC R404.1, A minimum of 75 percent of the lamps in permanently installed lighting fixtures shall be high-efficacy lamps.

All Climate Zones (Table R402.1.1)		
	R-Value [a]	U-Factor [a]
Fenestration U-Factor [b]	n/a	0.30
Skylight U-Factor [b]	n/a	0.50
Glazed Fenestration SHGC [b,e]	n/a	n/a
Ceiling [e]	49	0.026
Wood Frame Wall [g,h]	21 int	0.056
Floor	30	0.029
Below Grade Wall [c,h]	10/15/21 int + TB	0.042
Slab [d,f] R-Value & Depth	10, 2 ft	n/a

a	*R*-values are minimums. *U*-factors and SHGC are maximums. When insulation is installed in a cavity that is less than the label or design thickness of the insulation, the compressed *R*-value of the insulation from Appendix Table A101.4 shall not be less than the *R*-value specified in the table.
b	The fenestration *U*-factor column excludes skylights.
c	"10/15/21 +5TB" means R-10 continuous insulation on the exterior of the wall, or R-15 continuous insulation on the interior of the wall, or R-21 cavity insulation plus a thermal break between the slab and the basement wall at the interior of the basement wall. "10/15/21 +5TB" shall be permitted to be met with R-13 cavity insulation on the interior of the basement wall plus R-5 continuous insulation on the interior or exterior of the wall. "5TB" means R-5 thermal break between floor slab and basement wall.
d	R-10 continuous insulation is required under heated slab on grade floors. See Section R402.2.9.1.
e	For single rafter- or joist-vaulted ceilings, the insulation may be reduced to R-38 if the full insulation depth extends over the top plate of the exterior wall.
f	R-7.5 continuous insulation installed over an existing slab is deemed to be equivalent to the required perimeter slab insulation when applied to existing slabs complying with Section R503.1.1. If foam plastic is used, it shall meet the requirements for thermal barriers protecting foam plastics.
g	For log structures developed in compliance with Standard ICC 400, log walls shall meet the requirements for *climate zone* 5 of ICC 400.
h	Int. (intermediate framing) denotes framing and insulation as described in Section A103.2.2 including standard framing 16 inches on center, 78% of the wall cavity insulated and headers insulated with a minimum of R-10 insulation.

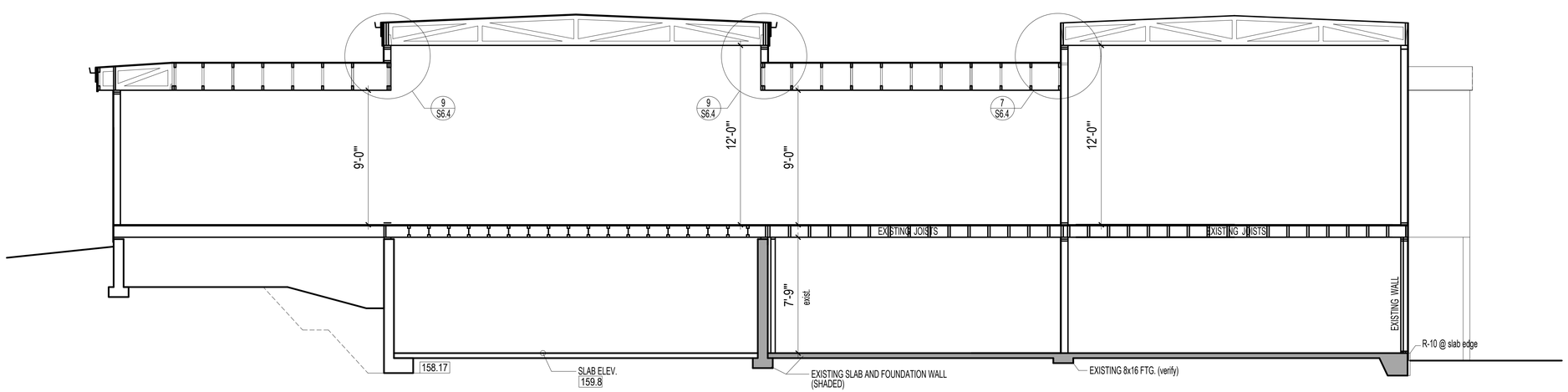

B. LONGITUDINAL SECTION B
1/4" = 1'-0"

9317 REGISTERED ARCHITECT CHRIS LUTHI STATE OF WASHINGTON

CENTERLINE DESIGN
4737 37th AVE SW
SEATTLE
206.935.4684
www.Centerline-Design.com

Deraksha Remodel
Mercer Island WA

CONTENTS
Shoring Layouts

DRAWN BY
CRL
DATE
4.1.21
10.7.21

08

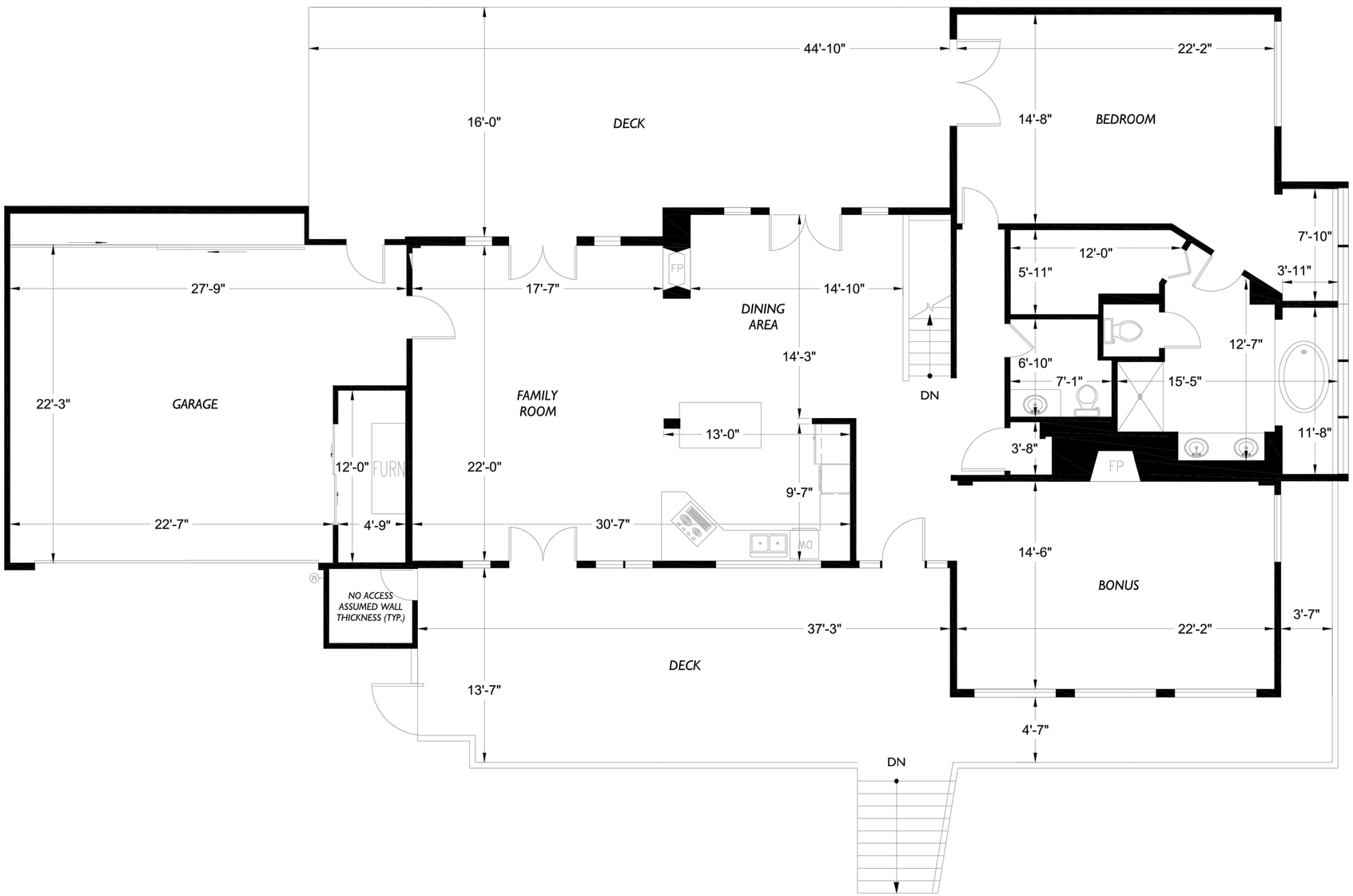

A. EXISTING MAIN FLOOR PLAN

1/4" = 1'-0"

NORTH

9317 REGISTERED ARCHITECT CHRIS LUTHI STATE OF WASHINGTON

CENTERLINE
DESIGN
4737 37th AVE SW
SEATTLE
206.935.4684
www.Centerline-Design.com

Derakshani Remodel

Mercer Island WA

CONTENTS

Existing
Main Floor Plan

DRAWN BY

CRL

DATE

10.7.21

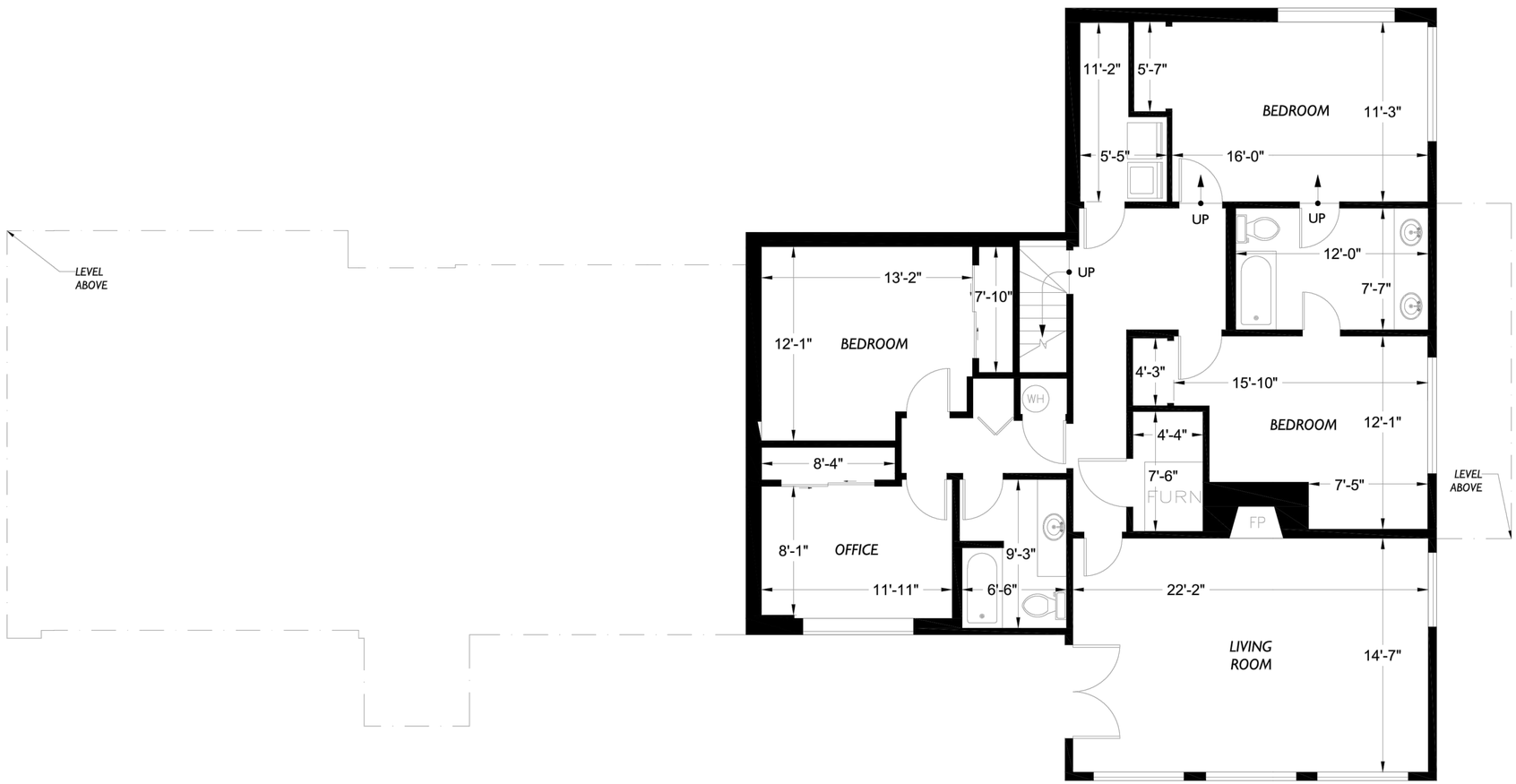

A. EXISTING LOWER FLOOR PLAN

1/4" = 1'-0"

NORTH

9317 REGISTERED ARCHITECT CHRIS LUTHI STATE OF WASHINGTON

CENTERLINE DESIGN
4737 37th AVE SW
SEATTLE
206.935.4684
www.Centerline-Design.com

Derakshani Remodel

Mercer Island WA

CONTENTS

Existing Lower Floor Plan

DRAWN BY

CRL

DATE

10.7.21

N

W E

S

GRAPHIC SCALE

5 0 5 10 20

1INCH = 10 FT.

LEGEND

FOUND MONUMENT AS DESCRIBED	OHP — OVERHEAD POWER
FOUND REBAR AS DESCRIBED	OHU — OVERHEAD UTILITIES
FOUND MAG & WASHER	X — CHAINLINK FENCE
SET 5/8" X 24" IRON ROD W/1" YELLOW PLASTIC CAP	WOOD FENCE
SET MAG NAIL AS DESCRIBED	CONCRETE WALL
GUY WIRE	ROCKERY
POWER METER	ASPHALT SURFACE
UTILITY POLE	CONCRETE SURFACE
GAS METER	GRAVEL SURFACE
SANITARY SEWER MANHOLE	
CATCH BASIN	CE CEDAR
G — APPROXIMATE LOCATION UNDERGROUND GAS LINE	CH CHERRY
SS — APPROXIMATE LOCATION SANITARY SEWER LINE	DS DECIDUOUS
SD — APPROXIMATE LOCATION STORM DRAIN LINE	HE HEMLOCK
TIMBER WALL	MP MAPLE
	PA PALM
	PI PINE
	* INDICATES MULTI-TRUNK

LEGAL DESCRIPTION

THAT PORTION OF GOVERNMENT LOT 7, SECTION 24, TOWNSHIP 24 NORTH, RANGE 4 EAST, WILLAMETTE MERIDIAN, IN KING COUNTY, WASHINGTON, DESCRIBED AS FOLLOWS:
BEGINNING AT THE NORTHEAST CORNER OF GOVERMENT LOT 7 IN SAID SECTION 24,
THENCE SOUTH 0°00'35" WEST ALONG THE EAST LINE THEREOF, 96 FEET;
THENCE NORTH 89°33'45" WEST PARALLEL WITH THE NORTH LINE OF SAID SECTION, 208 FEET TO THE TRUE POINT OF BEGINNING;
THENCE CONTINUING NORTH 89°33'45" WEST 130 FEET;
THENCE SOUTH 0°00'35" WEST 4 FEET;
THENCE NORTH 89°33'45" WEST 20 FEET;
THENCE SOUTH 0°00'35" WEST 110.05 FEET TO A POINT BEARING NORTH 89°51'58" WEST FROM A POINT ON THE EAST LINE FO SAID SECTION 208.4 FEET SOUTH OF THE NORTHEAST CORNER THEREOF;
THENCE SOUTH 89°51'08" EAST TO A POINT BEARING SOUTH 0°00'35" WEST FROM THE TRUE POINT OF BEGINNING;
THENCE NORTH 0°00'35" EAST 113.00 FEET, MORE OR LESS, TO THE TRUE POINT OF BEGINNING;
TOGETHER WITH AN EASEMENT FOR ROAD PURPOSES OVER THE WEST 40 FEET OF THE EAST 378 FEET OF THE NORTH 100 FEET OF SAID SECTION 24.

BASIS OF BEARINGS

RECORD OF SURVEY FOR HELEN SCHWEDENBERG BY NORTH POINTE SURVEYING AS RECORDED UNDER RECORDING NUMBER 20111108900002, RECORDS OF KING COUNTY, WASHINGTON.

PROJECT INFORMATION

SURVEYOR:	SITE SURVEYING, INC. 21923 NE 11TH ST SAMMAMISH, WA 98074 PHONE: 425.298.4412
PROPERTY OWNER:	KAM DERAKSHANI 8151 SE 48TH STREET MERCER ISLAND, WA 98040
TAX PARCEL NUMBER:	257730-0010
PROJECT ADDRESS:	8151 SE 48TH STREET MERCER ISLAND, WA 98040
ZONING:	R-15
JURISDICTION:	CITY OF MERCER ISLAND
PARCEL ACREAGE:	16,963 S.F. (0.389 ACRES) AS SURVEYED

GENERAL NOTES

1. THIS SURVEY WAS COMPLETED WITHOUT BENEFIT OF A CURRENT TITLE REPORT. EASEMENTS AND OTHER ENCUMBRANCES MAY EXIST ON THIS PROPERTY THAT ARE NOT SHOWN HEREON.
2. INSTRUMENTATION FOR THIS SURVEY WAS A 3-SECOND SPECTRAPRECISION FOCUS 35 TOTAL STATION. PROCEDURES USED IN THIS SURVEY MEET OR EXCEED STANDARDS SET BY WAC 332-130-090.
3. THE INFORMATION ON THIS MAP REPRESENTS THE RESULTS OF A SURVEY MADE IN AUGUST 2020 AND CAN ONLY BE CONSIDERED AS INDICATING THE GENERAL CONDITIONS EXISTING AT THAT TIME.
4. UTILITIES SHOWN ON THIS SURVEY ARE BASED UPON ABOVE GROUND OBSERVATIONS AND AS-BUILT PLANS WHERE AVAILABLE. ACTUAL LOCATIONS OF UNDERGROUND UTILITIES MAY VARY AND UTILITIES NOT SHOWN ON THIS SURVEY MAY EXIST ON THIS SITE.
5. ALL MONUMENTS WERE LOCATED DURING THIS SURVEY UNLESS OTHERWISE NOTED.

VERTICAL DATUM & CONTOUR INTERVAL

DATUM

ELEVATIONS SHOWN ON THIS DRAWING WERE DERIVED FROM INFORMATION PROVIDED BY WCCS SURVEY CONTROL DATABASE.

THE MARK IS A MONUMENT IN CASE AT THE NE CORNER OF SECTION 24.

POINT ID NO. 8;
ELEVATION: 202.49 FEET NAVD 88

1.0' CONTOUR INTERVAL - THE EXPECTED VERTICAL ACCURACY IS EQUAL TO 1/2 THE CONTOUR INTERVAL OR PLUS / MINUS 0.5' FOR THIS PROJECT.

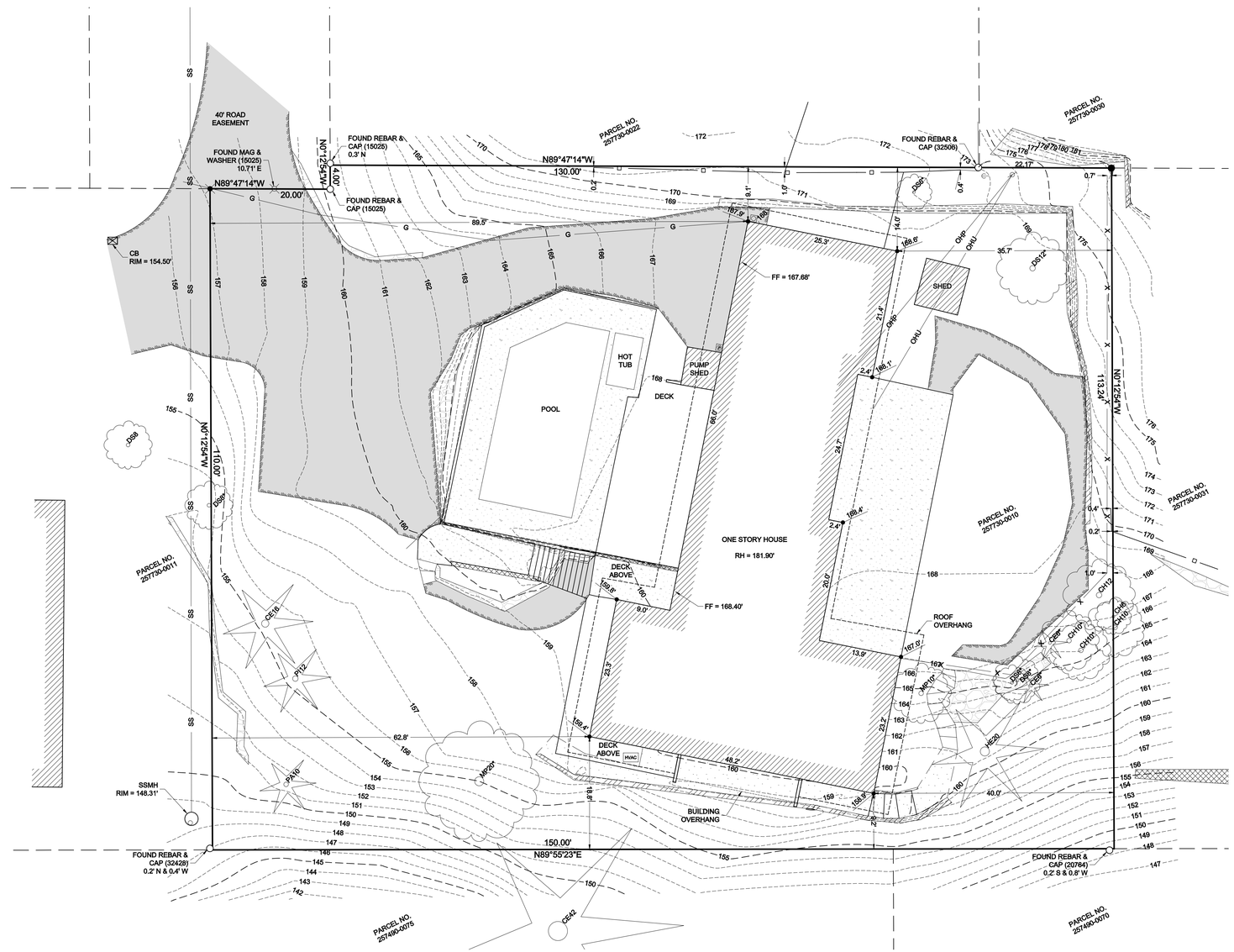

VICINITY MAP

NTS

NE 1/4, NE 1/4, SEC 24, TWP 24N, RNG 4E, W.M.

Site Surveying, Inc.
Phone: 425.298.4412
21923 NE 11th Street Sammamish, WA 98074
www.sitesurveymapping.com

WOLDEYDORP WASHINGTON GARY L. STATE OF WASHINGTON 35896 REGISTERED PROFESSIONAL LAND SURVEYOR THOMAS N. TEXAS

DATE	REVISION	DRN

TOPOGRAPHIC SURVEY

FRANK IMANI
8151 SE 48TH STREET
MERCER ISLAND, WA 98040

PROJECT NO. 20-346

DRAWN BY: MTS
CHECKED BY: TNW
DATE: 8/18/2020

SHEET 1 OF 1

General Structural Notes (GSN's)

CRITERIA:

1. ALL MATERIALS, WORKMANSHIP, DESIGN, AND CONSTRUCTION SHALL CONFORM TO THE DRAWINGS, SPECIFICATIONS, AND THE INTERNATIONAL BUILDING CODE (IBC) WITH WASHINGTON STATE ADMINISTRATIVE CODE AMENDMENTS, 2018 EDITION.

2. DESIGN LOADING CRITERIA
   RISK CATEGORY IBC TABLE 1604.5 II
   ROOF SNOW LOAD . . . . 25 PSF (I_S = 1.0)
   ROOF RAIN ON SNOW SURCHARGE . . . . 5 PSF
   ROOF DEAD LOAD . . . . 20 PSF
   LIVE LOAD . . . . 40 PSF
   DECK LIVE LOAD . . . . 60 PSF
   FLOOR DEAD LOAD . . . . .25 PSF

   EARTHQUAKE . . . . SEISMIC DESIGN CATEGORY D
   S_S = 1.443, S_1 = 0.501, S_{DS} = 1.155, S_{D1} = 0.601
   EQUIVALENT LATERAL FORCE PROCEDURE
   LIGHT FRAME (WOOD) WALLS AND ROOFS SHEATHED WITH WOOD STRUCTURAL PANELS RATED FOR SHEAR
   R = 6.5, Ω_0 = 2½, I_E = 1.0, C_d = 4, C_s = 0.178
   BASE SHEAR V = 39.0 K – LRFD
   WIND . . . . .110 MPH, EXPOSURE "C", Kzt = 1.0
   COMPONENTS & CLADDING . . . . –34.4/–20.7 PSF MAX. AT WALLS (LRFD/ASD)
   –58.3/–35.0 GROSS UPLIFT AT ROOF (LRFD/ASD)
   WIND PRESSURES BASED ON LESS THAN 10 SQUARE FOOT TRIBUTARY AREAS NEAR WALL CORNERS OR ROOF EDGES (EXCLUDING CORNER ZONES AT ROOF). REDUCED DESIGN PRESSURES MAY BE CALCULATED IN ACCORDANCE WITH ASCE 7–10 CHAPTER 30.

3. STRUCTURAL DRAWINGS SHALL BE USED IN CONJUNCTION WITH ALL OTHER CONTRACT DOCUMENTS FOR BIDDING AND CONSTRUCTION. CONTRACTOR SHALL VERIFY DIMENSIONS AND CONDITIONS FOR COMPATIBILITY AND SHALL NOTIFY ENGINEER OF ALL DISCREPANCIES PRIOR TO CONSTRUCTION. IT IS THE CONTRACTOR'S RESPONSIBILITY TO COORDINATE BUILDING LAYOUT DIMENSIONS (GRID LAYOUTS, SITE COORDINATES, ETC.) AMONGST ALL TRADES, INCLUDING SHOP FABRICATED ITEMS.

4. CONTRACTOR SHALL PROVIDE TEMPORARY BRACING, BOTH FOR VERTICAL LOADS AND LATERAL STABILITY, FOR THE STRUCTURE AND STRUCTURAL COMPONENTS UNTIL ALL FINAL CONNECTIONS HAVE BEEN COMPLETED IN ACCORDANCE WITH THE DRAWINGS.

5. CONTRACTOR SHALL BE RESPONSIBLE FOR ALL SAFETY PRECAUTIONS AND THE METHODS, TECHNIQUES, SEQUENCES OR PROCEDURES REQUIRED TO PERFORM THE WORK.

6. DRAWINGS INDICATE GENERAL AND TYPICAL DETAILS OF CONSTRUCTION. WHERE CONDITIONS ARE NOT SPECIFICALLY INDICATED BUT ARE OF SIMILAR CHARACTER TO DETAILS SHOWN, SIMILAR DETAILS OF CONSTRUCTION SHALL BE USED, SUBJECT TO REVIEW AND APPROVAL BY THE ARCHITECT AND THE STRUCTURAL ENGINEER.

7. ALL STRUCTURAL SYSTEMS COMPOSED OF COMPONENTS TO BE FIELD ERECTED SHALL BE SUPERVISED BY THE SUPPLIER DURING MANUFACTURING, DELIVERY, HANDLING, STORAGE AND ERECTION IN ACCORDANCE WITH INSTRUCTIONS PREPARED BY THE SUPPLIER.

8. SEISMIC BRACING AND/OR GRAVITY SUPPORT AND ANCHORAGE OF ALL MECHANICAL OR ELECTRICAL EQUIPMENT SHALL BE DESIGNED BY A PROFESSIONAL ENGINEER REGISTERED IN THE STATE OF WASHINGTON, EXCEPT FOR ELEMENTS SPECIFICALLY SHOWN AND DETAILED ON THE STRUCTURAL DRAWINGS. THE MECHANICAL/ELECTRICAL CONTRACTOR MUST HIRE THE ENGINEER AND IS RESPONSIBLE FOR ALL COSTS RELATED TO THE PURCHASE AND INSTALLATION OF NECESSARY SUPPORTS, BRACING AND ANCHORAGE. SEISMIC BRACING AND ANCHORAGE DESIGN AND CONSTRUCTION SHALL COMPLY WITH CHAPTER 13 OF ASCE 7–10.

9. SHOP DRAWING REVIEW: SHOP DRAWINGS FOR TRUSSES SHALL BE SUBMITTED TO THE CONTRACTOR, ARCHITECT, AND ENGINEER OF RECORD FOR REVIEW PRIOR TO FABRICATION OF THESE ITEMS. DIMENSIONS AND QUANTITIES ARE NOT REVIEWED BY THE ENGINEER OF RECORD, AND THEREFORE MUST BE VERIFIED BY THE CONTRACTOR. THE CONTRACTOR SHALL REVIEW AND STAMP DRAWINGS PRIOR TO REVIEW BY ENGINEER OF RECORD. SUBMITTALS SHALL INCLUDE A REPRODUCIBLE AND ONE COPY. THE REPRODUCIBLE SHALL BE MARKED AND RETURNED. SHOP DRAWING SUBMITTALS PROCESSED BY THE ENGINEER ARE NOT CHANGE ORDERS. THE PURPOSE OF SHOP DRAWING SUBMITTALS BY THE CONTRACTOR IS TO DEMONSTRATE TO THE ENGINEER THAT THE CONTRACTOR UNDERSTANDS THE DESIGN CONCEPT BY INDICATING WHICH MATERIAL IS INTENDED TO BE FURNISHED AND INSTALLED AND BY DETAILING THE INTENDED FABRICATION AND INSTALLATION METHODS. IF DEVIATIONS, DISCREPANCIES, OR CONFLICTS BETWEEN SHOP DRAWING SUBMITTALS AND THE CONTRACT DOCUMENTS ARE DISCOVERED EITHER PRIOR TO OR AFTER SHOP DRAWING SUBMITTALS ARE PROCESSED BY THE ENGINEER, THE DESIGN DRAWINGS AND SPECIFICATIONS SHALL CONTROL AND SHALL BE FOLLOWED.

10. DEFERRED SUBMITTALS SHALL BE DESIGNED BY AN ENGINEER REGISTERED IN THE STATE OF WASHINGTON. THE COMPONENT DESIGNER SHALL BE A REGISTERED STRUCTURAL ENGINEER IF REQUIRED BY THE BUILDING OFFICIAL OF THE LOCAL JURISDICTION. BUILDING COMPONENT SUBMITTALS SHALL INCLUDE THE DESIGNING PROFESSIONAL ENGINEER'S STAMP AND SHALL BE APPROVED BY THE COMPONENT DESIGNER PRIOR TO CURSORY REVIEW BY THE ENGINEER OF RECORD FOR LOADS IMPOSED ON THE BASIC STRUCTURE. THE COMPONENT DESIGNER IS RESPONSIBLE FOR CODE CONFORMANCE INCLUDING ACCOMMODATION FOR STRUCTURAL DISPLACEMENT PER ASCE 7–10 SECTION 13.3.2. AND ALL NECESSARY CONNECTIONS NOT SPECIFICALLY CALLED OUT ON ARCHITECTURAL OR STRUCTURAL DRAWINGS. DEFERRED SUBMITTALS SHALL INDICATE MAGNITUDE AND DIRECTION OF ALL LOADS IMPOSED ON BASIC STRUCTURE. DESIGN CALCULATIONS SHALL BE INCLUDED IN THE SUBMITTAL. THE CONTRACTOR SHALL FORWARD DEFERRED SUBMITTALS TO THE BUILDING OFFICIAL AND HAVE THE DEFERRED SUBMITTALS ON SITE FOR THE GOVERNING JURISDICTIONS INSPECTORS USE AND REFERENCE. THE FOLLOWING BUILDING COMPONENTS SHALL BE DEFERRED SUBMITTALS FOR THIS PROJECT:
    PREFABRICATED CONNECTOR PLATE WOOD ROOF TRUSSES (SEE NOTE 23)

GEOTECHNICAL:

11. FOUNDATION NOTES: SUBGRADE PREPARATION INCLUDING DRAINAGE, EXCAVATION, COMPACTION, AND FILLING REQUIREMENTS, SHALL CONFORM STRICTLY WITH THE RECOMMENDATIONS GIVEN IN THE SPECIFICATIONS OR AS DIRECTED BY THE OWNER APPOINTED GEOTECHNICAL ENGINEER. FOOTINGS SHALL BEAR ON FIRM, UNDISTURBED EARTH OR CONTROLLED, COMPACTED STRUCTURAL FILL AT LEAST 18" BELOW LOWEST ADJACENT FINISHED GRADE. THE OWNER APPOINTED GEOTECHNICAL ENGINEER SHALL APPROVE FOOTING EXCAVATION/PREPARATION PRIOR TO PLACEMENT OF ALL FOOTINGS. BACKFILL BEHIND ALL RETAINING WALLS WITH FREE DRAINING, GRANULAR FILL AND PROVIDE FOR SUBSURFACE DRAINAGE AS NOTED IN THE SPECIFICATIONS OR AS DIRECTED BY THE OWNER APPOINTED GEOTECHNICAL ENGINEER
    ALLOWABLE SOIL PRESSURE . . . . 3,000 PSF
    LATERAL EARTH PRESSURE (RESTRAINED / UNRESTRAINED) . . . . 45 PCF / 35 PCF
    PASSIVE EARTH PRESSURE . . . . 300 PCF (ULTIMATE)
    SEISMIC SURCHARGE . . . . 8H PSF (UNIFORM)
    BASE COEFFICIENT OF FRICTION . . . . 0.50 (ULTIMATE)
    FACTOR OF SAFETY FOR SLIDING AND OVERTURNING 1.50
    SOIL PROFILE TYPE . . . . SITE CLASS D
    GEOTECHNICAL REPORT REFERENCE: "Geotech Consultants, Inc. ... Geotechnical Engineering Study and Critical Area Study...Project JN21062...March 29, 2021"

11b. PIPE PILES SHALL BE 2"ø EXTRA–STRONG STEEL WITH AN ALLOWABLE COMPRESSIVE LOAD OF 3–TONS. INSTALLATION, FINAL PENETRATION RATE, FINISH, CONNECTION, ETC. SHALL CONFORM STRICTLY WITH THE RECOMMENDATIONS GIVEN IN THE ABOVE GEOTECHNICAL REPORT REFERENCE. PIPES SHALL BE DRIVEN TO REFUSAL USING A METHOD APPROVED BY THE PROJECT GEOTECHNICAL ENGINEER. ACTUAL LENGTH OF PILES TO ACHIEVE RECOMMENDED REFUSAL RATE SHALL NOT BE LESS THAN 7 FEEL BELOW THE EXISTING GRADE PER GEOTECHNICAL REPORT. PIPE PILE DEPTHS ARE SUBJECT TO ON–SITE VERIFICATION AND APPROVAL BY THE PROJECT GEOTECHNICAL ENGINEER. BATTERED PILES SHALL BE BATTERED DOWN TOWARD THE SOUTH AT A 1:5 (H:V) INCLINATION. DUE TO THE GROUND SURFACE SLOPING AWAY FROM THE SOUTHERN EDGE OF THE RESIDENCE, NO PASSIVE PRESSURE WAS ACCOUNTED FOR AGAINST THE PILE CAPS/GRADE BEAMS FOR THE SOUTHERN BUMP OUT ADDITION. THE LATERAL CAPACITY OF A BATTERED PILE IS EQUAL TO ONE–HALF OF THE LATERAL COMPONENT OF THE ALLOWABLE COMPRESSIVE LOAD, WITH A MAXIMUM ALLOWABLE LATERAL CAPACITY OF 500 POUNDS. THE ALLOWABLE VERTICAL CAPACITY OF BATTERED PILES DOES NOT NEED TO BE REDUCED IF THE PILES ARE BATTERED STEEPER THAN 1:5 (HORIZONTAL:VERTICAL).

ANCHORAGE:

12. DRIVE PINS AND OTHER POWDER–ACTUATED FASTENERS SHALL BE ONE OF THE FOLLOWING INSTALLED IN STRICT ACCORDANCE WITH THE ICC–ES REPORTS INDICATED AND MANUFACTURER'S INSTRUCTIONS INCLUDING MINIMUM EMBED REQUIREMENTS: "TE SERIES" (0.157" DIAMETER) AS MANUFACTURED BY ITW RAMSET (ICC–ES NO. 1799); OR "X–U" (0.157" DIAMETER) AS MANUFACTURED BY HILTI, INC. (ICC–ES NO. 2269); OR "STRONG–TIE PDPA" (0.157" DIAMETER) AS MANUFACTURED BY SIMPSON STRONG–TIE COMPANY, INC. (ICC–ES NO. 2138); OR "CSI PIN" (0.157" DIAMETER) AS MANUFACTURED BY DEWALT/POWERS (ICC–ES NO. 2024); OR AN APPROVED EQUIVALENT IN STRENGTH AND EMBEDMENT. MINIMUM EMBEDMENT IN CONCRETE SHALL BE 1" UNLESS OTHERWISE NOTED. MAINTAIN AT LEAST 3-1/2" TO NEAREST CONCRETE EDGE.

CONCRETE:

13. CONCRETE SHALL BE MIXED, PROPORTIONED, CONVEYED AND PLACED IN ACCORDANCE WITH ACI 318–14 CHAPTER 26 AND ACI 301. CONCRETE SHALL ATTAIN A 28–DAY STRENGTH OF f'c = 4,000 PSI (4,500 PSI AT ALL CONCRETE EXPOSED TO WEATHER). MAXIMUM WATER–CEMENTITIOUS MATERIAL RATIO FOR INTERIOR SLABS SHALL BE BETWEEN 0.40 AND 0.44. ALL CONCRETE SHALL BE EXPOSURE CLASSES F0, S0, W0, AND C0 PER ACI 318–14 TABLES 19.3.1.1 AND 19.3.2.1 EXCEPT AS NOTED BELOW.
    ALL CONCRETE EXPOSED TO EARTH (FOUNDATIONS, ETC.): (F0, S0, W0, C1)
    ALL CONCRETE EXPOSED TO WEATHER: (F1, S0, W0, C1)
    SEE SPECIFICATIONS FOR SHRINKAGE REDUCING CONCRETE MIX CRITERIA WHERE INDICATED ON DRAWINGS. CONCRETE MIXES SHALL MEET OR EXCEED THE REQUIREMENTS SPECIFIED ABOVE. MIXES SHALL BE SUBMITTED TO THE ENGINEER AND BUILDING OFFICIAL FOR APPROVAL TWO WEEKS PRIOR TO PLACING ANY CONCRETE AND SHALL INCLUDE THE AMOUNTS OF CEMENT, CEMENTITOUS MATERIAL, FINE AND COARSE AGGREGATE, WATER AND ADMIXTURES, AS WELL AS THE WATER–CEMENT RATIO, SLUMP, CONCRETE YIELD AND SUBSTANTIATING STRENGTH DATA IN ACCORDANCE WITH ACI 318–14, CHAPTER 26 AND 27. REVIEW OF MIX SUBMITTALS BY THE ENGINEER OF RECORD INDICATES ONLY THAT INFORMATION PRESENTED CONFORMS GENERALLY WITH CONTRACT DOCUMENTS. CONTRACTOR OR SUPPLIER MAINTAINS FULL RESPONSIBILITY FOR SPECIFIED PERFORMANCE.

14. REINFORCING STEEL SHALL CONFORM TO ASTM A615, GRADE 60, fy = 60,000 PSI. GRADE 60 REINFORCING BARS WHICH ARE TO BE WELDED SHALL CONFORM TO ASTM A706. REINFORCEMENT COMPLYING WITH ASTM A615(S1) MAY BE WELDED ONLY IF MATERIAL PROPERTY REPORTS INDICATING CONFORMANCE WITH WELDING PROCEDURES SPECIFIED IN A.W.S. D1.4 ARE SUBMITTED. WELDED WIRE FABRIC SHALL CONFORM TO ASTM A1064.

15. REINFORCING STEEL SHALL BE DETAILED (INCLUDING HOOKS AND BENDS) IN ACCORDANCE WITH ACI 315–99 AND 318–14. LAP ALL CONTINUOUS REINFORCEMENT IN ACCORDANCE WITH "REINFORCEMENT SPLICE AND DEVELOPMENT LENGTH SCHEDULE" OF 10/S3.1. PROVIDE CORNER BARS AT ALL WALL AND FOOTING INTERSECTIONS. LAP ADJACENT MATS OF WELDED WIRE FABRIC A MINIMUM OF 12" AT SIDES AND ENDS. NO BARS PARTIALLY EMBEDDED IN HARDENED CONCRETE SHALL BE FIELD BENT UNLESS OTHERWISE NOTED ON THE DRAWINGS OR APPROVED BY THE STRUCTURAL ENGINEER.

16. CONCRETE PROTECTION (COVER) FOR REINFORCING STEEL SHALL BE AS FOLLOWS:
    FOOTINGS AND OTHER UNFORMED SURFACES
    CAST AGAINST AND PERMANENTLY EXPOSED TO EARTH . . . . 3"
    FORMED SURFACES EXPOSED TO EARTH
    (i.e. WALLS BELOW GROUND)OR WEATHER (#5 BARS OR SMALLER). . . . . 1 ½"

17. BONDING AGENT SHALL BE "MASTEREMACO ADH 326" BY BASF CORPORATION. OR EQUIVALENT, AND SHALL BE USED WHERE NEW CONCRETE IS PLACED AGAINST HARDENED CONCRETE. PLACE IN STRICT ACCORDANCE WITH MANUFACTURER'S INSTRUCTIONS, INCLUDING PREPARATION OF EXISTING SURFACES. CONCRETE SHALL BE CONSIDERED HARDENED AFTER 56 DAYS.

18. NON–SHRINK GROUT SHALL BE FURNISHED BY AN APPROVED MANUFACTURER AND SHALL BE MIXED AND PLACED IN STRICT ACCORDANCE WITH THE MANUFACTURER'S INSTRUCTIONS. GROUT STRENGTH SHALL BE AT LEAST EQUAL TO THE MATERIAL ON WHICH IT IS PLACED (6,000 PSI MINIMUM).

WOOD:

19. FRAMING LUMBER SHALL BE KILN DRIED OR MC–19, AND GRADED AND MARKED IN CONFORMANCE WITH W.C.L.I.B. STANDARD GRADING RULES FOR WEST COAST LUMBER NO. 17 OR W.W.P.A. WESTERN LUMBER GRADING RULES. FURNISH TO THE FOLLOWING MINIMUM STANDARDS:
    PLATES, LEDGERS & MISC. DOUGLAS FIR NO. 3 OR STUD GRADE
    LIGHT FRAMING: MIN. BASIC DESIGN STRESS, F_b = 525 PSI, E = 1400 KSI
    F_c = 775 PSI, F_t = 325 PSI
    JOISTS, BEAMS & POSTS: DOUGLAS FIR NO. 1
    MIN. BASIC DESIGN STRESS, F_b = 1000 PSI, E = 1700 KSI
    F_c = 1500 PSI, F_t = 1000 PSI

20. MANUFACTURED LUMBER SHALL BE AS MANUFACTURED BY TRUS JOIST OR APPROVED EQUAL. REQUESTS FOR APPROVAL AS EQUAL WILL REQUIRE SUBMITTAL OF ICC REPORT EQUIVALENT TO ESR–1387 FOR LAMINATED VENNER LUMBER (LVL, LAMINATED STRAND LUMBER (LSL), OR PARALLEL STRAND LUMBER (PSL). THE MINIMUM ALLOWABLE DESIGN VALUES ARE AS FOLLOWS:
    LVL – F_b = 2,600 F_v = 290 PSI E = 2,000,000 PSI
    LSL – F_b = 1,900 F_v = 150 PSI E = 1,300,000 PSI

21. ENGINEERED WOOD I–JOISTS SHALL BE FURNISHED AND INSTALLED IN CONFORMANCE WITH THE MANUFACTURER'S INSTRUCTIONS. ALL NECESSARY BRIDGING, BLOCKING, BLOCKING PANELS, STIFFENERS, ETC., SHALL BE DETAILED AND FURNISHED BY THE MANUFACTURER. PERMANENT AND TEMPORARY BRIDGING SHALL BE INSTALLED IN CONFORMANCE WITH MANUFACTURER'S INSTRUCTIONS. ALL JOIST HANGERS AND OTHER HARDWARE SHALL BE COMPATIBLE IN SIZE WITH ENGINEERED WOOD I–JOISTS PROVIDED. DESIGN SHOWN ON THE DRAWINGS IS BASED ON RESIDENTIAL JOISTS MANUFACTURED BY WEYERHAUSER IN ACCORDANCE WITH ICC–ES REPORT NO. ESR–1153. ALTERNATE ENGINEERED WOOD I–JOISTS MAY BE USED SUBJECT TO REVIEW AND APPROVAL BY THE STRUCTURAL ENGINEER OF RECORD

22. GLUED LAMINATED MEMBERS SHALL BE FABRICATED IN CONFORMANCE WITH ASTM AND A.I.T.C. STANDARDS IN ACCORDANCE WITH IBC SECTION 2303.1.3. EACH MEMBER SHALL BEAR AN A.I.T.C. IDENTIFICATION MARK AND SHALL BE ACCOMPANIED BY AN A.I.T.C. CERTIFICATE OF CONFORMANCE. HORIZONTAL MEMBERS AND INCLINED MEMBERS OF LESS THAN 1:1 SLOPE SHALL HAVE A RADIUSED CAMBER OF 3,500 FT. UNLESS OTHERWISE NOTED.
    SIMPLE SPAN BEAMS DOUGLAS FIR COMBINATION 24F–VR
    F_b = 2400 PSI; F_v = 265 PSI; E = 1,800,000 PSI
    GLUED LAMINATED MEMBERS EXPOSED TO WEATHER OR MOISTURE SHALL BE TREATED WITH A NON–CORROSIVE, APPROVED PRESERVATIVE.

23. PREFABRICATED CONNECTOR PLATE WOOD ROOF TRUSSES SHALL BE DESIGNED BY THE MANUFACTURER IN ACCORDANCE WITH ANSI/TPI I–2007 AND IBC SECTION 2303.4 FOR THE SPANS AND CONDITIONS SHOWN ON THE DRAWINGS.
    DESIGN LOADS SHALL BE AS FOLLOWS:
    TOP CHORD LIVE LOAD 25 PSF, SNOW + 5 PSF, RAIN ON SNOW SURCHARGE
    BOTTOM CHORD LIVE LOAD 0 PSF
    TOP CHORD DEAD LOAD 15 PSF
    BOTTOM CHORD DEAD LOAD 5 PSF
    WIND UPLIFT (TOP CHORD) SEE NOTE#2 COMPONENTS & CLADDING ROOF LOADS

    THE TRUSS MANUFACTURER SHALL COORDINATE LOCATIONS AND SUPPORT CONFIGURATIONS OF PLUMBING, MECHANICAL UNITS, DUCTS, AND/OR OTHER MISCELLANEOUS ITEMS WITH THE CONTRACTOR PRIOR TO TRUSS FABRICATION. THE TRUSS MANUFACTURER SHALL DESIGN TRUSSES TO SUPPORT ALL LOADS ASSOCIATED WITH SUCH ITEMS. THE TRUSS SHOP DRAWINGS SHALL INCLUDE ALL DESIGN LOADS AND APPROVED HANGER CONNECTION DETAILS TO TRUSS CHORDS FOR SUPPORT OF HUNG MECHANICAL SYSTEM COMPONENTS AS APPLICABLE.

    WOOD TRUSSES SHALL UTILIZE APPROVED CONNECTOR PLATES (GANGNAIL OR EQUAL). SHOP DRAWINGS AND CALCULATIONS SHALL BE PROVIDED AS A DEFERRED SUBMITTAL TO THE CONTRACTOR AND STRUCTURAL ENGINEER OF RECORD PER GENERAL STRUCTURAL NOTE 13. SHOP DRAWINGS SHALL INDICATE SHAPES, BEARING POINTS, INTERSECTIONS, HIPS, VALLEYS, ETC. EXACT COMPOSITION OF SPECIAL HIP, VALLEY, AND INTERSECTION AREAS (USE OF GIRDER TRUSSES, JACK TRUSSES, STEP–DOWN TRUSSES, ETC.) SHALL BE DETERMINED BY THE MANUFACTURER UNLESS OTHERWISE NOTED ON THE DRAWINGS. THE TRUSS MANUFACTURER SHALL PROVIDE ALL TRUSS–TO–TRUSS BEAM/JOIST CONNECTION DETAILS AND REQUIRED CONNECTION MATERIALS. THE TRUSS MANUFACTURER SHALL DESIGN AND PROVIDE DETAILS FOR ALL TEMPORARY AND PERMANENT TRUSS BRACING AND BRIDGING.

24. ROOF & WALL SHEATHING SHALL BE APA RATED, EXTERIOR OR EXPOSURE 1 PLYWOOD OR ORIENTED STRAND BOARD (OSB) IN CONFORMANCE WITH IBC SECTION 2303.1.5. SHEATHING SHALL BE MANUFACTURED UNDER THE PROVISIONS OF VOLUNTARY PRODUCT STANDARDS DOC PS 1–09, PS 2–10, OR APA PRP–108 PERFORMANCE STANDARDS AND POLICIES FOR STRUCTURAL USE PANELS. SEE DRAWINGS FOR THICKNESS, SPAN RATING, AND NAILING REQUIREMENTS.

25. AT NON–SHEAR WALL EXTERIOR WALLS, UNLESS OTHERWISE NOTED, WALL SHEATHING SHALL BE ½" (NOMINAL) WITH SPAN RATING OF 24/0; WITH 8d @ 6" oc PANEL NAILING (APPLIES TO ALL SHEATHING PANEL EDGES); AND 8d @ 12" oc TO INTERMEDIATE FRAMING.

26. ALL PRESSURE–TREATED (P.T.) WOOD MEMBERS SPECIFIED ON THE DRAWINGS THAT OCCUR ABOVE GROUND AND CONTINUOUSLY PROTECTED FROM MOISTURE (INTERIOR LOCATIONS) SHALL BE PRESSURE–TREATED WITH DOT SODIUM BORATE (SBX) WITHOUT $NaSiO_2$. AT LOCATIONS PERMANENTLY EXPOSED TO WEATHER OR IN CONTACT WITH THE GROUND, WOOD MEMBERS SHALL BE PRESSURE–TREATED WITH ALKALINE COPPER QUAT (ACQ–C FOR DOUGLAS–FIR) PRESERVATIVE UNLESS OTHERWISE NOTED. AMMONIACAL COPPER ZINC ARSENATE (ACZA) PRESERVATIVE OR OTHER PRESERVATIVES WITH AMMONIA CARRIERS, SHALL NOT BE USED.
    GLUED LAMINATED MEMBERS EXPOSED TO WEATHER OR MOISTURE SHALL BE TREATED WITH A NON–CORROSIVE, APPROVED PRESERVATIVE.
    SEE NOTE #27 FOR MATERIAL REQUIREMENTS OF CONNECTORS AND FASTENERS IN CONTACT WITH PRESSURE–TREATED MEMBERS.

27. TIMBER CONNECTORS CALLED OUT BY LETTERS AND NUMBERS SHALL BE "STRONG–TIE" BY SIMPSON COMPANY, AS SPECIFIED N THEIR WOOD CONSTRUCTION CONNECTORS CATALOG NO. C–C–2017–18. INSTALL NUMBER AND SIZE OF FASTENERS AS SPECIFIED BY MANUFACTURER. CONNECTORS SHALL BE INSTALLED IN ACCORDANCE WITH THE MANUFACTURER'S INSTRUCTIONS. WHERE CONNECTOR STRAPS CONNECT TWO MEMBERS, CENTER STRAP ON JOINT AND INSTALL NUMBER AND SIZE OF FASTENERS AS SPECIFIED BY MANUFACTURER, WITH EQUAL NUMBER AND SIZE OF FASTENERS IN EACH MEMBER. ALL BOLTS IN WOOD MEMBERS SHALL CONFORM TO ASTM A307. INSTALL WASHERS UNDER THE HEADS AND NUTS OF ALL BOLTS AND LAG SCREWS BEARING ON WOOD. ALL SHIMS SHALL BE SEASONED AND DRIED AND THE SAME GRADE (MINIMUM) AS MEMBERS CONNECTED.

    ALL TIMBER CONNECTORS IN CONTACT WITH PRESSURE–TREATED WOOD THAT USED PRESERVATIVE CHEMICALS OTHER THAN DOT SODIUM BORATE (SBX) WITHOUT $NaSiO_2$ SHALL BE MANUFACTURED FROM Z_{MAX} STEEL BY SIMPSON (G185 STEEL PER ASTM A653), OR TYPE 304 OR 316 STAINLESS STEEL. ALTERNATIVELY, CONNECTORS CAN BE POST HOT DIP GALVANIZED PER ASTM A123 OR MECHANICALLY GALVANIZED PER ASTM B695, CLASS 55 OR GREATER. STAINLESS STEEL FASTENERS SHALL BE USED WITH STAINLESS STEEL CONNECTORS, AND HOT DIP GALVANIZED FASTENERS PER ASTM A153 SHALL BE USED WITH GALVANIZED CONNECTORS.

28. WOOD FRAMING NOTES: THE FOLLOWING SHALL APPLY UNLESS OTHERWISE NOTED ON THE DRAWINGS:
    A. ALL WOOD FRAMING DETAILS SHALL BE CONSTRUCTED TO THE MINIMUM STANDARDS OF THE IBC. MINIMUM NAILING SHALL CONFORM TO IBC TABLE 2304.9.1 OR CURRENT ICC–ES REPORT NER–272. COORDINATE THE SIZE AND LOCATION OF ALL OPENINGS WITH MECHANICAL AND ARCHITECTURAL DRAWINGS. INSTALL WASHERS UNDER THE HEADS AND NUTS OF ALL BOLTS AND LAG SCREWS BEARING ON WOOD. INSTALLATION OF LAG SCREWS SHALL CONFORM TO 2012 NDS SECTION 11.1.4, AND INSTALLATION OF BOLTS SHALL CONFORM TO 2012 NDS SECTION 11.1.3.

    B. WALL FRAMING: TWO STUDS MINIMUM SHALL BE INSTALLED AT THE ENDS OF ALL WALLS, UNLESS NOTED OTHERWISE NOTED. INSTALL SOLID BLOCKING FOR WOOD COLUMN THROUGH FLOOR SPACES TO SUPPORTS BELOW.

    ALL STUD WALLS SHALL HAVE THEIR LOWER WOOD PLATES ATTACHED TO WOOD FRAMING BELOW WITH 16d NAILS @ 12" oc STAGGERED OR BOLTED TO CONCRETE WITH ⅝"ø ANCHOR BOLTS @ 4'–0" oc PER IBC SECTION 2308.6 (EMBED 7"), UNLESS OTHERWISE NOTED. 3" x 3" x 0.229" PLATE WASHERS SHALL BE USED WITH ALL SILL PLATE ANCHOR BOLTS AND INSTALLED PER AF&PA SDPWS–2008 SECTION 4.3.6.4.3. INDIVIDUAL MEMBERS OF BUILT–UP STUD POSTS SHALL BE NAILED TO EACH OTHER WITH 16d @ 12" oc STAGGERED.

    C. FLOOR AND ROOF FRAMING: INSTALL SOLID BLOCKING AT ALL BEARING POINTS. TOENAIL JOISTS TO SUPPORTS WITH (2)16d NAILS. ATTACH TIMBER JOISTS TO FLUSH HEADERS OR BEAMS WITH SIMPSON METAL JOIST HANGERS IN ACCORDANCE WITH NOTES ABOVE. NAIL ALL MULTI–JOIST BEAMS TOGETHER WITH 16d@12"oc STAGGERED.

    ROOF AND FLOOR SHEATHING SHALL BE LAID UP WITH GRAIN PERPENDICULAR TO SUPPORTS AND NAILED AS SHOWN ON THE DRAWINGS. INSTALL APPROVED PANEL EDGE CLIPS CENTERED BETWEEN JOISTS/TRUSSES AT UNBLOCKED ROOF SHEATHING EDGES. ALL FLOOR SHEATHING EDGES SHALL HAVE APPROVED TONGUE–AND–GROOVE JOINTS OR SHALL BE SUPPORTED WITH SOLID BLOCKING ALLOW ⅛" SPACING AT ALL PANEL EDGES AND ENDS OF LOOR AND ROOF SHEATHING. TOENAIL BLOCKING TO SUPPORTS WITH 16d@12"oc. IN ACCORDANCE WITH IBC SECTION 1604.8.3, DECKS SHALL BE POSITIVELY ANCHORED TO THE STRUCTURE BY MEANS OTHER THAN NAILS SUBJECT TO WITHDRAWAL. ANCHOR WITH MINIMUM (1) CS16 STRAP AT EACH END ATTACHED TO DECK JOISTS AND TO A SOLID BLOCKING MEMBER WITHIN THE BUILDING.

POST–INSTALLED ANCHORS AND EPOXY ADHESIVE

29. EPOXY–GROUTED RODS OR REBAR TO CONCRETE SPECIFIED ON THE DRAWINGS SHALL BE ONE OF THE FOLLOWING INSTALLED IN STRICT ACCORDANCE WITH THE ICC–ES REPORTS INDICATED AND MANUFACTURER'S INSTRUCTIONS INCLUDING MINIMUM EMBED REQUIREMENTS: "SET–XP" AS MANUFACTURED BY SIMPSON STRONG–TIE COMPANY, INC. (ICC–ES NO. 2508); OR "HIT–HY 200" AS MANUFACTURED BY HILTI, INC. (ICC–ES NO. 3187), "SAFE–SET" INSTALLATION WITH HOLLOW CARBIDE DRILL BIT IS PERMITTED; OR "PURE110+" AS MANUFACTURED BY DEWALT/POWERS (ICC–ES NO. 3298). SUBSTITUTES PROPOSED BY CONTRACTOR SHALL BE SUBMITTED FOR REVIEW WITH ICC–ES REPORTS INDICATING EQUIVALENT OR GREATER LOAD CAPACITIES. IN ADDITION, SUBSTITUTIONS SHALL MEET ICC–ES ACCEPTANCE CRITERIA AC308. SPECIAL INSPECTION OF EPOXY–GROUTED ANCHOR INSTALLATION IS REQUIRED. EPOXY GROUTED RODS OR REBAR SHALL NOT BE USED AS SUBSTITUTES FOR CAST–IN–PLACE ANCHOR BOLTS OR REINFORCING STEEL UNLESS SPECIFICALLY APPROVED BY THE STRUCTURAL ENGINEER. NOTIFY ENGINEER IF ANCHOR LOCATIONS CONFLICT WITH REINFORCING STEEL – DO NOT CUT REINFORCING OR REDUCE EMBEDMENT DEPTHS WITHOUT PRIOR APPROVAL. INSTALLATION OF ADHESIVE ANCHORS HORIZONTALLY OR UPWARDLY INCLINED TO SUPPORT SUSTAINED TENSION LOADS SHALL BE PERFORMED BY CERTIFIED PERSONNEL IN CONFORMANCE TO ACI 318–14 SECTION 17.8.2.2. HOLES SHALL BE HAMMER DRILLED AND DRY.

30. EXPANSION ANCHORS SHALL BE ONE OF THE APPROVED PRODUCTS BELOW:
    - KWIK BOLT TZ ANCHORS AS MANUFACTURED BY HILTI, INC. AND INSTALLED IN STRICT ACCORDANCE WITH ICC–ES REPORT NO. 1917, OR
    - STRONG–BOLT 2 AS MANUFACTURED BY SIMPSON STRONG–TIE COMPANY, INC. AND INSTALLED IN STRICT ACCORDANCE WITH ICC–ES REPORT NO. 3037

    AND INSTALLED IN STRICT ACCORDANCE WITH MANUFACTURER'S INSTRUCTIONS.

IBC TABLE 1705.3 REQUIRED SPECIAL INSPECTIONS AND TESTS OF CONCRETE CONSTRUCTION

REQUIRED?	VERIFICATION & INSPECTION	CONTINUOUS	PERIODIC	REF STD.	IBC REF.
N*	1. INSPECT REINFORCEMENT, INCLUDING PRESTRESSING TENDONS AND VERIFY PLACEMENT.	---	X	ACI 318 CH. 20, 25.2, 25.3, 26.5.1–26.5.3	1908.4
N	2. REINFORCING BAR WELDING: A. VERIFY WELDABILITY OF REINFORCING BARS OTHER THAN ASTM A 706. B. INSPECT SINGLE–PASS FILLET WELDS, MAXIMUM 5/16"; AND C. INSPECT ALL OTHER WELDS	--- X	X X	AWSD1.4 ACI 318 26.5.4	---
YES	3. INSPECT ANCHORS CAST IN CONCRETE.	---	X	ACI 318: 17.8.2	---
YES	4. INSPECT ANCHORS POST–INSTALLED IN HARDENED CONCRETE MEMBERS. A. ADHESIVE ANCHORS INSTALLED IN HORIZONTALLY OR UPWARDLY INCLINED ORIENTATIONS TO RESIST SUSTAINED TENSION LOADS B. MECHANICAL ANCHORS AND ADHESIVE ANCHORS NOT DEFINED IN 4.A	X	X	ACI 318: 17.8.2.4 ACI 318:17.8.2	---
N*	5. VERIFY USE OF REQUIRED DESIGN MIX.	---	X	ACI 318: CH. 19, 26.4.3, 26.4.4	1904.1, 1904.2, 1908.2, 1908.3
N*	6. PRIOR TO CONCRETE PLACEMENT, FABRICATE SPECIMENS FOR STRENGTH TESTS, PERFORM SLUMP AND AIR CONTENT TESTS, AND DETERMINE THE TEMPERATURE OF THE CONCRETE.	X	---	ASTM C 172 ASTM C 31 ACI 318: 26.4.5, 26.12	1908.10
N*	7. INSPECT CONCRETE AND SHOTCRETE PLACEMENT FOR PROPER APPLICATION TECHNIQUES.	X	---	ACI 318: 26.4.5	1908.6, 1908.7, 1908.8
N*	8. VERIFY MAINTENANCE OF SPECIFIED CURING TEMPERATURE AND TECHNIQUES.	---	X	ACI 318: 26.4.7–26.4.9	1908.9
N	9. INSPECT PRESTRESSED CONCRETE FOR: A. APPLICATION OF PRESTRESSING FORCES; AND B. GROUTING OF BONDED PRESTRESSING TENDONS	X X	--- ---	ACI 318: 26.9.2.1 ACI 218: 26.9.2.3	---
N	10. INSPECT ERECTION OF PRECAST CONCRETE MEMBERS.	---	X	ACI 318: CH. 26.8	---
N*	11. VERIFY IN–SITU CONCRETE STRENGTH, PRIOR TO STRESSING OF TENDONS IN POST–TENSIONED CONCRETE AND PRIOR TO REMOVAL OF SHORES AND FORMS FROM BEAMS AND STRUCTURAL SLABS.	---	X	ACI 318: 26.10.2	---
N*	12. INSPECT FORMWORK FOR SHAPE, LOCATION AND DIMENSIONS OF THE CONCRETE MEMBER BEING FORMED.	---	X	ACI318: 26.10.1(b)	---

* EXCEPTIONS 2 PER IBC SECTION 1705.3 APPLIES TO CONCRETE WORK ON THIS PROJECT.

Minimum Connectors and Fasteners for Wood Members per IBC 2018

DESCRIPTION OF BUILDING ELEMENT	NUMBER AND TYPE OF FASTENERS	SPACING & LOCATION
ROOF		
1. BLOCKING BETWEEN CEILING JOISTS, RAFTERS, OR TRUSSES TO TOP PLATE OR OTHER FRAMING BELOW	3–8d COMMON (2½" x 0.131"); or 3–10d BOX (3" x 0.128"); or 3–3" x 0.131" NAILS; or 3–3" x 14 GAGE STAPLES, 7/16" CROWN	EACH END, TOENAIL
BLOCKING BETWEEN RAFTERS OR TRUSS NOT AT THE WALL TOP PLATE, TO RAFTER OR TRUSS	2–8d COMMON (2½" x 0.131") 2–3" x 0.131" NAILS 2–3" x 14 GAGE STAPLES	EACH END, TOENAIL
	2–16d COMMON (3½" x 0.162") 3–3" x 0.131" NAILS 3–3" x 14 GAGE STAPLES	END NAIL
FLAT BLOCKING TO TRUSS AND WEB FILLER	16d COMMON (3½" x 0.162") @ 6" oc 3" x 0.131" NAILS @ 6" oc 3" x 14 GAGE STAPLES @ 6" oc	FACE NAIL
2. CEILING JOISTS TO TOP PLATE	3–8d COMMON (2½" x 0.131"); or 3–10d BOX (3" x 0.128"); or 3–3" x 0.131" NAILS; or 3–3" x 14 GAGE STAPLES, 7/16" CROWN	EACH JOIST, TOENAIL
3. CEILING JOIST NOT ATTACHED TO PARALLEL RAFTER, LAPS OVER PARTITION (NO THRUST) (SEE 2308.7.3.1, TABLE 2308.7.3.1)	3–16d COMMON (3½" x 0.162"); or 4–10d BOX (3" x 0.128"); or 4–3" x 0.131" NAILS; or 4–3" x 14 GAGE STAPLES, 7/16" CROWN	FACE NAIL
4. CEILING JOIST ATTACHED TO PARALLEL RAFTER (HEEL JOINT)	PER TABLE 2308.7.3.1	FACE NAIL
5. COLLAR TIE TO RAFTER	3–10d COMMON (3" x 0.148"); or 4–10d BOX (3" x 0.128"); or 4–3" x 0.131" NAILS; or 4–3" x 14 GAGE STAPLES, 7/16" CROWN	FACE NAIL
6. RAFTER OR ROOF TRUSS TO TOP PLATE (SEE 2308.7.5, TABLE 2308.7.5)	3–10d COMMON (3" x 0.148"); or 3–16d BOX (3½" x 0.135"); or 4–10d BOX (3" x 0.128"); or 4–3" x 0.131" NAILS; or 4–3" x 14 GAGE STAPLES, 7/16" CROWN	TOENAIL
7. ROOF RAFTERS TO RIDGE VALLEY OR HIP RAFTERS; OR ROOF RAFTER TO 2" RIDGE BEAM	2–16d COMMON (3½" x 0.162"); or 3–10d BOX (3" x 0.128"); or 3–3" x 0.131 NAILS; or 3–3" x 14 GAGE STAPES, 7/16" CROWN	END NAIL
	3–10d COMMON (3½" x 0.148"); or 3–16d BOX (3½" x 0.135"); or 4–10d BOX (3" x 0.128"); or 4–3" x 0.131 NAILS; or 4–3" x 14 GAGE STAPES, 7/16" CROWN	TOENAIL
WALL		
8. STUD TO STUD (NOT AT SHEARWALL CHORDS)	16d COMMON (3½" x 0.162")"	24" oc FACE NAIL
	10d BOX (3" x 0.128"); or 3" x 0.131" NAILS; or 3–3" x 14 GAGE STAPLES, 7/16" CROWN	16" oc FACE NAIL
9. STUD TO STUD AND ABUTTING STUDS AT INTERSECTION WALL CORNERS	16d COMMON (3½" x 0.162")"; or	16" oc FACE NAIL
	16d BOX (3½" x 0.135")"; or	12" oc FACE NAIL
	3" x 0.131" NAILS; or 3–3" x 14 GAGE STAPLES, 7/16" CROWN	12" oc FACE NAIL
10. BUILT–UP HEADER (2" TO 2" HDR.)	16d COMMON (3½" x 0.162")"; or	16" oc EA. EDGE, FACE NAIL
	16d BOX (3½" x 0.135")	12" oc EA. EDGE, FACE NAIL
11. CONTINUOUS HEADER TO STUD	4–8d COMMON (2½" x 0.131"); or 4–10d BOX (3" x 0.128")	TOENAIL
12. TOP PLATE TO TOP PLATE	16d COMMON (3½" x 0.162"); or	16" oc FACE NAIL
	10d BOX (3" x 0.128"); or 3" x 0.131" NAILS; or 3" x 14 GAGE STAPLES, 7/16" CROWN	12" oc FACE NAIL
13. TOP PLATE TO TOP PLATE, AT END JOINTS	8–16d COMMON (3½" x 0.162"); or 12–10d BOX (3" x 0.128"); or 12–3" x 0.131" NAILS; or 12–3" x 14 GAGE STAPLES, 7/16" CROWN	EACH SIDE OF END JOINT, FACE NAIL (MINIMUM 24" LAP SPLICE LENGTH EA. SIDE OF END JOINT
14. BOTTOM PLATE TO JOIST, RIM JOIST, BAND JOIST, OR BLOCKING NOT AT SHEARWALL	16d COMMON (3½" x 0.162")"; or	16" oc FACE NAIL
	16d BOX (3½" x 0.135")"; or 3" x 0.131" NAILS; or 3" x 14 GAGE STAPLES, 7/16" CROWN	12" oc FACE NAIL
15. BOTTOM PLATE TO JOIST, RIM JOIST, BAND JOIST, OR BLOCKING AT SHEARWALL	2–16d COMMON (3½" x 0.162"); or 3–16d BOX (3½" x 0.135"); or 4–3" x 0.131" NAILS; or 4–3" x 14 GAGE STAPLES, 7/16" CROWN	16" oc FACE NAIL
16. STUD TO TOP OR BOTTOM PLATE	4–8d COMMON (2½" x 0.131"); or 4–10d BOX (3" x 0.128"); or 4–3" x 0.131" NAILS; or 4–3" x 14 GAGE STAPLES, 7/16" CROWN	TOENAIL
	2–16d COMMON (3½" x 0.162"); or 3–10d BOX (3" x 0.128"); or 3–3" x 0.131" NAILS; or 3–3" x 14 GAGE STAPLES, 7/16" CROWN	END NAIL
17. TOP OR BOTTOM PLATE TO STUD	2–16d COMMON (3½" x 0.162"); or 3–10d BOX (3" x 0.128"); or 3–3" x 0.131" NAILS; or 3–3" x 14 GAGE STAPLES, 7/16" CROWN	END NAIL
18. TOP PLATES, LAPS AT CORNERS AND INTERSECTIONS	2–16d COMMON (3½" x 0.162"); or 3–10d BOX (3" x 0.128"); or 3–3" x 0.131" NAILS; or 3–3" x 14 GAGE STAPLES, 7/16" CROWN	FACE NAIL
19. 1" BRACE TO EACH STUD AND PLATE	2–8d COMMON (2½" x 0.131"); or 2–10d BOX (3" x 0.128"); or 2–3" x 0.131" NAILS; or 2–3" x 14 GAGE STAPLES, 7/16" CROWN	FACE NAIL
20. 1" x 6" SHEATHING TO EACH BEARING	2–8d COMMON (2½" x 0.131"); or 2–10d BOX (3" x 0.128"); or	FACE NAIL
21. 1" x 8" AND WIDER SHEATHING TO EACH BEARING	3–8d COMMON (2½" x 0.131"); or 3–10d BOX (3" x 0.128"); or	FACE NAIL

DESCRIPTION OF BLDG. ELEMENT	NUMBER AND TYPE OF FASTENERS	SPACING & LOCATION
FLOOR		
22. JOIST TO SILL, TOP PLATE, OR GIRDER	3–8d COMMON (2½" x 0.131"); or 3–10d BOX (3" x 0.128"); or 3–3" x 0.131" NAILS; or 3–3" x 14 GAGE STAPLES, 7/16" CROWN	TOENAIL
23. RIM JOIST, BAND JOIST, OR BLOCKING TO TOP PLATE, SILL, OR OTHER FRAMING BELOW	8d COMMON (2½" x 0.131"); or 10d BOX (3" x 0.128"); or 3" x .131" NAILS; r 3" x 14 GAGE STAPLES, 7/16" CROWN	6" o.c., TOENAIL
24. 1" x 6" SUBFLOOR OR LESS TO EACH JOIST	2–8d COMMON (2½" x 0.131"); or 2–10d BOX (3" x 0.128")	FACE NAIL
25. 2" SUBFLOOR TO JOIST OR GIRDER	2–16d COMMON (3½" x 0.162")	FACE NAIL
26. 2" PLANKS (PLANK & BEAM – FLOOR & ROOF)	2–16d COMMON (3½" x 0.162")"	EA. BEARING, FACE NAIL
27. BUILT–UP GIRDERS AND BEAMS, 2" LUMBER LAYERS	20d COMMON (4" x 0.192")	32" o.c., FACE NAIL TOP & BOT. STAGGERED ON OPPOSITE SIDES
	10d BOX (3" x 0.128"); or 3" x 0.131" NAILS; or 3" x 14 GAGE STAPLES, 7/16" CROWN	24" o.c., FACE NAIL AT TOP & BOT. STAGGERED ON OPP. SIDES
	AND: 2–20d COMMON (4" x 0.192"); or 3–10d BOX (3" x 0.128"); or 3–3" x 0.131" NAILS; or 3–3" x 14 GAGE STAPLES, 7/16" CROWN	ENDS AND AT EACH SPLICE, FACE NAIL
28. LEDGER STRIP SUPPORTING JOISTS OR RAFTERS	3–16d COMMON (3½" x 0.162"); or 4–10d BOX (3" x 0.128"); or 4–3" x 0.131" NAILS; or 4–3" x 14 GAGE STAPLES, 7/16" CROWN	EACH JOIST OR RAFTER, FACE NAIL
29. JOIST TO BAND JOIST OR RIM JOIST	3–16d COMMON (3½" x 0.162"); or 4–10d BOX (3" x 0.128"); or 4–3" x 0.131" NAILS; or 4–3" x 14 GAGE STAPLES, 7/16" CROWN	END NAIL
30. BRIDGING OR BLOCKING TO JOIST, RAFTER, OR TRUSS	2–8d COMMON (2½" x 0.131"); or 2–10d BOX (3" x 0.128"); or 2–3" x 0.131" NAILS; or 2–3" x 14 GAGE STAPLES, 7/16" CROWN	EACH END, TOENAIL

9317 REGISTERED ARCHITECT
CHRIS LUTHI
STATE OF WASHINGTON

CENTERLINE
DESIGN
4737 37th AVE SW
SEATTLE
206.932.8706
www.Centerline-Design.com

ATLAS
CONSULTING
STRUCTURAL
ENGINEERS

53159

Derakshani Residence
8151 SE 48th St
Mercer Island, WA - 98040

CONTENTS
General
Structural
Notes

DRAWN BY
JDA
DATE
04.01.21
09.29.21

S1.1

LEGEND

- REINFORCED CONCRETE WALL
- REINFORCED CONCRETE FOOTING
- EXISTING CONCRETE FOOTING
- STRUCTURAL WOOD STUDWALL ABOVE
- EXISTING STRUCTURAL WOOD STUDWALL ABOVE
- POST ABOVE
- EXISTING POST ABOVE
- SW-_ — DENOTES EXTENT OF SHEARWALL TYPE SW-_ PER 1/S6.5
- SW-* — DENOTES STRAPPED SHEARWALL PER 7/S6.5, WITH * DENOTING LOCATION OF STRAP ABOVE & BELOW OPENING
- HDU_ / MSTC_ — DENOTES SHEARWALL TENSION TIE PER 4/S6.5
  - * – DENOTES TRANSFER TIE FROM TIE ABOVE
  - ^ – DENOTES TIE ATOP FRAMING MEMBER
  - ⊗ – DENOTES TIE AT EXIST. CONC. w/ EPOXY
- CU_ — DENOTES CUSTOM TENSION TIE INTO EXIST. CONC. w/ EPOXY PER 7/S6.5
- xx'-xx" — DENOTES BOTTOM OF FOOTING ELEVATION

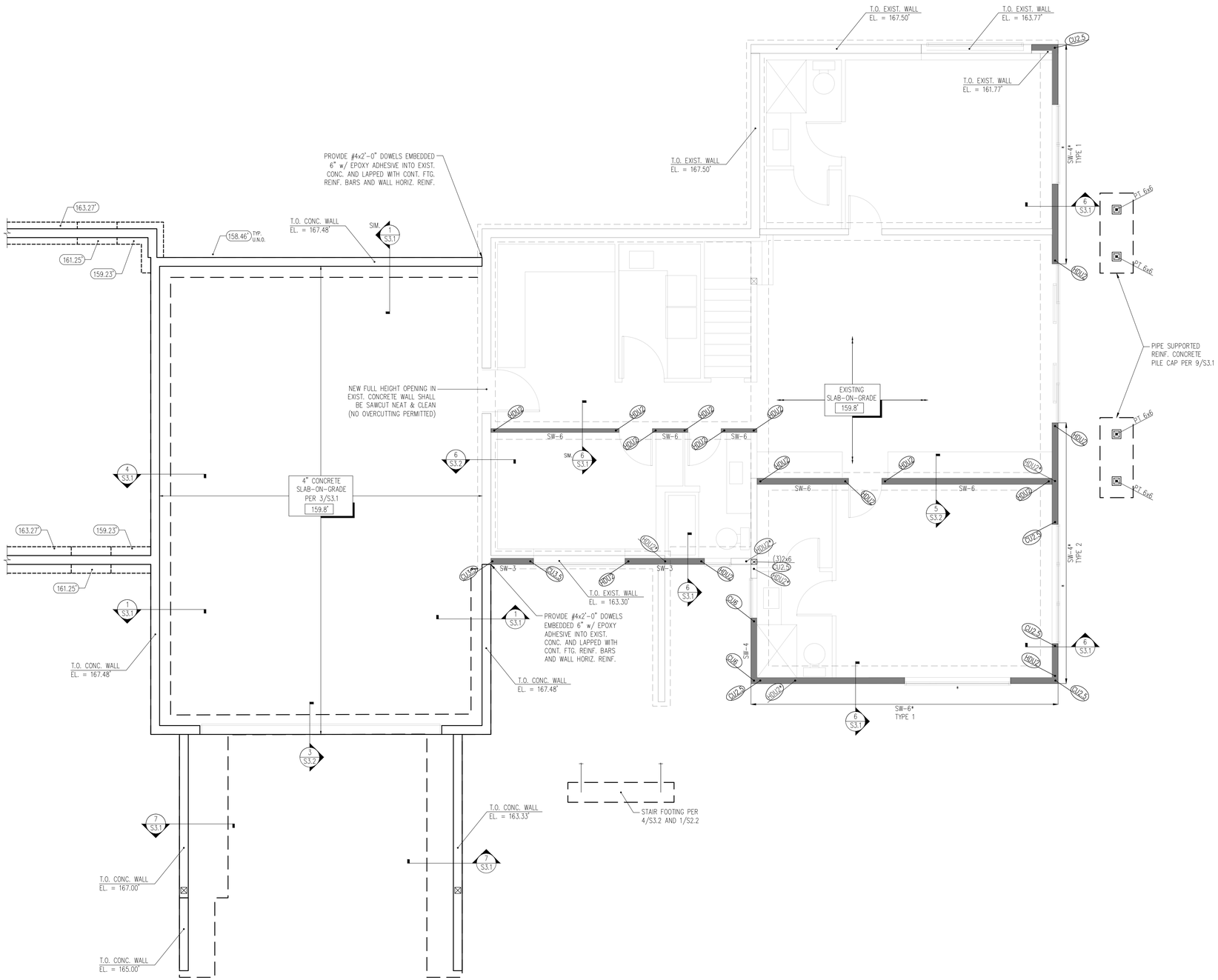

1 / S2.1 FOUNDATION AND BASEMENT FLOOR PLAN

1/4" = 1'-0"

NORTH

REGISTERED ARCHITECT 9317 CHRIS LUTHI STATE OF WASHINGTON

CENTERLINE DESIGN
4737 37th AVE SW
SEATTLE
206.932.8706
www.Centerline-Design.com

ATLAS CONSULTING STRUCTURAL ENGINEERS

STATE OF WASHINGTON 53159 STRUCTURAL ENGINEER JAVID ALI DANISHMANDI

Derakshani Residence
8151 SE 48th St
Mercer Island, WA - 98040

CONTENTS

Foundation Plan

DRAWN BY

JDA

DATE

04.01.21
09.29.21

S2.1

LEGEND

- REINFORCED CONCRETE WALL
- REINFORCED CONCRETE WALL BELOW
- EXISTING CONCRETE WALL BELOW
- STRUCTURAL WOOD STUDWALL ABOVE
- STRUCTURAL WOOD STUDWALL BELOW
- EXISTING STRUCTURAL WOOD STUDWALL BELOW
- EXISTING CONCRETE FOOTING
- WOOD JOIST
- EXISTING WOOD JOIST
- WOOD BEAM or HEADER
- EXISTING WOOD BEAM or HEADER
- WOOD RAFTER
- CONNECTOR PLATE WOOD TRUSSES
- POST ABOVE
- POST BELOW
- STRAP x LENGTH — DENOTES STRAP TYPE BY LENGTH, CENTERED ON ABUTTING ELEMENTS
- SW-_ — DENOTES EXTENT OF SHEARWALL TYPE SW-_ PER 1/S6.5
- SW-_* — DENOTES STRAPPED SHEARWALL PER 7/S6.5, WITH * DENOTING LOCATION OF STRAP ABOVE & BELOW OPENING
- HDU_ / MSTC_ — DENOTES SHEARWALL TENSION TIE PER 4/S6.5
  - * - DENOTES TRANSFER TIE FROM TIE ABOVE
  - ^ - DENOTES TIE ATOP FRAMING MEMBER
  - DENOTES TIE AT EXIST. CONC. w/ EPOXY
- GL_ — DENOTES CUSTOM TENSION TIE INTO EXIST. CONC. w/ EPOXY PER 7/S6.5

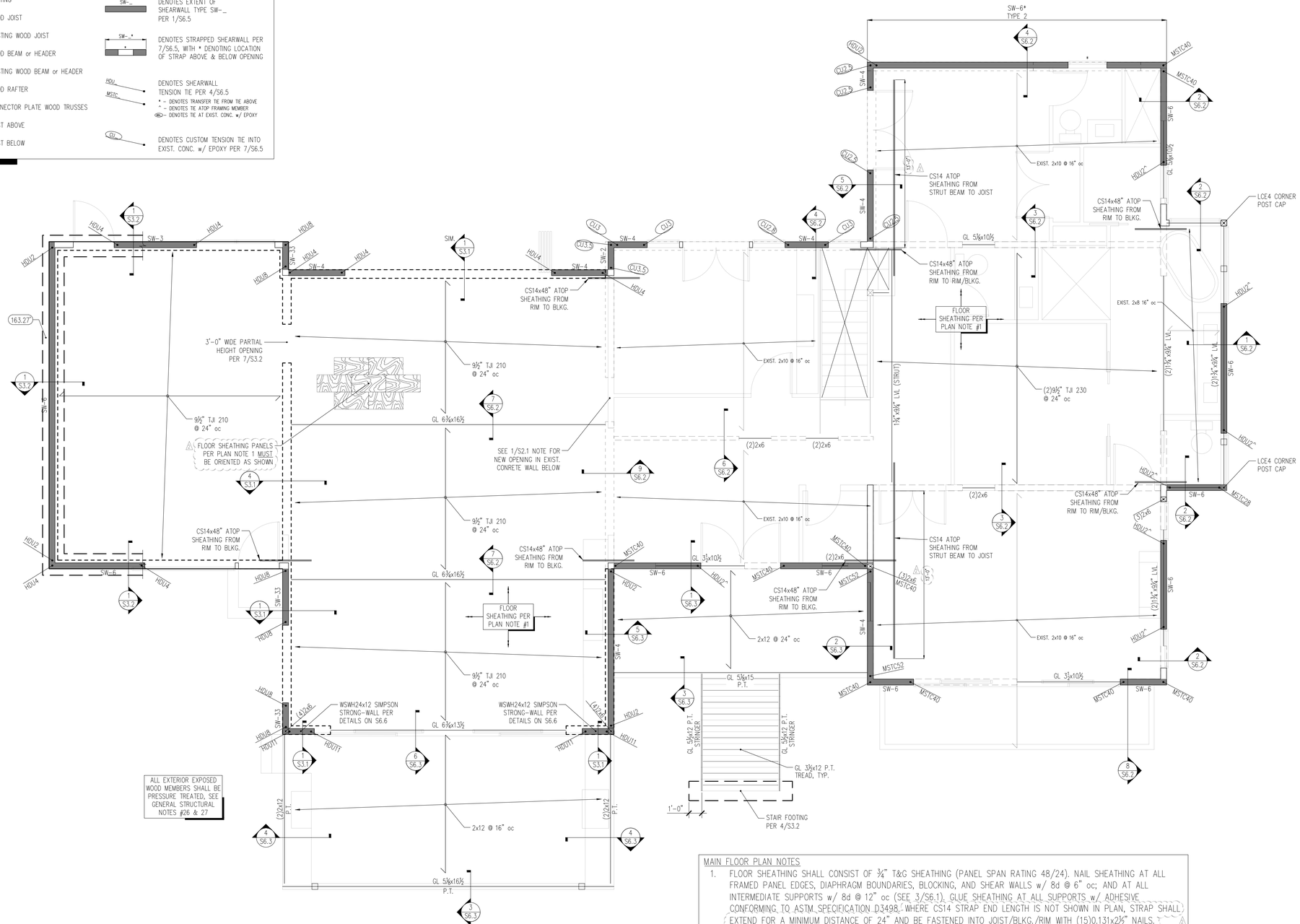

MAIN FLOOR PLAN NOTES

1. FLOOR SHEATHING SHALL CONSIST OF ¾" T&G SHEATHING (PANEL SPAN RATING 48/24). NAIL SHEATHING AT ALL FRAMED PANEL EDGES, DIAPHRAGM BOUNDARIES, BLOCKING, AND SHEAR WALLS w/ 8d @ 6" oc; AND AT ALL INTERMEDIATE SUPPORTS w/ 8d @ 12" oc (SEE 3/S6.1). GLUE SHEATHING AT ALL SUPPORTS w/ ADHESIVE CONFORMING TO ASTM SPECIFICATION D3498. WHERE CS14 STRAP END LENGTH IS NOT SHOWN IN PLAN, STRAP SHALL EXTEND FOR A MINIMUM DISTANCE OF 24" AND BE FASTENED INTO JOIST/BLKG./RIM WITH (15)0.131x2½" NAILS. △1
2. EXTERIOR STUDWALLS SHALL BE 2x6 STUDS @ 16" oc. SEE 6/6.1, 5/S6.1, AND 2/S6.1 FOR ALLOWABLE HOLES & NOTCHES IN STUDWALL STUDS AND TOP & BOTTOM PLATES.
3. SEE 8/S6.1 FOR CONNECTION DETAILS OF INTERIOR NON-STRUCTURAL PARTITION WALLS.
4. SOLID WALLS AND SHEARWALLS SHOWN IN PLAN ARE ABOVE FRAMING (i.e. FROM MAIN FLOOR LEVEL TO UPPER FLOOR/ROOF LEVEL).
   DASHED WALLS SHOWN IN PLAN ARE LOAD-BEARING ELEMENTS BELOW FRAMING (i.e. FROM FOUNDATION/LOWER FLOOR TO MAIN FLOOR).
   JOISTS AND BEAMS SHOWN IN PLAN ARE AT MAIN FLOOR ELEVATION.
5. SEE GENERAL STRUCTURAL NOTE #20 ON S1.0 FOR ENGINEERED LUMBER REQUIREMENTS.
6. ALL HEADERS/BEAMS SHALL HAVE A MINIMUM OF (2)2x POSTS AND (1)FULL HEIGHT TRIMMER STUD, U.N.O. IN PLAN (STUD DEPTH SHALL MATCH DEPTH OF THE WALL)

1 / S2.2 MAIN FLOOR FRAMING PLAN
1/4" = 1'-0"

NORTH

9317 REGISTERED ARCHITECT CHRIS LUTHY STATE OF WASHINGTON

CENTERLINE DESIGN
4737 37th AVE SW
SEATTLE
206.932.8706
www.CenterLine-Design.com

ATLAS CONSULTING STRUCTURAL ENGINEERS
JAMES D. ADAMS III STATE OF WASHINGTON 13159 REGISTERED STRUCTURAL ENGINEER

Derakshani Residence
8151 SE 48th St
Mercer Island, WA - 98040

CONTENTS
Main Floor Framing Plan

DRAWN BY
JDA

DATE
04.01.21
09.29.21
12.03.21 △1

S2.2

LEGEND

- STRUCTURAL WOOD STUDWALL BELOW
- WOOD JOIST
- WOOD BEAM or HEADER
- WOOD RAFTER
- CONNECTOR PLATE WOOD TRUSSES
- POST BELOW
- DENOTES STRAP TYPE BY LENGTH, CENTERED ON ABUTTING ELEMENTS
  - STRAP x LENGTH

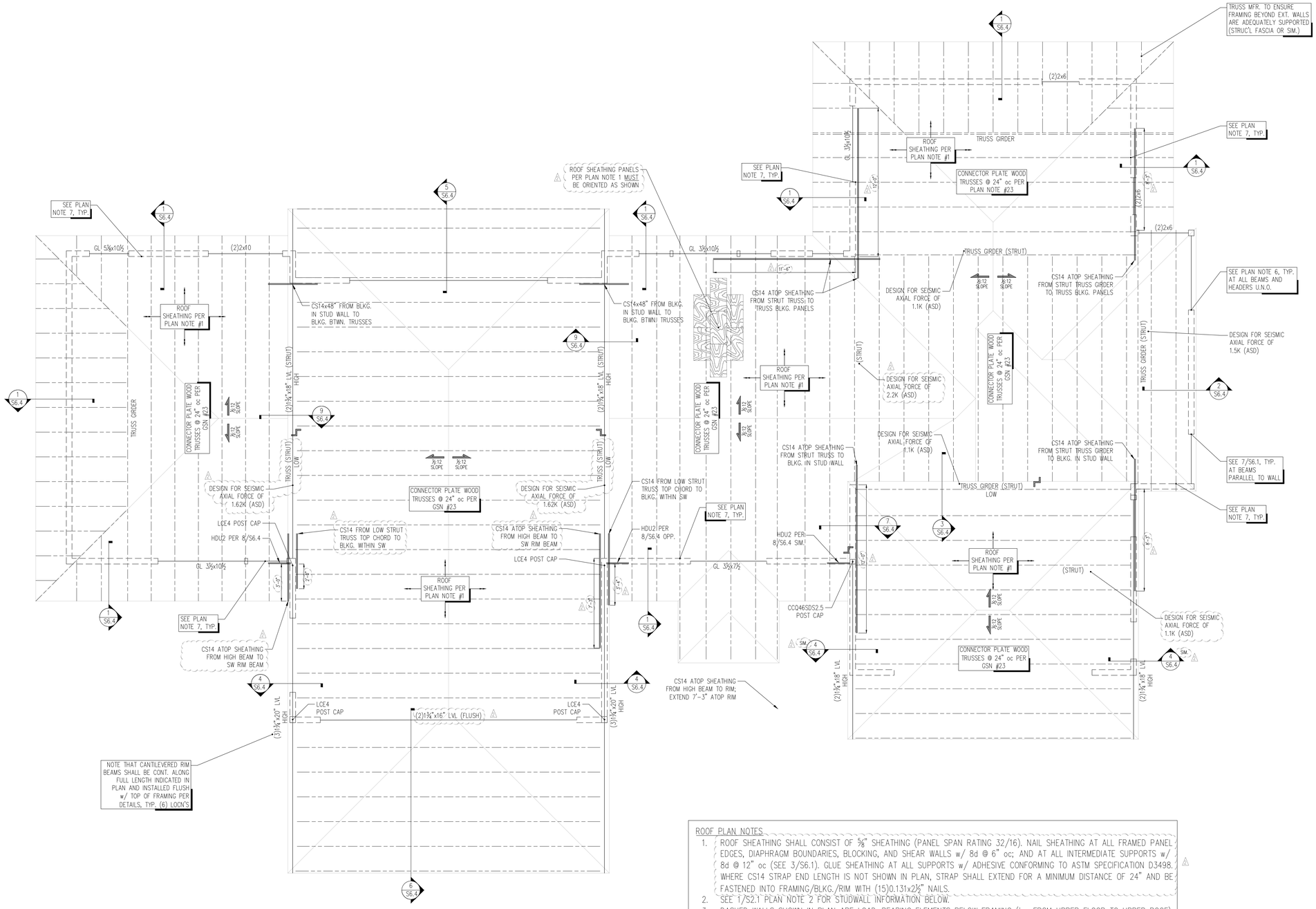

ROOF PLAN NOTES

1. ROOF SHEATHING SHALL CONSIST OF ⅝" SHEATHING (PANEL SPAN RATING 32/16). NAIL SHEATHING AT ALL FRAMED PANEL EDGES, DIAPHRAGM BOUNDARIES, BLOCKING, AND SHEAR WALLS w/ 8d @ 6" oc; AND AT ALL INTERMEDIATE SUPPORTS w/ 8d @ 12" oc (SEE 3/S6.1). GLUE SHEATHING AT ALL SUPPORTS w/ ADHESIVE CONFORMING TO ASTM SPECIFICATION D3498. WHERE CS14 STRAP END LENGTH IS NOT SHOWN IN PLAN, STRAP SHALL EXTEND FOR A MINIMUM DISTANCE OF 24" AND BE FASTENED INTO FRAMING/BLKG./RIM WITH (15)0.131x2½" NAILS.
2. SEE 1/S2.1 PLAN NOTE 2 FOR STUDWALL INFORMATION BELOW.
3. DASHED WALLS SHOWN IN PLAN ARE LOAD-BEARING ELEMENTS BELOW FRAMING (i.e. FROM UPPER FLOOR TO UPPER ROOF). RAFTERS AND BEAMS SHOWN IN PLAN ARE AT UPPER ROOF ELEVATION.
4. SEE GENERAL STRUCTURAL NOTE #20 ON S1.0 FOR ENGINEERED LUMBER REQUIREMENTS.
5. PROVIDE H2.5A HURRICANE TIES AT END OF ALL RAFTERS AND TRUSSES.
   NOTE THAT H2.5A HURRICANE TIES MUST BE OBSERVABLE BY CITY INSPECTOR PRIOR TO INSPECTION APPROVAL.
6. ALL HEADERS SHALL HAVE A MINIMUM OF (2)2x POSTS AND (1)FULL HEIGHT TRIMMER STUD, U.N.O. IN PLAN (STUD DEPTH SHALL MATCH DEPTH OF THE WALL)

1 / S2.3 ROOF FRAMING PLAN
1/4" = 1'-0"

NORTH

9317 REGISTERED ARCHITECT CHRIS LUTHI STATE OF WASHINGTON

CENTERLINE DESIGN
4737 37th AVE SW
SEATTLE
206.932.8706
www.Centerline-Design.com

ATLAS CONSULTING STRUCTURAL ENGINEERS

Derakshani Residence
8151 SE 48th St
Mercer Island, WA - 98040

CONTENTS
Roof Framing Plan

DRAWN BY
JDA

DATE
04.01.21
09.29.21
12.03.21

S2.3

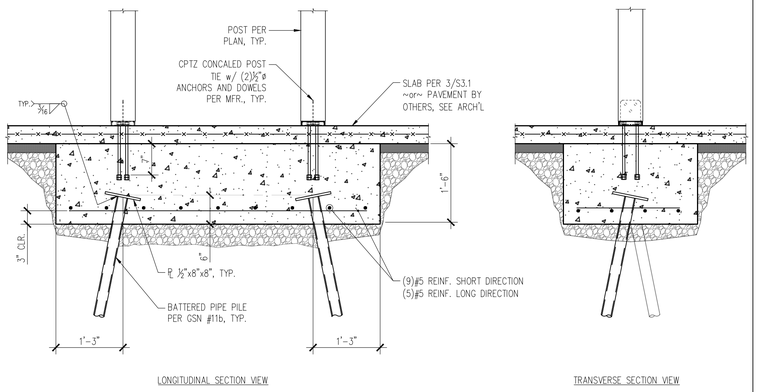

9 / S3.1 PIPE SUPPORTED PILE CAP
3/4" = 1'-0"

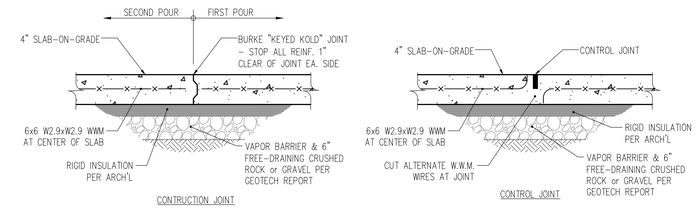

3 / S3.1 TYPICAL SLAB-ON-GRADE JOINTING
1" = 1'-0"

Hsoil	TOE	WIDTH	HEEL	DEPTH	STEM REINF. VERT.	STEM REINF. HORIZ.	FTG. REINF. LONG.	FTG. REINF. BOT.	KEY DEPTH
$H_{soil} \leq 4'-6"$	2'-0"	8"	–	10"	#4 @ 16" oc	#4 @ 12" oc	(3) #4	#4 @ 12" oc	0'-6"
$4'-6" < H_{soil} \leq 5'-6"$	3'-3"	8"	–	10"	#4 @ 10" oc	#4 @ 12" oc	(5) #4	#4 @ 12" oc	1'-0"
$5'-6" < H_{soil} \leq 6'-6"$	4'-3"	8"	–	10"	#5 @ 10" oc	#4 @ 12" oc	(5) #5	#5 @ 16" oc	1'-6"
$5'-6" < H_{soil} \leq 7'-6"$	5'-6"	8"	–	10"	#5 @ 8" oc	#4 @ 12" oc	(5) #5	#5 @ 10" oc	1'-6"
$H_{soil} \leq 8'-6"$	6'-6"	8"	–	12"	#5 @ 6" oc	#4 @ 12" oc	(5) #5	#5 @ 8" oc	2'-0"

SEE 9/S3.2 FOR REINFORCING SPLICE & DEVELOPMENT LENGTH TABLE

SEE DETAIL 4/S6.3 FOR DECK FRAMING AND RAILING DETAIL

NOTE

MAXIMUM HORIZONTAL DESIGN PRESSURE	= 35 PCF
MINIMUM ALLOWABLE BEARING PRESSURE	= 3,000 PSF
COEFFICIENT OF FRICTION	= 0.50 (ULTIMATE)
PASSIVE RESISTANCE	= 300 PCF (ULTIMATE)
MINIMUM FACTOR OF SAFETY, OVERTURNING	= 1.5
MINIMUM FACTOR OF SAFETY, SLIDING	= 1.5
SOIL UNIT WEIGHT	= 130 PCF

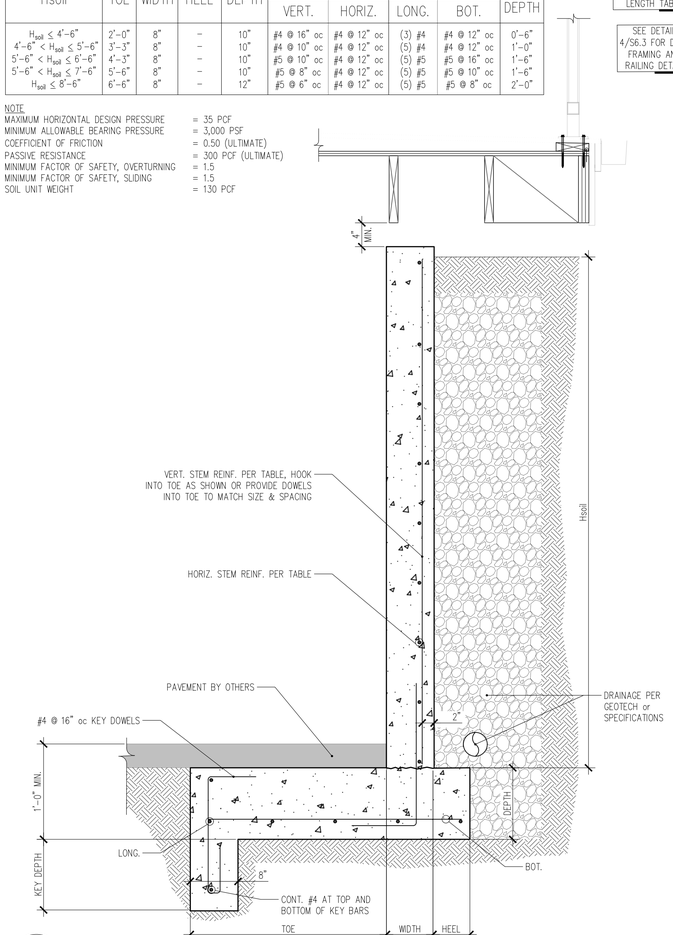

7 / S3.1 RETAINING WALL
1" = 1'-0"

SEE 9/S3.2 FOR REINFORCING SPLICE & DEVELOPMENT LENGTH TABLE

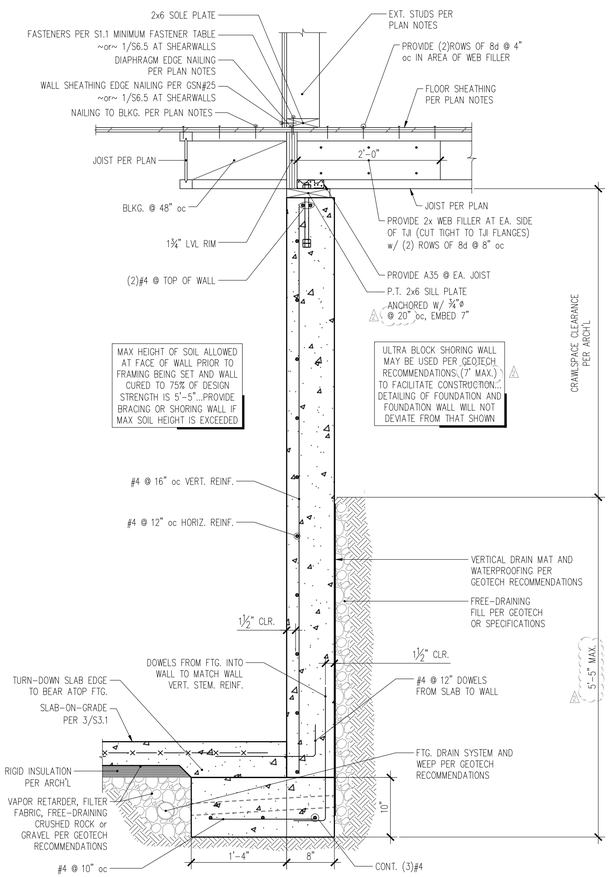

4 / S3.1 SECTION THROUGH FOUNDATION WALL AT BASEMENT SLAB, CRAWLSPACE AND MAIN FLOOR JOISTS
1" = 1'-0"

SEE 9/S3.2 FOR REINFORCING SPLICE & DEVELOPMENT LENGTH TABLE

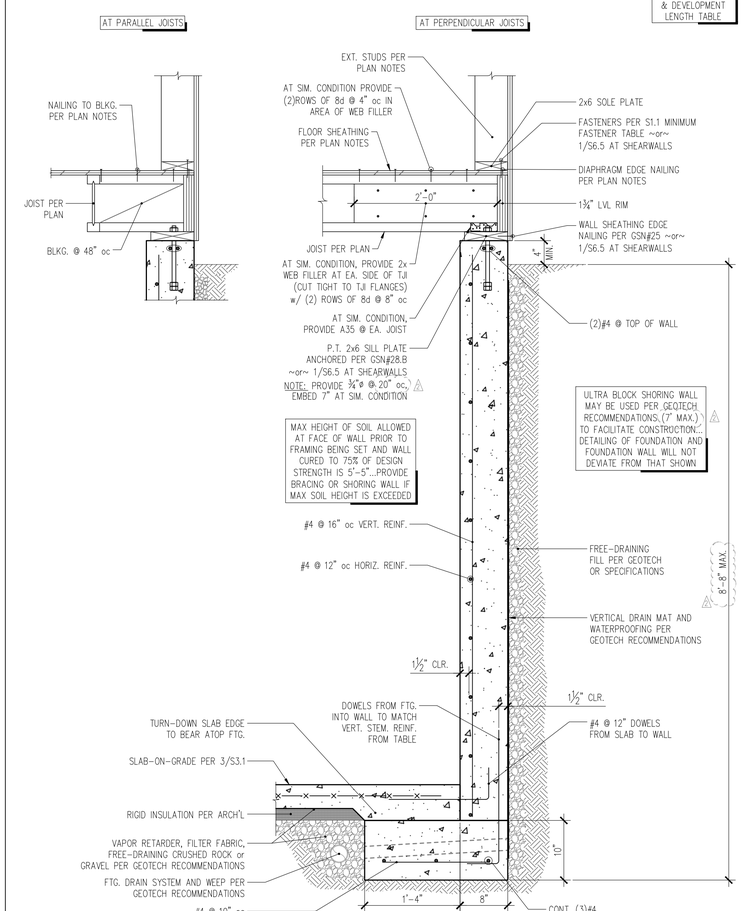

1 / S3.1 SECTION THROUGH FOUNDATION WALL AT BASEMENT SLAB AND MAIN FLOOR JOISTS
1" = 1'-0"

9317 REGISTERED ARCHITECT CHRIS LUTHI STATE OF WASHINGTON

CENTERLINE DESIGN
4737 37th AVE SW
SEATTLE
206.932.8706
www.Centerline-Design.com

ATLAS CONSULTING STRUCTURAL ENGINEERS

Derakshani Residence
8151 SE 48th St
Mercer Island, WA - 98040

CONTENTS
Foundation Details

DRAWN BY
JDA
DATE
04.01.21
09.29.21
12.03.21

S3.1

MIN. STRAIGHT DEVELOPMENT LENGTH		
BAR SIZE	TOP BARS	OTHER BARS
#4	25"	19"
#5	31"	24"

MIN. LAP SPLICE LENGTH (CLASS B)		
BAR SIZE	TOP BARS	OTHER BARS
#4	33"	25"
#5	41"	31"

"TOP BARS" ARE HORIZONTAL BARS WITH MORE THAN 12" DEPTH OF CONCRETE CAST BELOW THEM

IF CLEAR CONCRETE COVER IS LESS THAN 1x THE DIAMETER OF THE BAR OR THE CENTER-TO-CENTER SPACING IS LESS THAN (3) BAR DIAMETERS, THEN VALUES SHALL BE INCREASED BY 50%

MIN. EMBEDMENT LENGTH FOR STANDARD END HOOKS	
BAR SIZE	LENGTH
#4	7"
#5	9"

1. SIDE COVER MUST BE EQUAL TO OR GREATER THAN 2½"
2. END COVER FOR 90° HOOKS MUST BE EQUAL TO OR GREATER THAN 2"

9 / S3.2 CONCRETE REINFORCING DEVELOPMENT AND SPLICE LENGTH TABLES
N/A

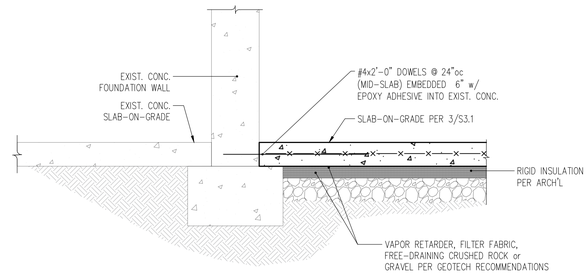

6 / S3.2 SECTION AT NEW SLAB AND EXISTING FOUNDATION WALL
1" = 1'-0"

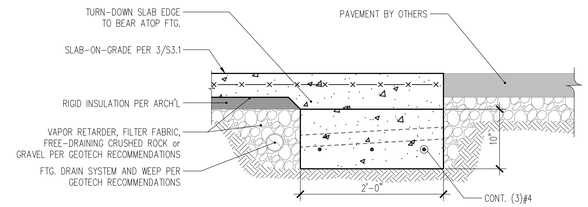

3 / S3.2 SECTION AT GARAGE ENTRANCE
1" = 1'-0"

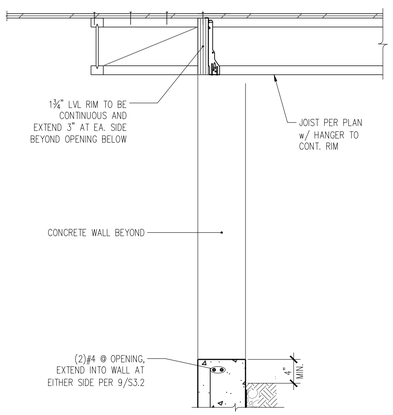

SECTION VIEW

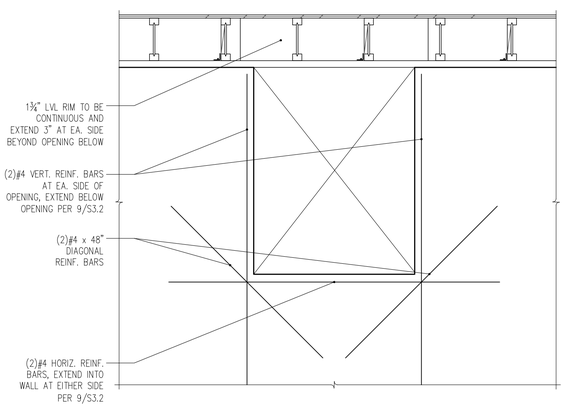

ELEVATION VIEW

7 / S3.2 PARTIAL HEIGHT OPENING IN NEW FOUNDATION WALL
N.T.S.

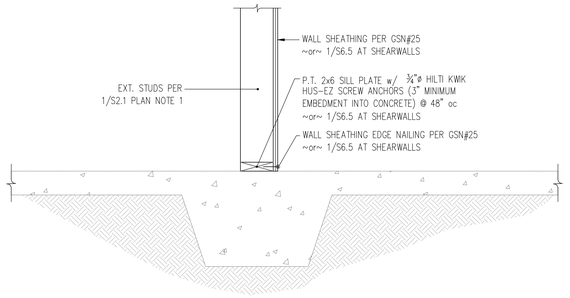

5 / S3.2 NEW SHEAR/BEARING STUD WALL AT EXISTING THICKENED SLAB
1" = 1'-0"

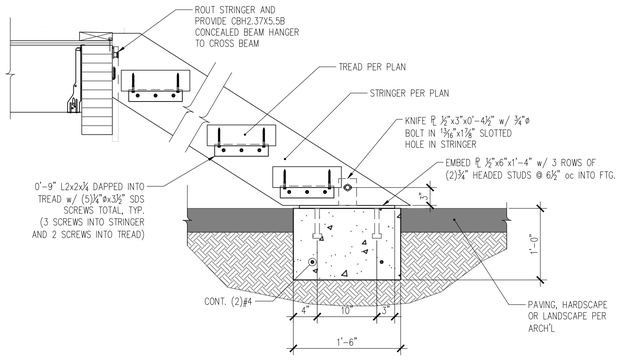

4 / S3.2 SECTION THROUGH FOUNDATION AT STAIR STRINGER
N.T.S.

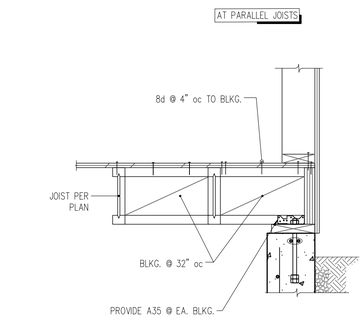

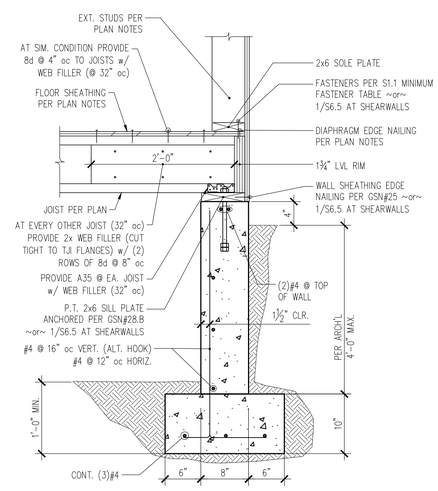

1 / S3.2 SECTION THROUGH FOUNDATION WALL AT CRAWLSPACE
1" = 1'-0"

REGISTERED ARCHITECT
CHRIS LUTHI
STATE OF WASHINGTON

CENTERLINE DESIGN
4737 37th AVE SW
SEATTLE
206.932.8706
www.Centerline-Design.com

ATLAS CONSULTING STRUCTURAL ENGINEERS

Derakshani Residence
8151 SE 48th St
Mercer Island, WA - 98040

CONTENTS
Foundation Details

DRAWN BY
JDA

DATE
04.01.21
09.29.21

S3.2

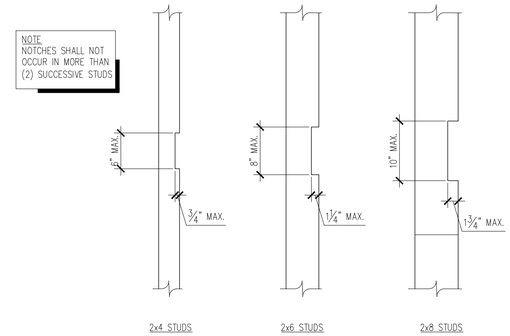

6 / S6.1 ALLOWABLE HOLES IN STUDWALL STUDS
NTS

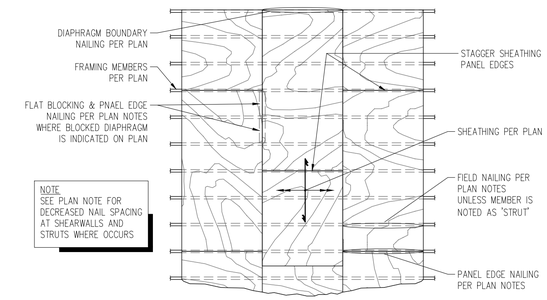

3 / S6.1 TYPICAL DIAPHRAGM NAILING
NTS

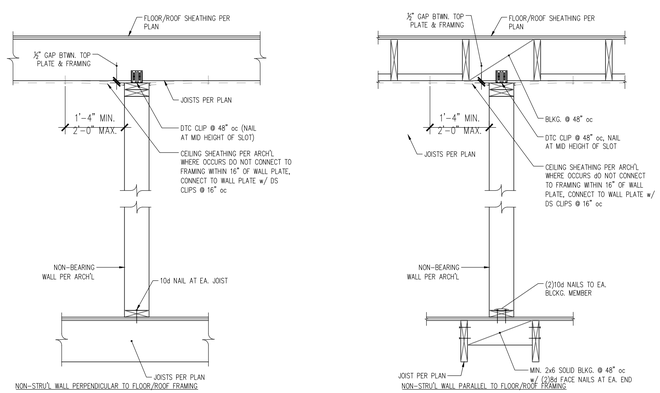

8 / S6.1 CONNECTION OF NON-STRUC'L PARTITION WALL TO STRUCTURE
NTS

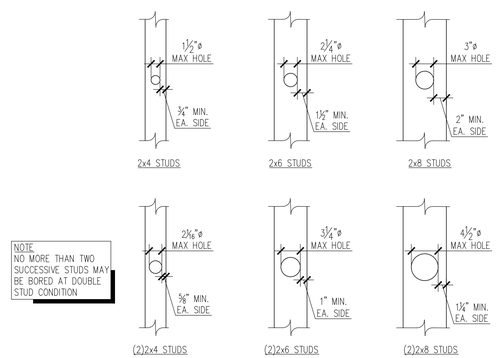

5 / S6.1 ALLOWABLE HOLES IN STUDWALL STUDS
NTS

	NO REINF. REQUIRED	STRAP REINF. REQUIRED
2x4 PLATES	1½"ø MAX. HOLE; ¾" MIN. EA. SIDE	2⅝"ø MAX. HOLE; CMSTC16x3'-0" (CS16x2'-0" AT BOT. PLATES); ⅜" MIN. EA. SIDE
2x6 PLATES	2¼"ø MAX. HOLE; 1½" MIN. EA. SIDE	3¾"ø MAX. HOLE; CMSTC16x3'-0" (CS16x2'-0" AT BOT. PLATES); ¾" MIN. EA. SIDE
2x8 PLATES	3¼"ø MAX. HOLE; 2" MIN. EA. SIDE	5"ø MAX. HOLE; CMSTC16x3'-0" (CS16x2'-0" AT BOT. PLATES); 1¼" MIN. EA. SIDE

2 / S6.1 ALLOWABLE HOLES THROUGH TOP PLATES
NTS

TYPICAL EXTERIOR WALL OPENING FRAMING SCHEDULE			
CLEAR ① HEIGHT "H"	OPENING WIDTH "L"	FULL HEIGHT STUD TO BEAM CONNECTION	FULL HEIGHT STUD TO TOP PLATE CONNECTION
H < 10'	L ≤ 6'-0"	A	D
	6' < L < 10'	A + B	E
	10' ≤ L ≤ 15'	A + B	D + E
	10' ≤ L ≤ 21'	A + C	D + F

A. (4)8d COMMON or (4)10d BOX
B. (1)¼"øx3½" SDS SCREW
C. (2)¼"øx3½" SDS SCREWS
D. (4)8d COMMON or (4)10d BOX (TOENAILED)
E. A34 FRAMING ANGLES
F. (2)A34 FRAMING ANGLES

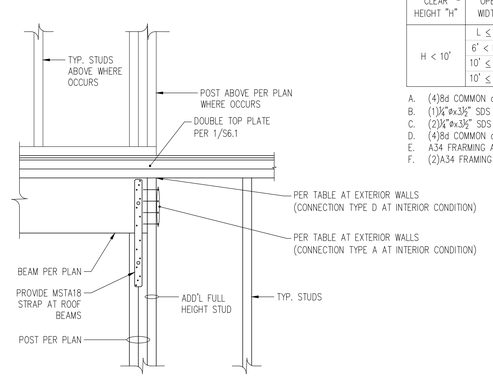

7 / S6.1 TYPICAL BEAM PARALLEL TO WALL
NTS

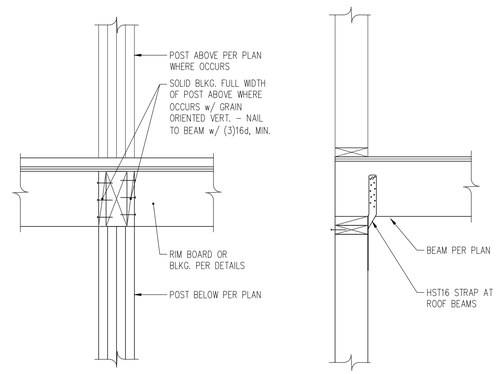

4 / S6.1 TYPICAL BEAM PERPENDICULAR TO WALL
NTS

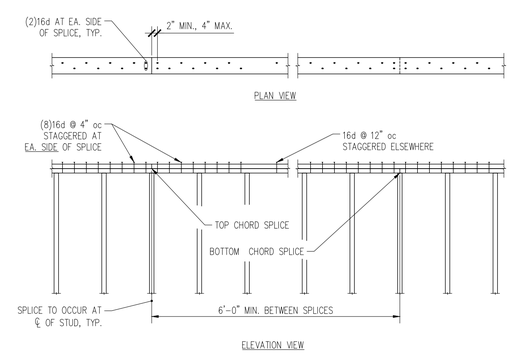

1 / S6.1 TOP PLATE SPLICE
NTS

REGISTERED ARCHITECT
CHRIS LUTHI
STATE OF WASHINGTON
9317

CENTERLINE DESIGN
4737 37th AVE SW
SEATTLE
206.932.8706
www.Centerline-Design.com

ATLAS CONSULTING STRUCTURAL ENGINEERS

Derakshani Residence
8151 SE 48th St
Mercer Island, WA - 98040

CONTENTS
Wood Typical Details

DRAWN BY
JDA

DATE
04.01.21
09.29.21

S6.1

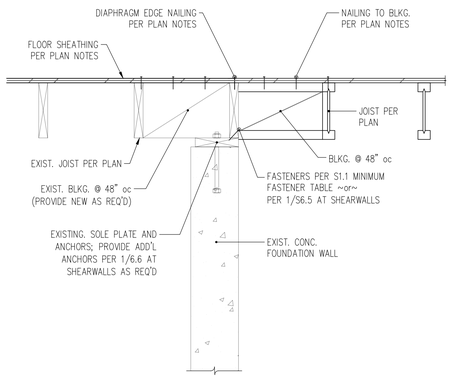

9 / S6.2 SECTION THROUGH INTERIOR SHEAR WALL w/ PERPENDICULAR JOISTS AT EA. SIDE
1" = 1'-0"

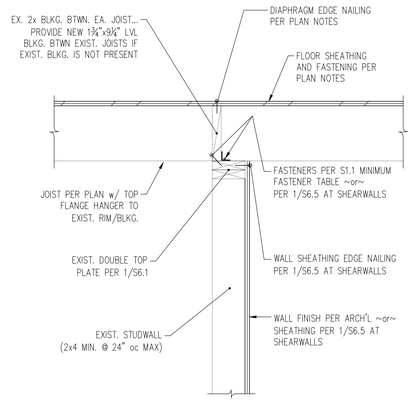

6 / S6.2 SECTION THROUGH INTERIOR SHEAR WALL w/ PERPENDICULAR JOISTS AT EA. SIDE
1" = 1'-0"

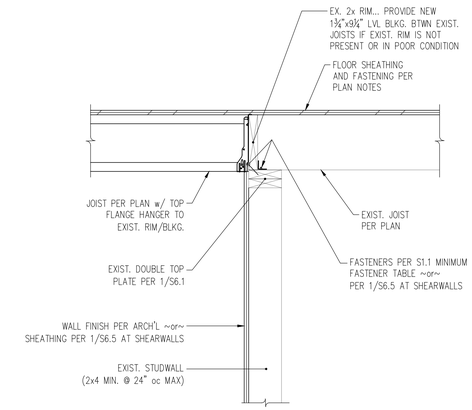

3 / S6.2 SECTION THROUGH INTERIOR BEARING WALL w/ PERPENDICULAR JOISTS AT EA. SIDE
1" = 1'-0"

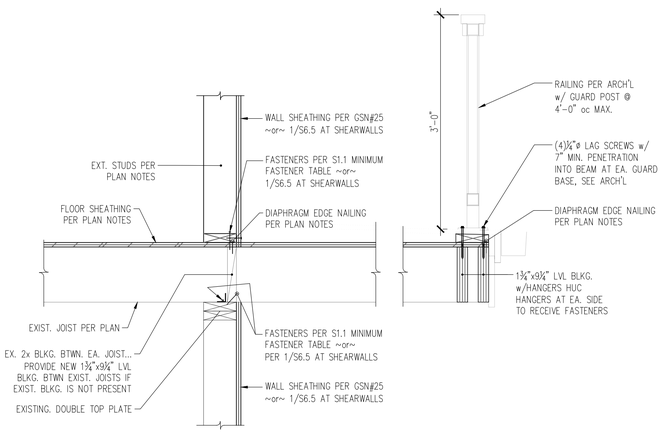

8 / S6.2 SECTION THROUGH BEAM SUPPORTING SHEARWALL ABOVE
1" = 1'-0"

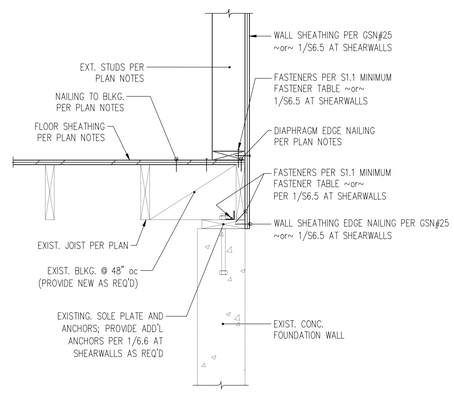

5 / S6.2 SECTION THROUGH EXTERIOR FOUNDATION WALL AT EXISTING PARALLEL JOISTS
1" = 1'-0"

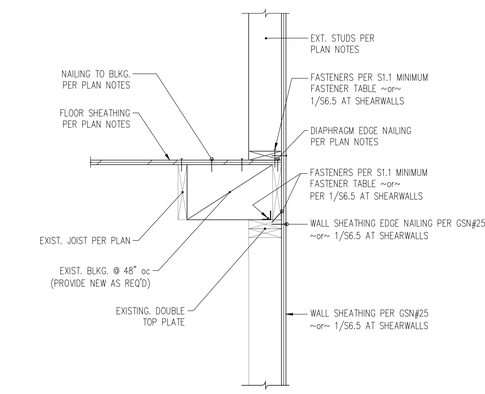

2 / S6.2 SECTION THROUGH EXTERIOR WALL AT EXISTING PARALLEL JOISTS
1" = 1'-0"

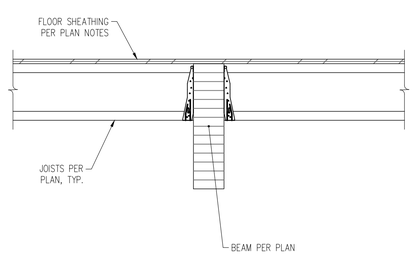

7 / S6.2 SECTION THROUGH BEAM SUPPORTING JOISTS
1" = 1'-0"

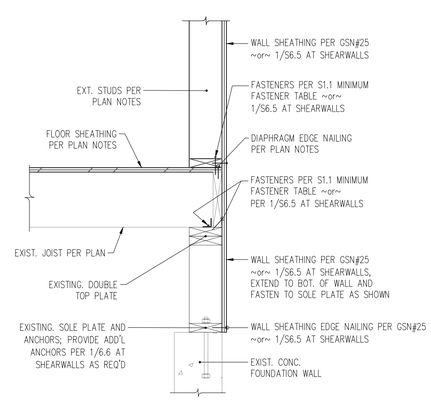

4 / S6.2 SECTION THROUGH EXTERIOR FOUNDATION WALL AT EXISTING PERPENDICULAR JOISTS
1" = 1'-0"

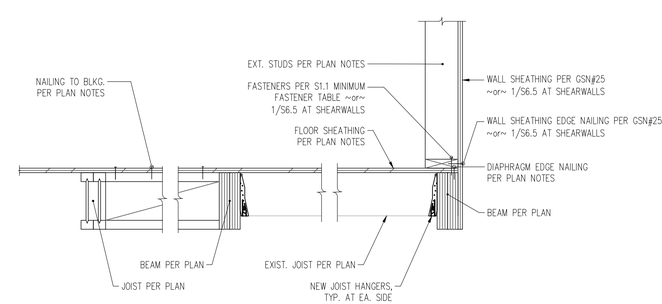

1 / S6.2 SECTION THROUGH EXTERIOR WALL AT EXISTING PERPENDICULAR JOISTS
1" = 1'-0"

9317 REGISTERED ARCHITECT CHRIS LUTHI STATE OF WASHINGTON

CENTERLINE DESIGN
4737 37th AVE SW
SEATTLE
206.932.8706
www.Centerline-Design.com

ATLAS CONSULTING STRUCTURAL ENGINEERS

Derakshani Residence
8151 SE 48th St
Mercer Island, WA - 98040

CONTENTS
Wood Floor Framing Details

DRAWN BY
JDA

DATE
04.01.21

S6.2

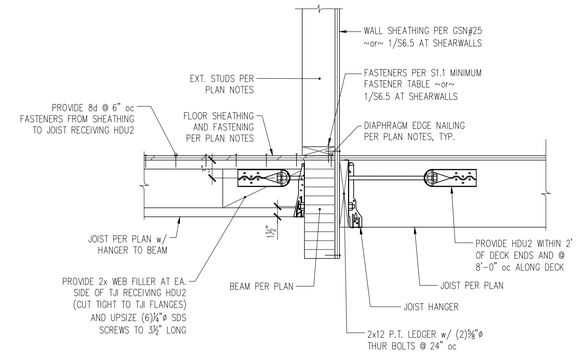

6 / S6.3 SECTION THROUGH EXTERIOR WALL AT PERPENDICULAR JOISTS AND PERPENDICULAR DECK JOISTS
1" = 1'-0"

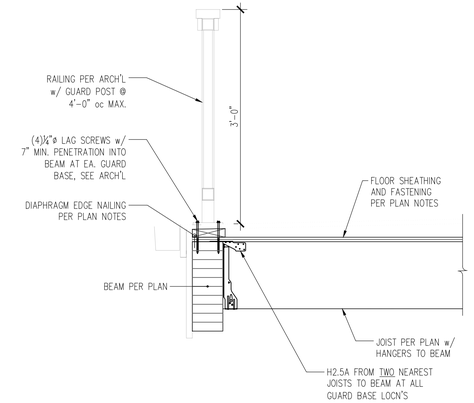

3 / S6.3 SECTION THROUGH DECK EDGE AT PERPENDICULAR JOISTS
1" = 1'-0"

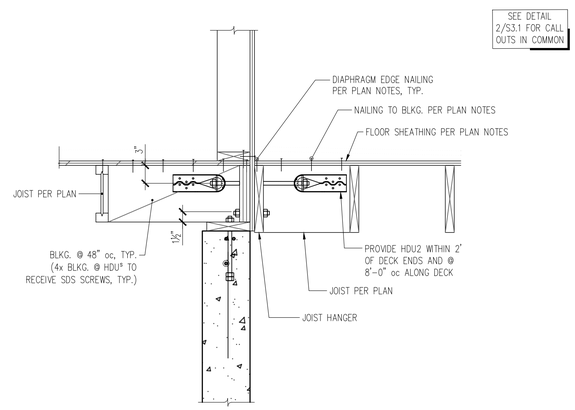

5 / S6.3 SECTION THROUGH EXTERIOR FOUNDATION WALL AT PARALLEL. JOISTS AND PARALLEL DECK JOISTS
1" = 1'-0"

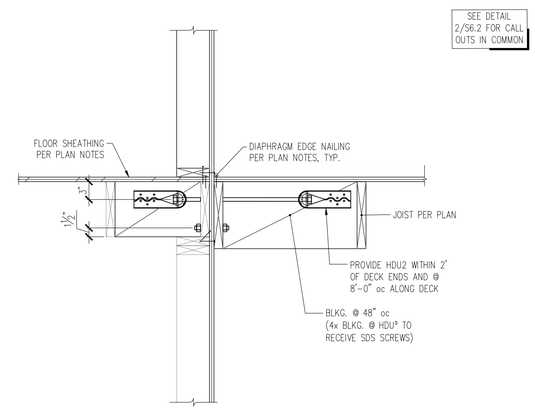

2 / S6.3 SECTION THROUGH EXTERIOR WALL AT PARALLEL JOISTS AND PARALLEL DECK JOISTS
1" = 1'-0"

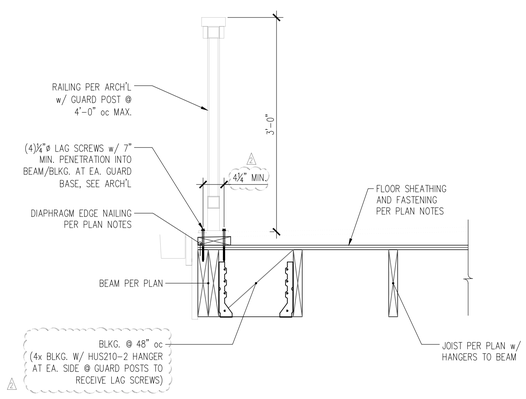

4 / S6.3 SECTION THROUGH DECK EDGE AT PARALLEL JOISTS
1" = 1'-0"

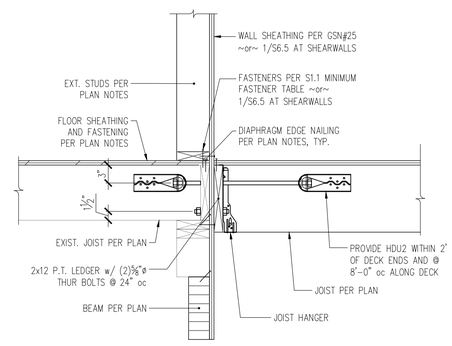

1 / S6.3 SECTION THROUGH EXTERIOR WALL AT PERP. EXIST. JOISTS AND PERP. DECK JOISTS
1" = 1'-0"

9317 REGISTERED ARCHITECT CHRIS LUTHI STATE OF WASHINGTON

CENTERLINE DESIGN
4737 37th AVE SW
SEATTLE
206.932.8706
www.CenterLine-Design.com

ATLAS CONSULTING STRUCTURAL ENGINEERS

Derakshani Residence
8151 SE 48th St
Mercer Island, WA - 98040

CONTENTS
Wood Floor Framing Details

DRAWN BY
JDA

DATE
04.01.21
09.29.21
12.03.21 △1

S6.3

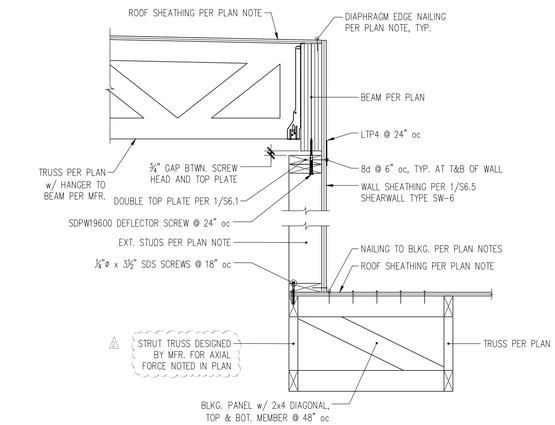

9 / S6.4 SECTION AT LOW-TO-HIGH ROOF TRANSITION
1" = 1'-0"

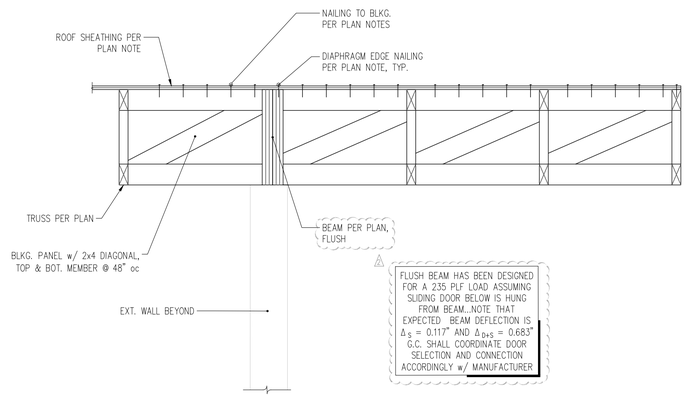

6 / S6.4 SECTION THROUGH EXTERIOR WALL AT EXTENDED ROOF OVERHANG AND GARAGE HEADER
1" = 1'-0"

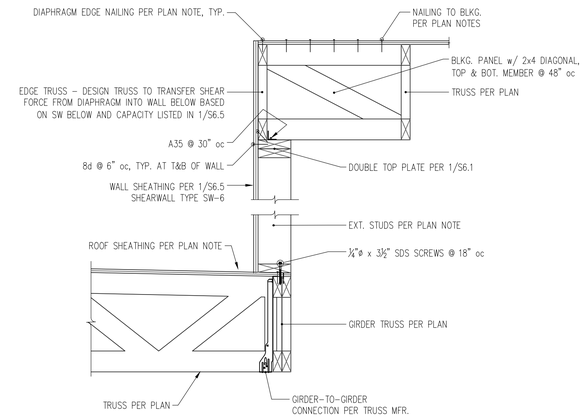

3 / S6.4 SECTION AT LOW-TO-HIGH ROOF TRANSITION
1" = 1'-0"

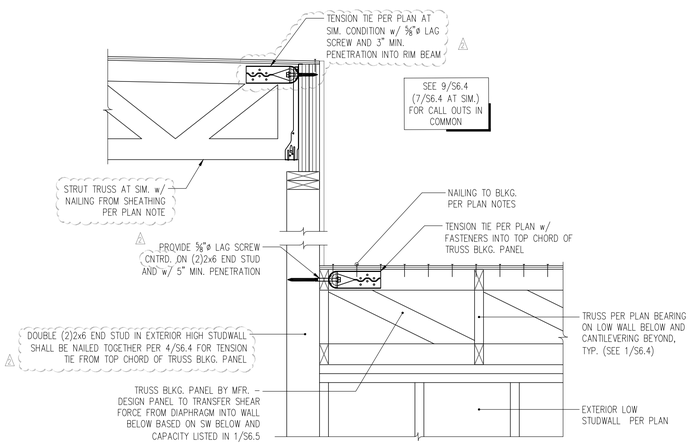

8 / S6.4 CHORD TENSION TIE AT LOW-TO-HIGH ROOF BREAK
1" = 1'-0"

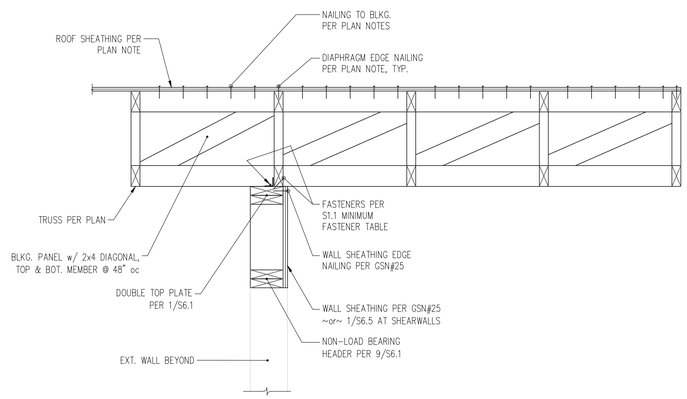

5 / S6.4 SECTION THROUGH EXTERIOR WALL AT EXTENDED ROOF OVERHANG
1" = 1'-0"

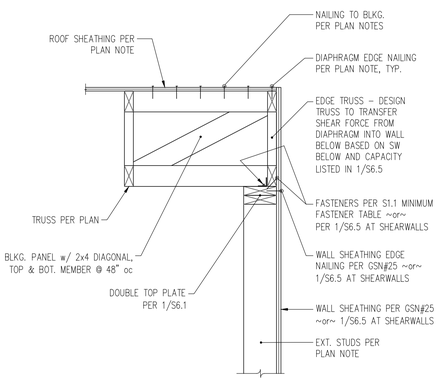

2 / S6.4 SECTION THROUGH EXTERIOR WALL AT PARALLEL TRUSSES
1" = 1'-0"

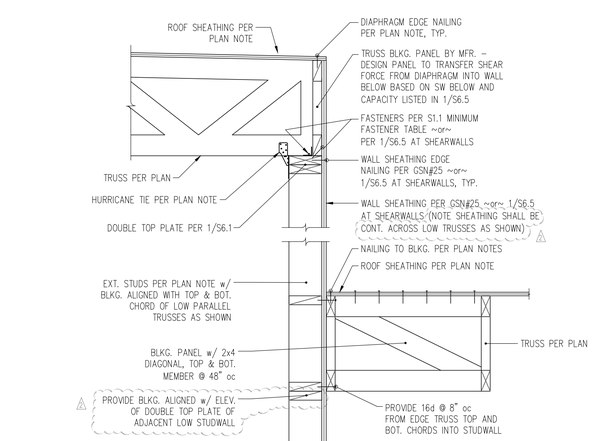

7 / S6.4 SECTION AT LOW-TO-HIGH ROOF TRANSITION
1" = 1'-0"

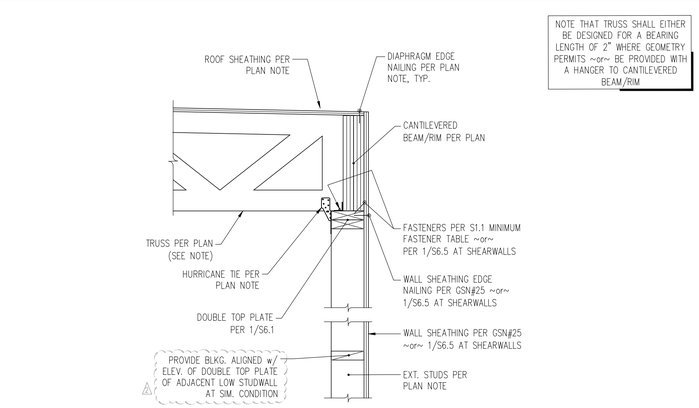

4 / S6.4 SECTION THROUGH EXTERIOR WALL AT PERPENDICULAR TRUSSES AND CANTILEVERED BEAM/RIM
1" = 1'-0"

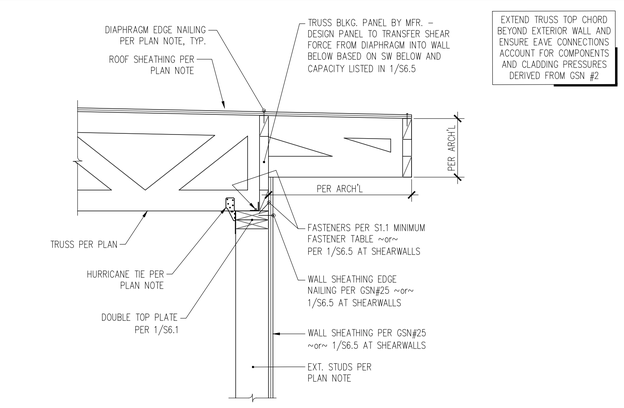

1 / S6.4 SECTION THROUGH EXTERIOR WALL AT PERPENDICULAR TRUSSES
1" = 1'-0"

9317 REGISTERED ARCHITECT
CHRIS LUTH
STATE OF WASHINGTON

CENTERLINE DESIGN
4737 37th AVE SW
SEATTLE
206.932.8706
www.Centerline-Design.com

ATLAS CONSULTING STRUCTURAL ENGINEERS

Derakshani Residence
8151 SE 48th St
Mercer Island, WA - 98040

CONTENTS
Wood Roof Framing Details

DRAWN BY
JDA
DATE
04.01.21
09.29.21
12.03.21

S6.4

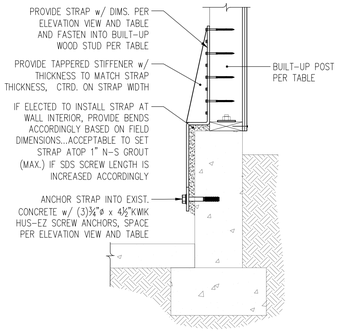

SECTION A – STRAP SET AT WALL INTERIOR

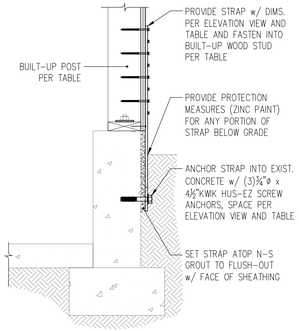

SECTION B – STRAP SET AT WALL EXTERIOR

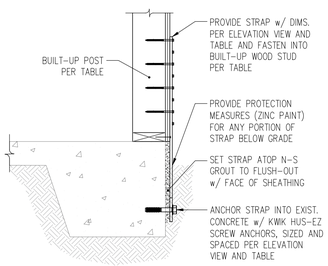

SECTION C – STRAP AT EXISTING THICKENED SLAB EDGE

COORDINATE CORNER CONDITION(S) WITH SEOR AFTER V.I.F. DIMENSIONS HAVE BEEN CONFIRMED

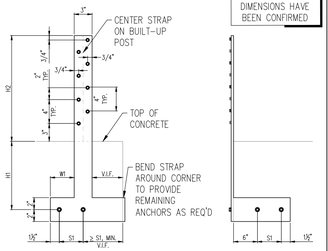

TENSION TIE ELEVATION VIEW – CORNER CONDITION

CUSTOM TENSION TIE SCHEDULE

TIE MARK	MIN. ① No. OF STUDS	STRAP DIMENSIONS ② t	H1	H2	W1	S1	No. OF ¾"ø x 3½" SDS SCREWS	No. OF KWIK HUS EZ ANCHORS	ASD CAPACITY
CU1.5	(2)2x	12 ga.	4"	11¾"	2½"	5"	(5)	(2)⅝"ø x 5½"	1,500#
CU2.5	(2)2x	12 ga.	5"	15¾"	4"	4"	(7)	(3)⅝"ø x 5½"	2,500#
CU3	(2)2x	10 ga.	6"	17¾"	4"	4"	(8)	(3)¾"ø x 4½"	3,000#
CU3.5	(2)2x	10 ga.	8"	19¾"	5"	5"	(9)	(3)¾"ø x 4½"	3,500#
CU5	(3)2x	10 ga.	8½"	29¾"	6¾"	4½"	(14)	(4)¾"ø x 4½"	5,000#
CU6	(4)2x	8 ga.	11¼"	33¾"	9"	6"	(16)	(5)¾"ø x 4½"	6,000#

① NAIL PLYWOOD SHEATHING TO STUDS RECEIVING HOLDOWN WITH SCHEDULED PANEL EDGE NAILING. STAGGER NAILS SO THAT EACH STUD IS NAILED.
② STRAPS SHALL BE ASTM A653 OR A1003, GRADE 33 WHERE STRAP THICKNESS IS LESS THAN 12 ga., AND GRADE 50 WHERE STRAP IS 10 ga. AND 8 ga.

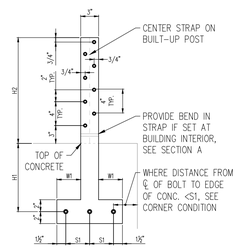

TENSION TIE ELEVATION VIEW – TYPICAL CONDITION

8 / S6.5 HOLD DOWN DETAIL
1" = 1'-0"

SHEARWALL PANEL NAILING	SHEARWALL PANEL TYPE	STRAP END LENGTH
SW-6	TYPE 1	16"
	TYPE 2	FULL LENGTH
SW-4	TYPE 1	FULL LENGTH
	TYPE 2	48"

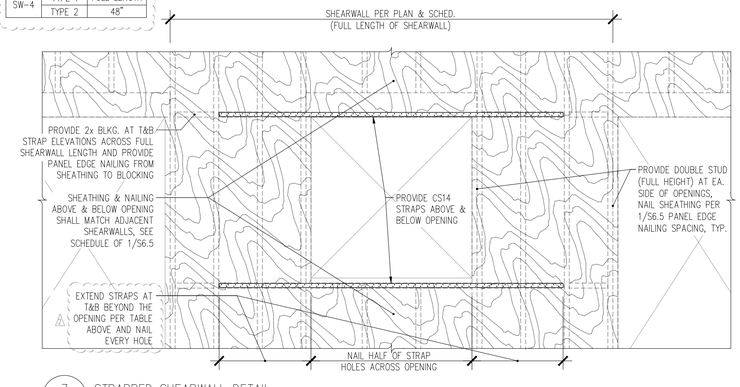

7 / S6.5 STRAPPED SHEARWALL DETAIL
N.T.S.

STRAP TENSION TIE SCHEDULE

TIE ① MARK	MIN. NUMBER② OF STUDS	CLEAR SPAN – TOTAL FASTENERS③	ASD CAPACITY	BUILT-UP STUD FACE NAILS or SCREWS ④
HDU2^	(2)2x	(6)¼"ø x 2½" SDS SCREWS	1,500#	10d @ 6" oc
MSTC28	(2)2x	16" – (16)0.148"ø x 3¼"	1,330#	10d @ 6" oc
MSTC40	(3)2x	16" – (32)0.148"ø x 3¼"	2,655#	(5)¼"ø x 4½" SDS
MSTC52	(3)2x	16" – (48)0.148"ø x 3¼"	3,985#	(8)¼"ø x 4½" SDS
MSTC66	(4)2x	16" – (68)0.148"ø x 3¼"	5,850#	(11)¼"ø x 6" SDS

① TENSION TIE TYPES REFER TO SIMPSON STRONG-TIE CATALOG CALLOUTS.
② NAIL PLYWOOD SHEATHING TO STUDS RECEIVING HOLDOWN WITH SCHEDULED PANEL EDGE NAILING. STAGGER NAILS SO THAT EACH STUD IS NAILED.
③ FASTENERS NOTED IN TABLE ABOVE REPRESENT THE TOTAL AMOUNT. FOR STRAPS, HALF OF THE FASTENERS SHALL BE PROVIDED INTO EACH STUD.
④ SCREWS SHALL BE SPACED EQUALLY ALONG FULL HEIGHT OF STUD ABOVE TENSION TIE. PROVIDE SCREWS AS NOTED IN TABLE AT ONE FACE OF BUILT-UP STUD, AND 10d @ 6" oc NAILS AT OPPOSITE FACE OF BUILT UP STUD.
^ DENOTES TENSION TIE THAT OCCURS ATOP OF A FRAMING MEMBER BELOW. FOR HDU2^, PROVIDE A ⅝"ø LAG SCREW WITH 3" MINIMUM PENETRATION INTO THE BEAM

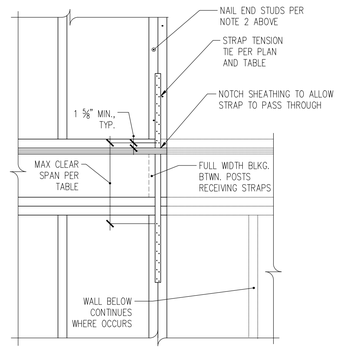

ELEVATION VIEW – TYPICAL CONDITION

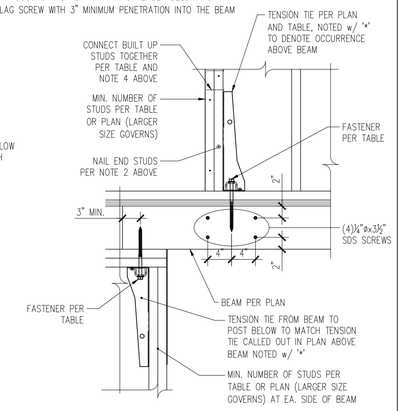

ELEVATION VIEW – TENSION TIE ABOVE BEAM

HOLDOWN TENSION TIE SCHEDULE

TIE ① MARK	MIN. NUMBER② OF STUDS	ANCHOR (ø x EMBEDMENT) and No. OF HAIRPIN DOWELS③	FASTENERS FROM TIE TO STUD	ASD CAPACITY	BUILT-UP STUD FACE NAILS or SCREWS ④
HDU2	(2)2x	⅝"ø x 20" – (2)#4 HAIRPIN	(6)¼"ø x 2½" SDS SCREWS	3,075#	10d @ 6" oc
HDU4	(3)2x	⅝"ø x 20" – (2)#4 HAIRPIN	(10)¼"ø x 2½" SDS SCREWS	4,565#	(9)¼"ø x 4½" SDS
HDU8	(4)2x	⅞"ø x 20" – (4)#4 HAIRPIN	(20)¼"ø x 2½" SDS SCREWS	7,870#	(15)¼"ø x 6" SDS
HDU11	(5)2x	1"ø x 20" – (4)#4 HAIRPIN	(30)¼"ø x 2½" SDS SCREWS	11,175#	(21)¼"ø x 8" SDS

① TENSION TIE TYPES REFER TO SIMPSON STRONG-TIE CATALOG CALLOUTS.
② NAIL PLYWOOD SHEATHING TO STUDS RECEIVING HOLDOWN WITH SCHEDULED PANEL EDGE NAILING. STAGGER NAILS SO THAT EACH STUD IS NAILED.
③ ANCHORS SHALL BE HEAVY HEX HEAD WITH DOUBLE NUT CAST INTO CONCRETE.
ASTM F 1554 Gr. 36 FOR ⅝"ø ANCHOR
ASTM F 1554 Gr. 105 FOR ⅞"ø ANCHOR
ASTM F 1554 Gr. 55 FOR 1"ø ANCHOR
④ SCREWS SHALL BE SPACED EQUALLY ALONG FULL HEIGHT OF STUD ABOVE TENSION TIE. PROVIDE SCREWS AS NOTED IN TABLE AT ONE FACE OF BUILT-UP STUD, AND 10d @ 6" oc NAILS AT OPPOSITE FACE OF BUILT UP STUD.

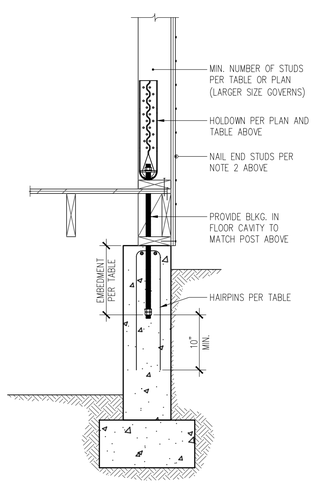

SECTION VIEW

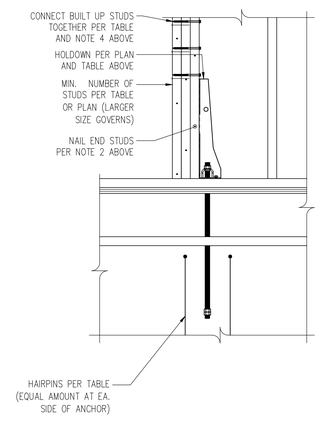

ELEVATION VIEW

4 / S6.5 HOLDOWN DETAIL AND SCHEDULE
1" = 1'-0"

SHEARWALL PANEL TYPE	SHEATHING THICKNESS ①	0.131" x 2¼" PANEL NAILING ②	STUD/BLKG. AT ABUTTING PANEL EDGES & SILL PLATE THICKNESS ③	CONN. OF BLKG. OR FRAMING to TOP PLATE; AND SOLE PLATE to SILL PLATE ⑦ ④ ¼"ø x 3½" SDS SCREWS	⑤ A35 CLIPS	⑥ LTP4 PLATES	⑧ ⑨ ANCHOR BOLTS TO CONC. ⅝"ø	¾"ø	ASD CAPACITY, PLF
SW-6	½"	6" oc	2x	18" oc	30" oc	28" oc	48" oc	48" oc	260
SW-4	½"	4" oc	3x	12" oc	20" oc	19" oc	46" oc	48" oc	380
SW-3	½"	3" oc	3x	9" oc	15" oc	14" oc	36" oc	48" oc	490
SW-2	½"	2" oc	3x	7" oc	12" oc	11" oc	27" oc	38" oc	640
SW-33	½"	3" oc EA. SIDE	3x	4" oc	7" oc	7" oc	18" oc	24" oc	980

① SHEATHING SHALL CONSIST OF ½" PLYWOOD AND HAVE A MINIMUM SPAN RATING OF 24/0. PERMISSIBLE TO RE-USE EXISTING SHEATHING AT EXISTING STUDWALLS IF THICKNESS & SPAN RATING CAN BE VERIFIED AND STUDS & SHEATHING ARE IN SUITABLE CONDITION.

② PANEL NAILING APPLIES TO ALL SHEATHING PANEL EDGES. IF RE-USING EXISTING SHEATHING PER NOTE 1 ABOVE, PROVIDE ADDITIONAL FASTENERS AS REQUIRED TO MEET SPACING REQUIREMENTS. INSTALL BLOCKING AT ALL UNFRAMED PANEL EDGES. ENSURE SHEATHING IS NAILED TO EXISTING INTERMEDIATE FRAMING WITH PANEL NAILS AT 12"oc.

③ DOUBLE 2x MEMBERS MAY BE SUBSTITUTED FOR 3x MEMBERS AT WALLS WITH ONLY ONE LAYER OF SHEATHING. 2x MEMBERS SHALL BE NAILED TOGETHER WITH 8d FACE: @ 5" oc FOR SW-6, @ 3½" oc FOR SW-4, @ 2½" oc FOR SW-3, AND @ 2" oc FOR SW-2 (116#/NAIL)

④ ROWS OF NAILS AND SDS SCREWS SHALL BE OFFSET AT LEAST ½" AND STAGGERED. MINIMUM EDGE DISTANCE FOR NAILS AND SDS SCREWS INTO EDGE OF MEMBERS SHALL BE ⅜" (400#/SCREW)

⑤ A35 CLIPS SHALL BE INSTALLED w/ (12)0.131 x 1½ " NAILS (650#/CLIP)

⑥ LTP4 LATERAL TIE PLATES MAY BE INSTALLED OVER SHEATHING w/ (12)0.131 x 2½" NAILS (625#/CLIP)

⑦ CONTRACTOR SHALL USE A35 or LT4P CLIPS TO CONNECT ROOF TO DOUBLE TOP PLATE AND SDS SCRWS or LTP4 CLIPS TO CONNECT SOLE PLATE TO RIM BOARD AT MAIN FLOOR. EXTEND SHEATHING TO BOTTOM OF SOLE PLATE AT MAIN FLOOR FOUNDATION WALL AND PROVIDE EDGE FASTENING AS NOTED IN TABLE.

⑧ PLATE WASHERS IN 2x4 STUD WALLS AND ALL SINGLE SIDED SHEAR WALLS SHALL BE 3"x3"x0.229". DOUBLE SIDED 2x6 SHEAR WALLS SHALL HAVE 4½"x3"0.229" PLATE WASHERS. THE EDGE OF PLATE WASHERS SHALL BE LOCATED WITHIN ½" OF THE EDGE OF BOTTOM PLATE ON THE SIDE WITH SHEATHING.

⑨ CAST ANCHORS A MINIMUM OF 7" INTO CONCRETE. INSTALL ADDITIONAL ANCHOR BOLTS AT EACH SIDE OF PLATE BREAKS AND PENETRATIONS EXCEEDING THE "NO REINFORCING" HOLE SIZE PER 2/S6.1.
AT EXISTING STUD WALLS, A COMBINATION OF EXISTING AND NEW ANCHOR BOLTS CAN BE COUNTED TOWARDS THE SPACING REQUIREMENTS NOTE IN THE TABLE PROVIDED THEY ADHERE TO NOTE #8 ABOVE. NEW ANCHOR BOLTS SHALL BE ¾"ø HILTI KWIK HUS-EZ SCREW ANCHORS WITH 3" MINIMUM EMBEDMENT INTO CONCRETE. AS AN ALTERNATIVE TO NEW ANCHOR BOLTS, SIMPSON FRFP RETROFIT FOUNDATION PLATES WITH (5)¼"ø SDS SCREWS THAT PENETRATE THE SILL PLATE 2½" MAY BE USED (#1810/PLATE) IF SPACED ACCORDINGLY: @ 72" oc FOR SW-6, @ 56" oc FOR SW-4, @ 42" oc FOR SW-3,@ 32" oc FOR SW-2, AND @ 20" oc FOR SW-33

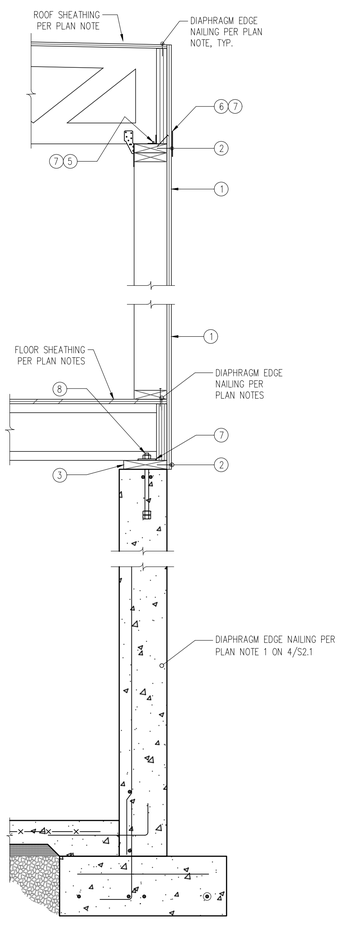

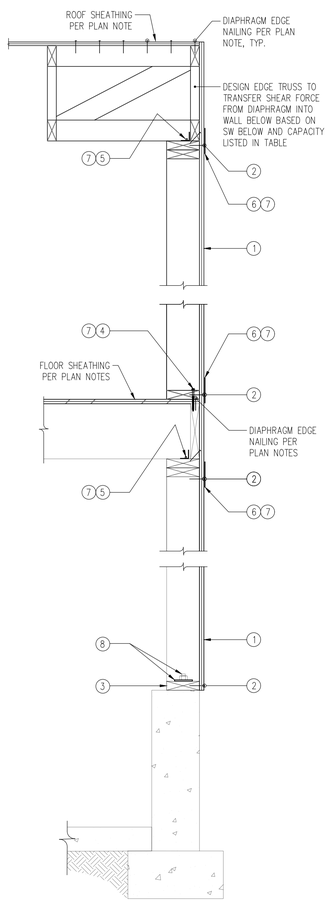

1 / S6.5 SHEARWALL SECTION AND SCHEDULE
1" = 1'-0"

REGISTERED ARCHITECT
CHRIS LUTHY
STATE OF WASHINGTON

CENTERLINE DESIGN
4737 37th AVE SW
SEATTLE
206.932.8706
www.CenterLine-Design.com

ATLAS CONSULTING STRUCTURAL ENGINEERS

Derakshani Residence
8151 SE 48th St
Mercer Island, WA - 98040

CONTENTS
Lateral Details

DRAWN BY
JDA

DATE
04.01.21
09.29.21
12.03.21

S6.5

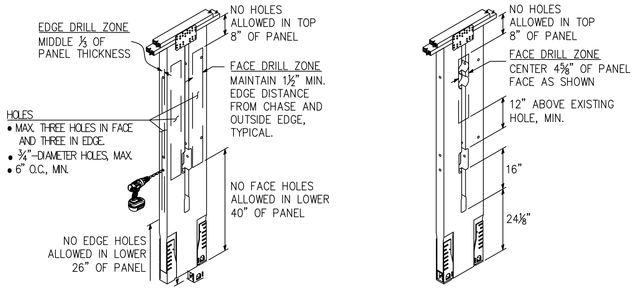

ALLOWABLE SMALL HOLES (FACE & EDGE DRILL ZONES)
- 4⅝"-DIA. HOLES, MAX.
- MAX. OF TWO 4⅝"-DIA. HOLES OR ONE 4¼"x12" HOLE.
- NO MINIMUM ON-CENTER SPACING REQUIRED.

1 / S6.6 TRIM ZONE AND ALLOWABLE HOLES
1" = 1'-0"

WSW-TOW ALTERNATE CONNECTION KIT		
MODEL NO.	FASTENER QUANTITY	
	SD #10x1½"	SDS ¼"x6"
WSW-TOW12KT	20	2
WSW-TOW18KT	28	4
WSW-TOW24KT	40	8

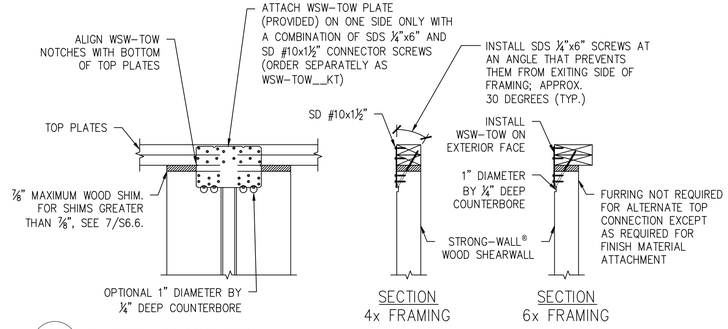

6 / S6.5 ALTERNATE TOP CONNECTION
1" = 1'-0"

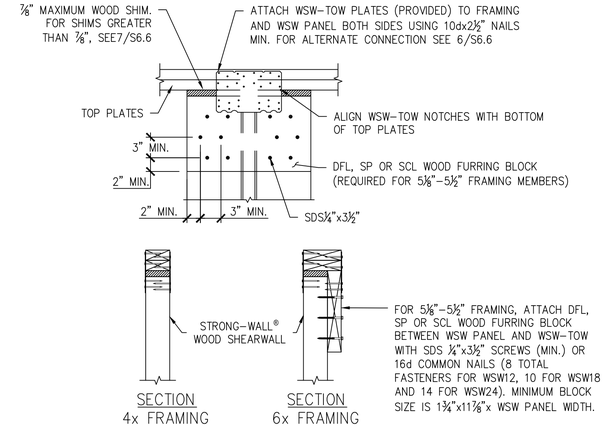

3 / S6.5 STANDARD TOP CONNECTION
1" = 1'-0"

QTY. OF SDS¼"x6" SCREWS REQ'D.	
WSW12	4
WSW18	8
WSW24	12

EDGE DISTANCE FOR SCREWS		
SLOPE	A (in.)	B (in.)
0:12-4:12	2	3
5:12-8:12	1½	4½
9:12-12:12	1½	5½

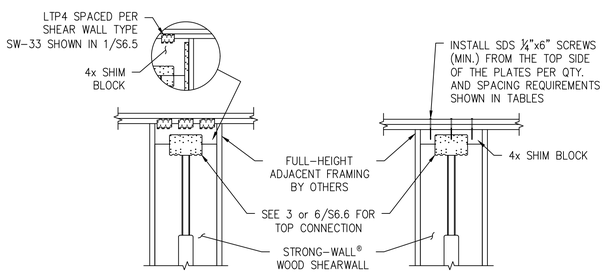

FOR 8" TO 12" BLOCK DEPTHS:
ATTACH SIMPSON STRONG-TIE® CS16 STRAPS AT EDGE OF WSW PANEL (EACH SIDE) USING 10dx1½" NAILS

SHIM BLOCK HEIGHTS GREATER THAN 8" AND UP TO 10":
- 8 NAILS INTO BLOCK
- 8 NAILS INTO WSW PANEL

SHIM BLOCK HEIGHTS GREATER THAN 10" AND UP TO 12":
- 10 NAILS INTO BLOCK
- 10 NAILS INTO WSW PANEL

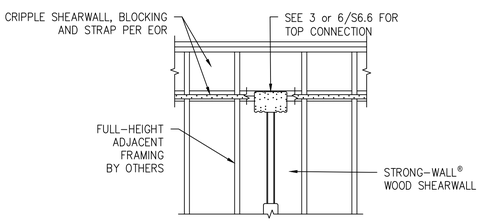

7 / S6.6 TOP OF WALL HEIGHT ADJUSTMENTS
1" = 1'-0"

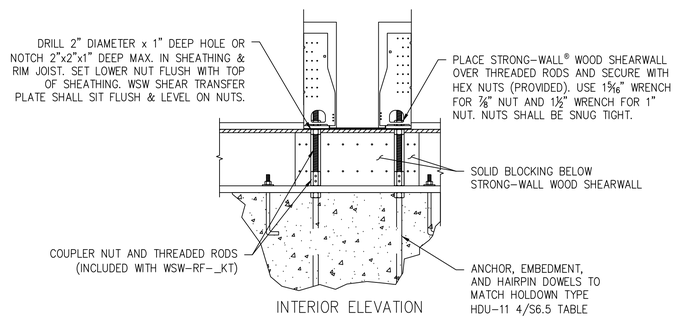

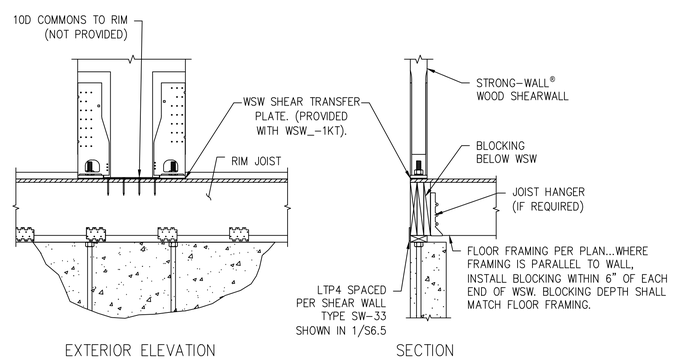

WALL WIDTH (in.)	MODEL NO.	CONTENTS
12	WSW-RF-12KT	EACH KIT CONTAINS (1) SHEAR TRANSFER PLATE (2) ⅞" x 18" OR 1" x 18" THREADED RODS (ASTM A36) (2) COUPLER NUTS (2) HEAVY HEX NUTS INSTALLATION INSTRUCTIONS
18	WSW-RF-18KT	
24	WSW-RF-24KT	

ORDER FIRST FLOOR CONNECTION KIT SEPARATELY. MODEL WSW-RF-_KT. EXAMPLE WSW-RF-18KT

4 / S6.6 STANDARD INSTALLATION AT BASE OF STRONG-WALL
1" = 1'-0"

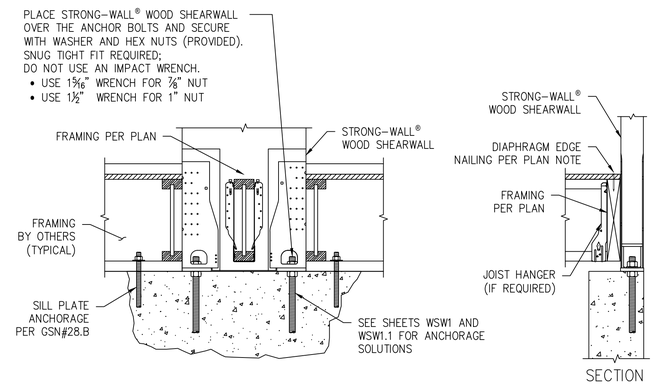

STRONG-WALL® WOOD SHEARWALL HEIGHT TO INCLUDE THE DEPTH OF THE FLOOR SYSTEM AND SHALL BE INSTALLED DIRECTLY ON THE FOUNDATION. SPECIFY PANEL HEIGHT FROM TOP OF FOUNDATION TO UNDERSIDE OF TOP PLATES OR BEAM.

2 / S6.6 ALTERNATE INSTALLATION AT BASE OF STRONG-WALL
1" = 1'-0"

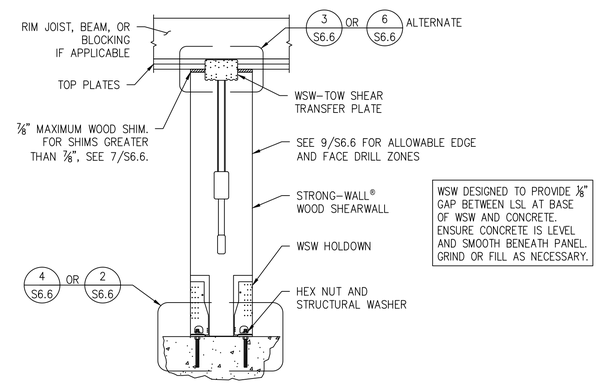

WSW DESIGNED TO PROVIDE ⅛" GAP BETWEEN LSL AT BASE OF WSW AND CONCRETE. ENSURE CONCRETE IS LEVEL AND SMOOTH BENEATH PANEL. GRIND OR FILL AS NECESSARY.

1 / S6.6 SINGLE STORY WSW ON CONCRETE
1" = 1'-0"

9317 REGISTERED ARCHITECT CHRIS LUTHI STATE OF WASHINGTON

CENTERLINE DESIGN
4737 37th AVE SW
SEATTLE
206.932.8706
www.Centerline-Design.com

ATLAS CONSULTING STRUCTURAL ENGINEERS
JAMES D. ADAMS 33359 STATE OF WASHINGTON REGISTERED STRUCTURAL ENGINEER

Derakshani Residence
8151 SE 48th St
Mercer Island, WA - 98040

CONTENTS
Simpson Strong-Wall Details

DRAWN BY
JDA

DATE
04.01.21

S6.6

LEGAL DESCRIPTION

THAT PORTION OF GOVERNMENT LOT 7, SECTION 24, TOWNSHIP 24 NORTH, RANGE 4 EAST, WILLAMETTE MERIDIAN, IN KING COUNTY, WASHINGTON, DESCRIBED AS FOLLOWS:
BEGINNING AT THE NORTHEAST CORNER OF GOVERMENT LOT 7 IN SAID SECTION 24, THENCE SOUTH 0°00'35" WEST ALONG THE EAST LINE THEREOF, 96 FEET;
THENCE NORTH 89°33'45" WEST PARALLEL WITH THE NORTH LINE OF SAID SECTION, 208 FEET TO THE TRUE POINT OF BEGINNING;
THENCE CONTINUING NORTH 89°33'45" WEST 130 FEET;
THENCE SOUTH 0°00'35" WEST 4 FEET;
THENCE NORTH 89°33'45" WEST 20 FEET;
THENCE SOUTH 0°00'35" WEST 110.05 FEET TO A POINT BEARING NORTH 89°51'58" WEST FROM A POINT ON THE EAST LINE FO SAID SECTION 208.4 FEET SOUTH OF THE NORTHEAST CORNER THEREOF;
THENCE SOUTH 89°51'08" EAST TO A POINT BEARING SOUTH 0°00'35" WEST FROM THE TRUE POINT OF BEGINNING;
THENCE NORTH 0°00'35" EAST 113.00 FEET, MORE OR LESS, TO THE TRUE POINT OF BEGINNING;
TOGETHER WITH AN EASEMENT FOR ROAD PURPOSES OVER THE WEST 40 FEET OF THE EAST 378 FEET OF THE NORTH 100 FEET OF SAID SECTION 24.

ORGANIC SOIL REQUIREMENT

MINIMUM 10% ORGANIC MULCH & COMPOST SOIL REQUIRED

SOIL AMENDMENT REQUIRED

COMPOST AMENDED SOIL REQUIRED ON ALL LANDSCAPED AREAS AFTER CONSTRUCTION. SEE DETAIL ON C3.5.

SOIL INSPECTION REQUIRED BY ENGINEER

A POST CONSTRUCTION INSPECTION & CERTIFICATION OF AMENDED SOILS IS REQUIRED BY A LICENSED CIVIL ENGINEER. THIS IS REQUIRED BEFORE FINAL SIGN-OFF BY CITY.

EROSION CONTROL LEGEND

LIMITS OF DISTURBANCE		
FILTER FABRIC FENCE (SILT FENCE)	SF	
STABILIZED CONSTRUCTION ENTRANCE	CE	
CATCH BASIN INLET PROTECTION	IP	
INTERCEPTOR SWALE SEE COR DWG 504, TYPE A TEMPORARY SWALE	IS	
TREE PROTECTION FENCING	TP	
CHECK DAM	CD	
STRAW WATTLES	SW	USE AS NEEDED

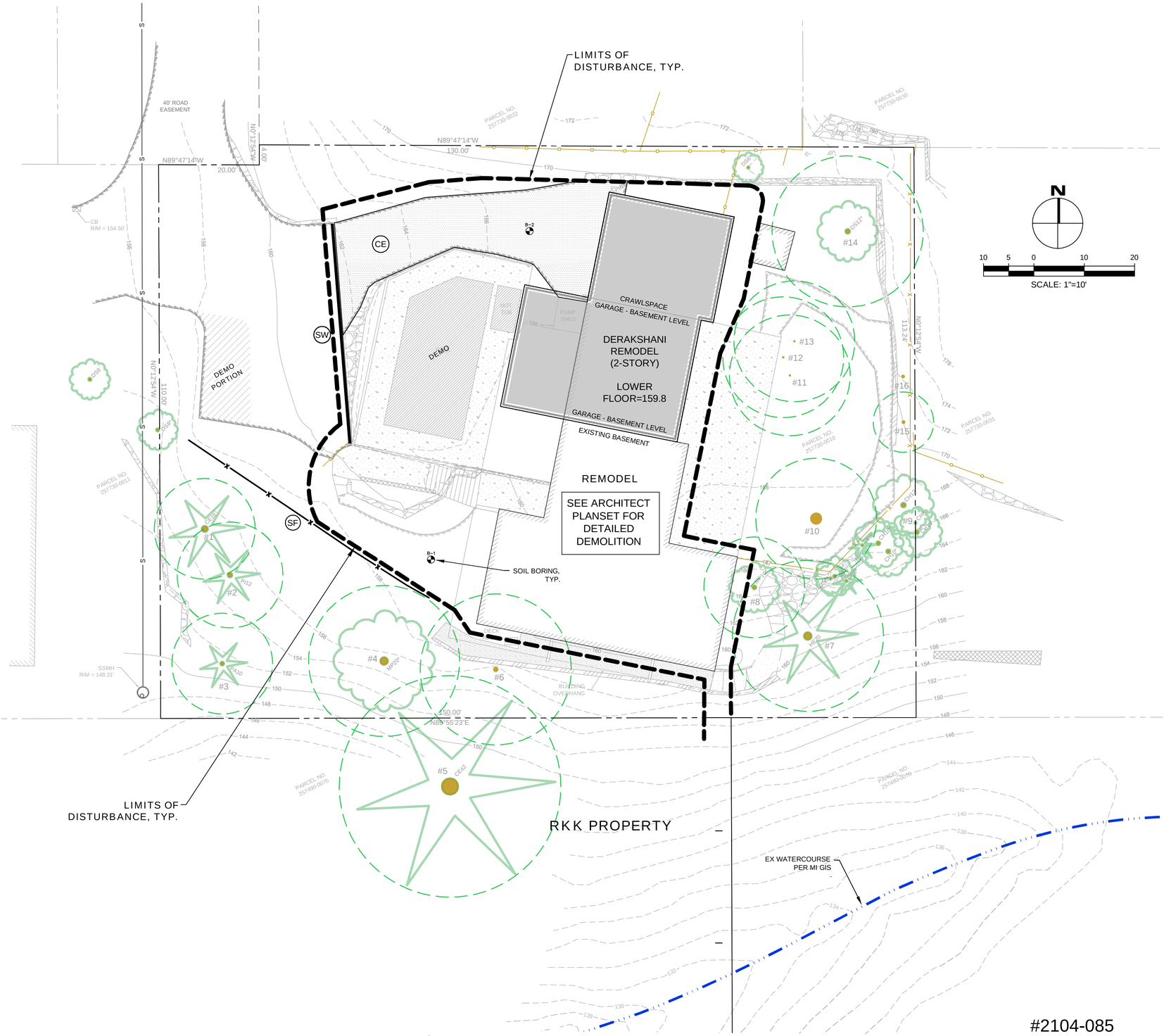

#2104-085

NO.	DATE	BY	REVISIONS

APPLICANT
KAM DERAKSHANI
8151 SE 48th STREET
MERCER ISLAND, WA 98040

DATE: Jun 08, 2022
JOB# 2026
DRAFTED: SS DESIGN: SS
DIGITAL SIGNATURE

Jun 08, 2022
JEFFREY E. DUFFY STATE OF WASHINGTON 50706 REGISTERED PROFESSIONAL ENGINEER

CIVIL ENGINEERING SOLUTIONS
102 NW CANAL STREET SEATTLE, WA 98107
PHONE: 206.930.0342 DUFFY@CESOLUTIONS.US

TESC PLAN
TREE RETENTION PLAN
DERAKSHANI REMODEL
8151 SE 48th STREET, MERCER ISLAND, WA 98040

DRAWING NO: C1.0
APN 257730-0010
2104-085

SILT FENCE DETAIL DOE

Figure II-3.22: Silt Fence

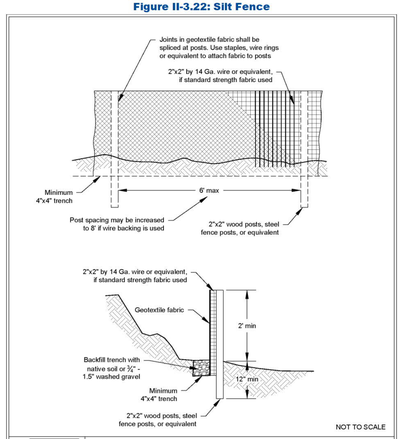

2019 Stormwater Management Manual for Western Washington

Volume II - Chapter 3 - Page 371

CONSTRUCTION ENTRANCE DOE

Figure II-3.1: Stabilized Construction Access

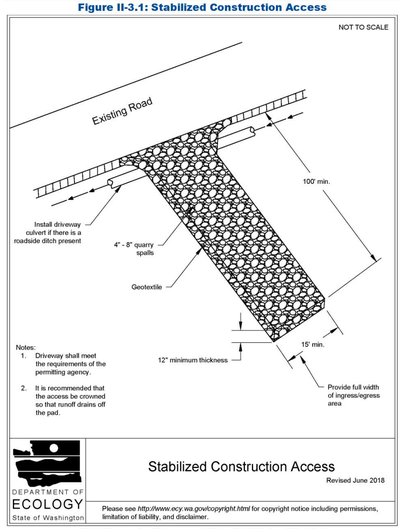

2019 Stormwater Management Manual for Western Washington

Volume II - Chapter 3 - Page 279

RECOMMENDED CONSTRUCTION SEQUENCE

A DETAILED CONSTRUCTION SEQUENCE IS NEEDED TO ENSURE THAT EROSION AND SEDIMENT CONTROL MEASURES ARE APPLIED AT THE APPROPRIATE TIMES. A RECOMMENDED CONSTRUCTION SEQUENCE IS PROVIDED BELOW:

1. HOLD AN ONSITE PRE-CONSTRUCTION MEETING.

2. POST SIGN WITH NAME AND PHONE NUMBER OF ESC SUPERVISOR (MAY BE CONSOLIDATED WITH THE REQUIRED NOTICE OF CONSTRUCTION SIGN).

3. FLAG OR FENCE CLEARING LIMITS.

4. INSTALL CATCH BASIN PROTECTION, IF REQUIRED.

5. GRADE AND INSTALL CONSTRUCTION ENTRANCE(S).

6. INSTALL PERIMETER PROTECTION (SILT FENCE, BRUSH BARRIER, ETC.).

7. CONSTRUCT SEDIMENT PONDS AND TRAPS.

8. GRADE AND STABILIZE CONSTRUCTION ROADS.

9. CONSTRUCT SURFACE WATER CONTROLS (INTERCEPTOR DIKES, PIPE SLOPE DRAINS, ETC.) SIMULTANEOUSLY WITH CLEARING AND GRADING FOR PROJECT DEVELOPMENT.

10. MAINTAIN EROSION CONTROL MEASURES IN ACCORDANCE WITH CITY OF MERCER ISLAND STANDARDS AND MANUFACTURER'S RECOMMENDATIONS.

11. RELOCATE SURFACE SURFACE WATER CONTROLS OR TESC MEASURES, OR INSTALL NEW MEASURES SO THAT AS SITE CONDITIONS CHANGE, THE TESC IS ALWAYS IN ACCORDANCE WITH CITY OF MERCER ISLAND TESC REQUIREMENTS.

12. COVER ALL AREAS THAT WILL BE UN-WORKED FOR MORE THAN SEVEN DAYS DURING THE DRY SEASON (MAY 1 TO SEPT 30) OR TWO DAYS DURING THE WET SEASON (OCT 1 TO APRIL 30) WITH STRAW, WOOD FIBER MULCH, COMPOST, PLASTIC SHEETING, OR EQUIVALENT.

13. STABILIZE ALL AREAS WITHIN SEVEN DAYS OF REACHING FINAL GRADE.

14. SEED, SOD, STABILIZE, OR COVER ANY AREAS TO REMAIN UNWORKED FOR MORE THAN 30 DAYS.

15. UPON COMPLETION OF THE PROJECT, STABILIZE ALL DISTURBED AREAS AND REMOVE BMPS IF APPROPRIATE.

DENUDED AREAS REQUIREMENTS

APRIL 1 TO SEPT 30
ALL DENUDED AREAS MUST BE STABILIZED WITHIN 7 DAYS OF CONSTRUCTION. PLEASE READ ALL CITY TESC NOTES ON SHEET C1.2.

OCT 1 TO MARCH 31
ALL DENUDED AREAS MUST BE STABILIZED WITHIN 2 DAYS OF GRADING. IF AN EROSION PROBLEM ALREADY EXISTS ON THE SITE, OTHER COVER PROTECTION AND EROSION CONTROL WILL BE REQUIRED.

EROSION CONTROL NOTES

D.8.2 STANDARD ESC PLAN NOTES
THE STANDARD ESC PLAN NOTES MUST BE INCLUDED ON ALL ESC PLANS. AT THE APPLICANT'S DISCRETION, NOTES THAT IN NO WAY APPLY TO THE PROJECT MAY BE OMITTED; HOWEVER, THE REMAINING NOTES MUST NOT BE RENUMBERED. FOR EXAMPLE, IF ESC NOTE #3 WERE OMITTED, THE REMAINING NOTES SHOULD BE NUMBERED 1, 2, 4, 5, 6, ETC.

1. APPROVAL OF THIS EROSION AND SEDIMENTATION CONTROL (ESC) PLAN DOES NOT CONSTITUTE AN APPROVAL OF PERMANENT ROAD OR DRAINAGE DESIGN (E.G., SIZE AND LOCATION OF ROADS, PIPES, RESTRICTORS, CHANNELS, RETENTION FACILITIES, UTILITIES, ETC.).

2. THE IMPLEMENTATION OF THESE ESC PLANS AND THE CONSTRUCTION, MAINTENANCE, REPLACEMENT, AND
UPGRADING OF THESE ESC FACILITIES IS THE RESPONSIBILITY OF THE APPLICANT/ESC SUPERVISOR UNTIL ALL CONSTRUCTION IS APPROVED.

3. THE BOUNDARIES OF THE CLEARING LIMITS SHOWN ON THIS PLAN SHALL BE CLEARLY FLAGGED BY SURVEY TAPE OR FENCING, IF REQUIRED, PRIOR TO CONSTRUCTION (SWDM APPENDIX D). DURING THE CONSTRUCTION PERIOD, NO DISTURBANCE BEYOND THE CLEARING LIMITS SHALL BE PERMITTED. THE CLEARING LIMITS SHALL BE MAINTAINED BY THE APPLICANT/ESC SUPERVISOR FOR THE DURATION OF CONSTRUCTION.

4. STABILIZED CONSTRUCTION ENTRANCES SHALL BE INSTALLED AT THE BEGINNING OF CONSTRUCTION AND MAINTAINED FOR THE DURATION OF THE PROJECT. ADDITIONAL MEASURES, SUCH AS CONSTRUCTED WHEEL WASH SYSTEMS OR WASH PADS, MAY BE REQUIRED TO ENSURE THAT ALL PAVED AREAS ARE KEPT CLEAN AND TRACK OUT TO ROAD RIGHT OF WAY DOES NOT OCCUR FOR THE DURATION OF THE PROJECT.

5. THE ESC FACILITIES SHOWN ON THIS PLAN MUST BE CONSTRUCTED PRIOR TO OR IN CONJUNCTION WITH ALL CLEARING AND GRADING SO AS TO ENSURE THAT THE TRANSPORT OF SEDIMENT TO SURFACE WATERS, DRAINAGE SYSTEMS, AND ADJACENT PROPERTIES IS MINIMIZED.

6. THE ESC FACILITIES SHOWN ON THIS PLAN ARE THE MINIMUM REQUIREMENTS FOR ANTICIPATED SITE CONDITIONS. DURING THE CONSTRUCTION PERIOD, THESE ESC FACILITIES SHALL BE UPGRADED AS NEEDED FOR UNEXPECTED STORM EVENTS AND MODIFIED TO ACCOUNT FOR CHANGING SITE CONDITIONS (E.G. ADDITIONAL COVER MEASURES, ADDITIONAL SUMP PUMPS, RELOCATION OF DITCHES AND SILT FENCES, PERIMETER PROTECTION ETC.) AS DIRECTED BY CITY OF MERCER ISLAND.

7. THE ESC FACILITIES SHALL BE INSPECTED DAILY BY THE APPLICANT/ESC SUPERVISOR AND MAINTAINED TO ENSURE CONTINUED PROPER FUNCTIONING. WRITTEN RECORDS SHALL BE KEPT OF WEEKLY REVIEWS OF THE ESC FACILITIES.

8. ANY AREAS OF EXPOSED SOILS, INCLUDING ROADWAY EMBANKMENTS, THAT WILL NOT BE DISTURBED FOR TWO CONSECUTIVE DAYS DURING THE WET SEASON OR SEVEN DAYS DURING THE DRY SEASON SHALL BE IMMEDIATELY STABILIZED WITH THE APPROVED ESC METHODS (E.G., SEEDING, MULCHING, PLASTIC COVERING, ETC.).

9. ANY AREA NEEDING ESC MEASURES THAT DO NOT REQUIRE IMMEDIATE ATTENTION SHALL BE ADDRESSED WITHIN SEVEN (7) DAYS.

10. THE ESC FACILITIES ON INACTIVE SITES SHALL BE INSPECTED AND MAINTAINED A MINIMUM OF ONCE A MONTH DURING THE DRY SEASON, BI-MONTHLY DURING THE WET SEASON, OR WITHIN TWENTY FOUR (24) HOURS FOLLOWING A STORM EVENT.

11. AT NO TIME SHALL MORE THAN ONE (1) FOOT OF SEDIMENT BE ALLOWED TO ACCUMULATE WITHIN A CATCH BASIN. ALL CATCH BASINS AND CONVEYANCE LINES SHALL BE CLEANED PRIOR TO PAVING. THE CLEANING OPERATION SHALL NOT FLUSH SEDIMENT-LADEN WATER INTO THE DOWNSTREAM SYSTEM.

12. ANY PERMANENT RETENTION/DETENTION FACILITY USED AS A TEMPORARY SETTLING BASIN SHALL BE MODIFIED WITH THE NECESSARY EROSION CONTROL MEASURES AND SHALL PROVIDE ADEQUATE STORAGE CAPACITY. IF THE FACILITY IS TO FUNCTION ULTIMATELY AS AN INFILTRATION SYSTEM, THE TEMPORARY FACILITY MUST BE ROUGH GRADED SO THAT THE BOTTOM AND SIDES ARE AT LEAST THREE FEET ABOVE THE FINAL GRADE OF THE PERMANENT FACILITY.

13. COVER MEASURES WILL BE APPLIED IN CONFORMANCE WITH APPENDIX D OF THE SURFACE WATER DESIGN MANUAL

14. PRIOR TO THE BEGINNING OF THE WET SEASON (OCT. 1), ALL DISTURBED AREAS SHALL BE REVIEWED TO IDENTIFY WHICH ONES CAN BE SEEDED IN PREPARATION FOR THE WINTER RAINS. DISTURBED AREAS SHALL BE SEEDED WITHIN ONE WEEK OF THE BEGINNING OF THE WET SEASON.

CITY NOTES

1. ANY CHANGES TO THE APPROVED PLANS REQUIRES CITY APPROVAL THROUGH A REVISION.

2. APPLICANT IS RESPONSIBLE FOR ANY DAMAGES TO UNDERGROUND UTILITIES CAUSED FROM THIS CONSTRUCTION.

3. CATCH BASIN FILTERS SHOULD BE PROVIDED FOR ALL STORM DRAIN CATCH BASINS/INLETS DOWNSLOPE AND WITHIN 500 FEET OF THE CONSTRUCTION AREA. CATCH BASIN FILTERS SHOULD BE DESIGNED BY THE MANUFACTURER FOR USE AT CONSTRUCTION SITES AND APPROVED BY THE CITY INSPECTOR. CATCH BASIN FILTERS SHOULD BE INSPECTED FREQUENTLY, ESPECIALLY AFTER STORM EVENTS. IF THE FILTER BECOMES CLOGGED, IT SHOULD BE CLEANED OR REPLACED.

4. CONTRACTORS SHALL VERIFY LOCATIONS AND DEPTHS OF UTILITES.

5. AT LEAST 48 HOURS PRIOR TO CONSTRUCTION, CALL "ONE CALL" AT 1.800.424.5555

6. DO NOT BACKFILL WITH NATIVE MATERIAL ON PUBLIC RIGHT-OF-WAY. ALL MATERIAL MUST BE IMPORTED

7. EROSION CONTROL: ALL "LAND DISTURBING ACTIVITY" IS SUBJECT TO PROVISIONS OF MERCER ISLAND ORDINANCE 95C-118 "STORM WATER MANAGEMENT." SPECIFIC ITEMS TO BE FOLLOWED AT YOUR SITE:

8. PROTECT ADJACENT PROPERTIES FROM ANY INCREASED RUNOFF OR SEDIMENTATION DUE TO THE CONSTRUCTION PROJECT THROUGH THE USE OF APPROPRIATE "BEST MANAGEMENT PRACTICES" (BMP) EXAMPLES INCLUDE, BUT ARE NOT LIMITED TO, SEDIMENT TRAPS, SEDIMENT PONDS, FILTER FABRIC FENCES, VEGETATIVE BUFFER STRIPS OR BIOENGINEERED SWALES.

9. CONSTRUCTION ACCESS TO THE SITE SHOULD BE LIMITED TO ONE ROUTE. STABILIZE ENTRANCE WITH QUARRY SPALLS TO PREVENT SEDIMENT FROM LEAVING THE SITE OR ENTERING THE STORM DRAINS.

10. PREVENT SEDIMENT, CONSTRUCTION DEBRIS, PAINTS, SOLVENTS, ETC., OR OTHER TYPES OF POLLUTION FROM ENTERING PUBLIC STORM DRAINS. KEEP ALL POLLUTION ON YOUR SITE.

11. ALL EXPOSED SOILS SHALL REMAIN DENUDED FOR NO LONGER THAN SEVEN (7) DAYS AND SHALL BE STABILIZED WITH MULCH, HAY, OR THE APPROPRIATE GROUND COVER. ALL EXPOSED SOILS SHALL BE COVERED IMMEDIATELY DURING ANY RAIN EVENT.

12. INSTALLATION OF CONCRETE DRIVEWAYS, TREES, SHRUBS, IRRIGATION, BOULDERS, BERMS, WALLS, GATES, AND OTHER IMPROVEMENTS ARE NOT ALLOWED IN THE PUBLIC RIGHT-OF-WAY WITHOUT PRIOR APPROVAL, AND AN ENCROACHMENT AGREEMENT AND RIGHT OF WAY PERMIT FROM THE SENIOR DEVELOPMENT ENGINEER.

13. OWNER SHALL CONTROL DISCHARGE OF SURFACE DRAINAGE RUNOFF FROM EXISTING AND NEW IMPERVIOUS AREAS IN A RESPONSIBLE MANNER. CONSTRUCTION OF NEW GUTTERS AND DOWNSPOUTS, DRY WELLS, LEVEL SPREADERS OR DOWNSTREAM CONVEYANCE PIPE MAY BE NECESSARY TO MINIMIZE DRAINAGE IMPACT TO YOUR NEIGHBORS. CONSTRUCTION OF MINIMUM DRAINAGE IMPROVEMENTS SHOWN OR CALLED OUT ON THIS PLAN DOES NOT IMPLY RELIEF FROM CIVIL LIABILITY FOR YOUR DOWNSTREAM DRAINAGE.

14. POT HOLING THE PUBLIC UTILITIES IS REQUIRED PRIOR TO ANY GRADING ACTIVITIES LESS THAN 6" OVER THE PUBLIC MAINS (WATER, SEWER AND STORM SYSTEMS). IF THERE IS A CONFLICT, THE APPLICANT IS REQUIRED TO SUBMIT A REVISION FOR APPROVAL PRIOR TO ANY GRADING ACTIVITIES OVER THE PUBLIC MAINS.

15. REMEMBER: EROSION CONTROL IS YOUR FIRST INSPECTION.

16. ROOF DRAINS MUST BE CONNECTED TO THE STORM DRAIN SYSTEM AND INSPECTED BY THE PUBLIC WORKS DEPARTMENT PRIOR TO ANY BACKFILLING OF PIPE.

17. SILENT FENCE: CLEAN AND PROVIDE REGULAR MAINTENANCE OF THE SILT FENCE. THE FENCE IS TO REMAIN VERTICAL AND IS TO FUNCTION PROPERLY THROUGHOUT THE TERM OF THE PROJECT.

18. WORK IN PUBLIC RIGHT OF WAY REQUIRES A RIGHT-OF-WAY USE PERMIT.

19. REFER TO WATER SERVICE PERMIT FOR ACTUAL LOCATION OF NEW WATER METER AND SERVICE LINE DETERMINED BY MERCER ISLAND WATER DEPARTMENT.

16. THE TV INSPECTION OF THE EXISTING SIDE SEWER TO THE CITY SEWER MAIN IS REQUIRED. IF THE RESULT OF THE TV INSPECTION IS NOT IN SATISFACTORY CONDITION, AS DETERMINED BY THE CITY OF MERCER ISLAND INSPECTOR, THE REPLACEMENT OF THE EXISTING SIDE SEWER IS REQUIRED. ALTERNATELY, A PRESSURE TEST OF THE SIDE SEWER, FROM SEWER MAIN TO POINT OF CONNECTION, MAY BE SUBSTITUTED FOR THE VIDEO INSPECTION.

20. NEWLY INSTALLED SIDE SEWER REQUIRES A 4 P.S.I. AIR TEST OR PROVIDE 10' OF HYDROSTATIC HEAD TEST.

21. POT HOLING THE PUBLIC UTILITIES IS REQUIRED PRIOR TO ANY GRADING ACTIVITIES LESS THAN 6" OVER THE PUBLIC MAINS (WATER, SEWER AND STORM SYSTEMS). IF THERE IS A CONFLICT, THE APPLICANT IS REQUIRED TO SUBMIT A REVISION FOR APPROVAL PRIOR TO ANY GRADING ACTIVITIES OVER THE PUBLIC MAINS.

22. THE LIMITS AND EXTENDS OF THE PAVEMENT IN THE PUBLIC RIGHT OF WAY SHALL BE DETERMINED BY THE CITY ENGINEER PRIOR TO FINALIZE THE PROJECT.

#2104-085

NO.	DATE	BY	REVISIONS

APPLICANT
KAM DERAKSHANI
8151 SE 48th STREET
MERCER ISLAND, WA 98040

DATE: Jun 07, 2022
JOB# 2026
DRAFTED: SS DESIGN: DE
DIGITAL SIGNATURE

Jun 07, 2022
JEFFREY E. DUFFY STATE OF WASHINGTON 38704 REGISTERED PROFESSIONAL ENGINEER

CIVIL ENGINEERING SOLUTIONS
102 NW CANAL STREET SEATTLE, WA 98107
PHONE: 206.930.0342 DUFFY@CESOLUTIONS.US

TESC & CITY NOTES
TESC DETAILS

DERAKSHANI REMODEL
8151 SE 48th STREET, MERCER ISLAND, WA 98040

DRAWING NO:
C1.2

APN 257730-0010
2104-085

SANITARY SEWER IMPROVEMENTS

1 -
2 -
3 -
4 -
7 -

WATER IMPROVEMENTS

10 -
11 -
12 -
14 -

STORM DRAIN

20 -4" STORM DRAIN (3034 PVC) @ MIN 2 % GRADE
21 -4" FOUNDATION DRAIN (3034 PVC) @ MIN 1 % GRADE
22 ~~-6" STORM DRAIN (3034 PVC) @ MIN 2 % GRADE~~
23 -
24 -
25 -
26 -
28 -
29 -

STORM DRAIN STRUCTURES

30 -
31 -
32 -TYPE 1 CB WITH SOLID LID
33 -TYPE 40 CB (OR EQUAL), SPILL CONTROL STYLE. PROVIDE RISOR WITH TURNED-DOWN ELBOW
34 -
35 -18" YARD DRAIN (OR EQUAL)
36 -6" WIDE NDS DURASLOPE CHANNEL DRAIN OR EQUAL. CLASS B VEHICLE RATED GRATE.
39 -
40 -
41 -
43 -

Impervious Area Spreadsheet - Stormwater Version			
Derekshani Remodel - 8151 SE 48th Street, Mercer Island, WA 98040			CES #2026
Gross Site area	16,963	sf	
	0.389	acres	
Proposed Impervious Area			
Roof over new foundation (north side)	2,152	sf	
concrete Driveway	460	sf	
concrete walkway	72	sf	
		sf	
total on-site new + replaced =	**2,684**	**sf**	
existing impervious to remain =	0	sf	
total impervious =	2,684	sf	

STORM BMP's

50 -COMPOST AMENDED SOIL TO ALL DISTURBED AREAS (SEE DETAIL SHEET C3.5). TILL 2-3" OF COMPOST INTO UPPER 8" OF SOIL. LOOSEN COMPACTED SUBSOIL, IF NEEDED BY RIPPING TO 12" DEPTH. MULCH LANDSCAPE BEDS AFTER PLANTING.
51 -
52 -
53 -
54 -
55 -
56 -
57 -
58 -

MINIMUM 10% ORGANIC - COMPOST & MULCH SOIL REQUIRED

SOILS

SEE REPORT BY GEOTECH CONSULTANTS
REPORT MARCH 29, 2021
NATIVE SOIL IS MEDIUM-DENSE TO DENSE SILTY SAND
INFILTRATION IS INFEASIBLE DUE TO SOILS AND SLOPE

SURVEYOR

TOPOGRAPHIC SURVEY BY:
SITE SURVEYING
21923 NE 11th STREET
SAMMAMISH, WA 98074
PHONE 425-298-4412
www.sitesurveymapping.com

VERTICAL DATUM

NAVD 88 PER WCCS SURVEY CONTROL POINT ID NO. 8
SEE SURVEY

LEGAL DESCRIPTION

SEE C1.0

SOIL AMENDMENT REQUIRED

COMPOST AMENDED SOIL REQUIRED ON ALL LANDSCAPED AREAS AFTER CONSTRUCTION. SEE DETAIL ON C3.5.

SOIL INSPECTION REQUIRED BY ENGINEER

A POST CONSTRUCTION INSPECTION & CERTIFICATION OF AMENDED SOILS IS REQUIRED BY A LICENSED CIVIL ENGINEER.
THIS IS REQUIRED BEFORE FINAL SIGN-OFF BY CITY.

RKK

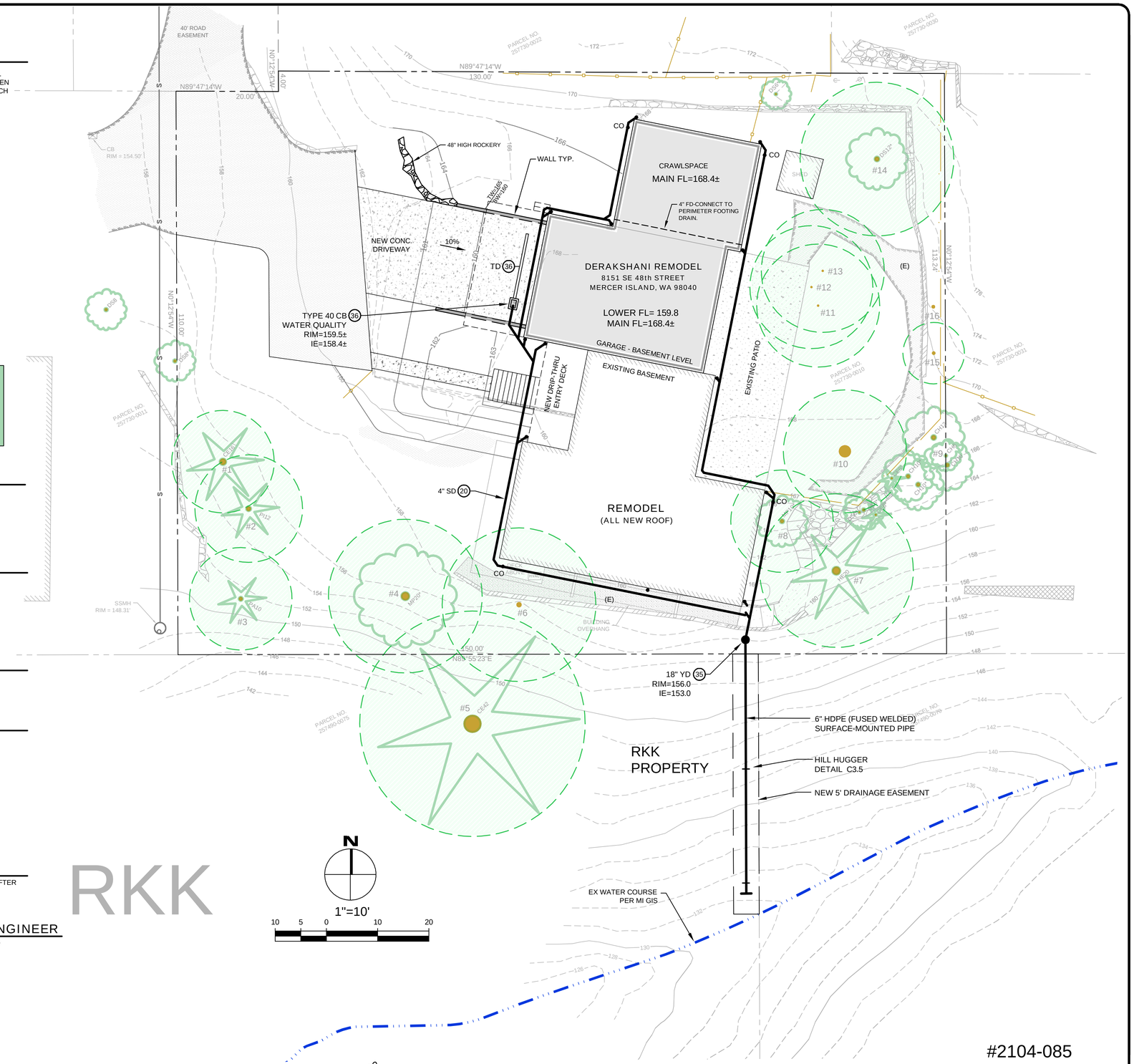

#2104-085

NO.	DATE	BY	REVISIONS

APPLICANT
KAM DERAKSHANI
8151 SE 48th STREET
MERCER ISLAND, WA 98040

DATE: Jun 08, 2022
JOB# 2026
DRAFTED: DE DESIGN: DE
DIGITAL SIGNATURE

Jun 08, 2022
JEFFREY E. DUFFY
STATE OF WASHINGTON
50708
REGISTERED PROFESSIONAL ENGINEER

CIVIL ENGINEERING SOLUTIONS
102 NW CANAL STREET SEATTLE, WA 98107
PHONE: 206.930.0342 DUFFY@CESOLUTIONS.US

DRAINAGE / CIVIL PLAN

DERAKSHANI REMODEL
8151 SE 48th STREET, MERCER ISLAND, WA 98040

DRAWING NO:
C2.0

APN 257730-0010
2104-085

MINIMUM 10% ORGANIC - COMPOST SOIL REQUIRED

SOIL AMENDMENT REQUIRED

COMPOST AMENDED SOIL REQUIRED ON ALL LANDSCAPED AREAS AFTER CONSTRUCTION. SEE DETAIL BELOW.

SOIL INSPECTION REQUIRED BY ENGINEER

A POST CONSTRUCTION INSPECTION & CERTIFICATION OF AMENDED SOILS IS REQUIRED BY A LICENSED CIVIL ENGINEER.
THIS IS REQUIRED BEFORE FINAL SIGN-OFF BY CITY.

"HILL HUGGER" DETAIL

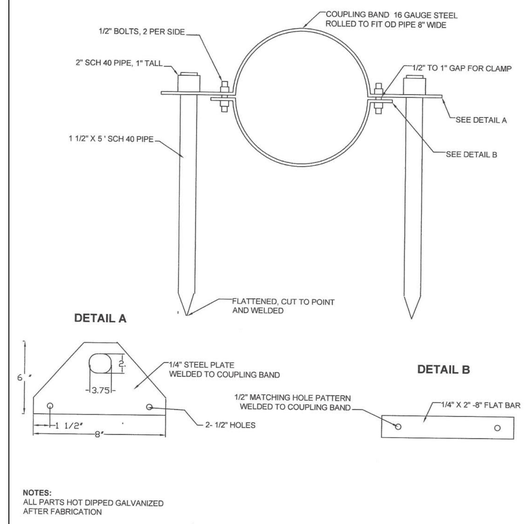

NOTES:
ALL PARTS HOT DIPPED GALVANIZED AFTER FABRICATION

PIPE ANCHOR ASSEMBLY
4 " to 8"

ATWOOD FABRICATING
P.O.BOX 12765 MILL CREEK, WA 98082
(425) 481-5388 FAX (425)486-4608

COMPOST AMENDED SOIL SPEC

AMENDMENT FOR LANDSCAPED AREAS

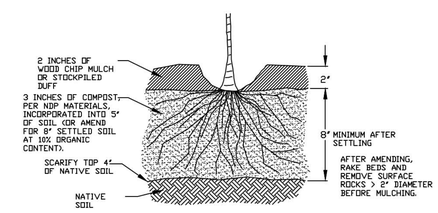

SOIL AMENDMENT FOR GRASS OR TURF AREAS

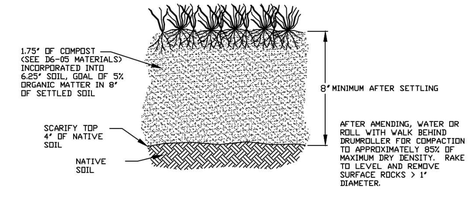

NOTES:

1. AMEND SOILS PER DOE MANUAL, VOL. V, 5.31, BMP T5.13, (2012 OR CURRENT) OR WWW.SOILSFORSALMON.ORG.
2. DO NOT AMEND SOILS IN AREAS WITH UNDISTURBED SOIL AND NATIVE VEGETATION.
3. OPTIONAL ALTERNATIVE: STOCKPILE NATIVE TOPSOIL ONSITE, AMEND IF NEEDED, AND REPLACE BEFORE PLANTING.
4. OPTIONAL ALTERNATIVE: IMPORT TOPSOIL MIX OF SUFFICIENT ORGANIC CONTENT AND DEPTH TO MEET REQUIREMENTS.

City of Bellevue — STORM AND SURFACE WATER UTILITY

TITLE: AMENDED SOILS

JANUARY 2021 — NO SCALE — NO. NDP-1

#2104-085

NO.	DATE	BY	REVISIONS

APPLICANT
KAM DERAKSHANI
8151 SE 48th STREET
MERCER ISLAND, WA 98040

DATE: Jun 07, 2022
JOB# 2026
DRAFTED: SS DESIGN: SS
DIGITAL SIGNATURE

Jun 07, 2022
STATE OF WASHINGTON — JEFFREY E. THOLAND — 39704 — REGISTERED PROFESSIONAL ENGINEER

CIVIL ENGINEERING SOLUTIONS
102 NW CANAL STREET
PHONE: 206.930.0342
SEATTLE, WA 98107
DUFFY@CESOLUTIONS.US

STORM, BMP DETAILS

DERAKSHANI REMODEL
8151 SE 48th STREET, MERCER ISLAND, WA 98040

DRAWING NO: C3.5

APN 257730-0010
2104-085