Ecological No Net Loss Assessment Report

Prepared for

Schoening Residence
2669 60th Ave SE
Mercer Island, WA 98040

Prepared by

Northwest Environmental Consulting, LLC

Northwest Environmental Consulting, LLC
600 N 36th Street, Suite 423
Seattle, WA 98103
206-234-2520

February 2022

Purpose

The purpose of this report is to fulfill the requirements of City of Mercer Island Municipal Code (MICC) 19.07.110 Shoreline Master Program by assessing overall project impacts and proposed mitigation to determine if the project meets the "No Net Loss" General Regulation of the Shoreline Master Program.

No Net Loss is defined as "An ecological concept whereby conservation losses in one geographic or otherwise defined area are equaled by conservation gains in function in another area."

Permits are being applied for a dock extension and repair.

Location

The subject property is located at 2669 60th Ave SE in the City of Mercer Island, Washington (Figure 1). The King County parcel number is 148330-0080. The parcel is on the waterfront of Lake Washington, which contains several endangered fish species and designated priority fish species.

Project Description

The proposed work is for normal maintenance and extension of an existing residential dock. The proposed work includes repairing 11 existing timber piles (8-inch to 12-inch) and installation of 6, 8-inch steel piles. A new 23-feet-10-inch long by 5-feet-10-inch dock extension will be constructed. The work includes permitting the existing boat lifts. See Attachment A – Project Drawings, Sheets A1.0 to A5.0.

During construction, a floating boom will surround the work barge, pier, and mooring piles. See Sheet A6.0

A shoreline planting plan will be completed using native species of trees and shrubs. (see Appendix A – Sheet A7.0 and A8.0).

Project drawings are included in Attachment A.

Approach

Northwest Environmental Consulting LLC (NWEC) biologists Brad Thiele conducted a site visit on February 23, 2022 to evaluate conditions on site and adjacent to the site. NWEC also consulted the following sources for information on potential critical fish and wildlife habitat along this shoreline:

- Washington Department of Fish and Wildlife (WDFW): Priority Habitats and Species online database (http://apps.wdfw.wa.gov/phsontheweb/)
- WDFW SalmonScape online database of fish distribution and ESA listing units

- Mercer Island GIS online database (https://chgis1.mercergov.org/Html5Viewer/Index.html?viewer=PubMaps&viewer=PubMaps)

Site Description

The subject property is in a residential neighborhood along the west shoreline of Mercer Island. Single-family houses are present along the shoreline to the south and to the north. Pictures of the site are included in Attachment B- Site Photos.

Existing structures on the property include a single-family residence and the dock.

The yard is landscaped with lawn and a gravel strip along the top of the rock bulkhead. A sandy seating area and stairs down to a cove are present north of the dock.

The shoreline is armored with a rock bulkhead. Substrates along the shoreline consist of sand and gravel shifting to gravel and cobble about 20 feet from the shoreline. Some Eurasian milfoil is present starting about 30 feet from shore.

The properties to the north and south have similar landscaping, bulkheads and docks.

Species Use

WDFW's PHS mapping and SalmonScape mapping tools show the following salmonid species using Lake Washington for migration and/or rearing: residential coastal cutthroat (*Oncorhynchus clarki*), winter steelhead (*O. mykiss*), Dolly Varden/bull trout (*Salvelinus malma*), sockeye salmon (*O. nerka*), fall Chinook (*O. tshawytscha*), coho salmon (*O. kisutch*), and kokanee (*O. nerka*). The Salmonscape database maps the site as accessible to the Endangered Species Units (ESU) of Threatened Chinook and steelhead. The project site is accessible to any fish migrating or rearing in the lake, but specific critical habitat for these species is not present at the subject parcel.

The area is mapped as possibly having sockeye spawning off shore.

There are no priority habitats directly associated with the project site for terrestrial species or mapped within a half mile of the site.

The Mercer Island GIS portal does not indicate any environmental features at the site.

Project Impacts and Conservation Measurements

Direct Impacts:

Sediments: Sediment disturbance will occur below the OHWM and along the shoreline of Lake Washington during pile repair and installation. Additionally, the tug and barge propwash may disturb sediments temporarily when making trips to/from the site.

Sediments are expected to be minimally disturbed during pile repair and installation. The coarse sediments (sand and cobbles) found at the site will lessen the chances of fine sediments becoming suspended. In addition, a floating boom surrounding the work area to contain floating

debris will be deployed (see BMP Notes on Sheet A6.0 in Appendix A). The project is expected to meet state water quality standards for turbidity.

New moorage will be placed in water approximately 8 to 13 feet deep minimizing potential turbidity caused during docking and castoff of watercraft.

Shoreline: The project will not affect the shoreline adversely. Planting vegetation will increase the habitat functions of the shoreline by creating shade along the shoreline that will be an improvement from the existing baseline habitat conditions at the project site.

Planting native vegetation will increase the habitat functions of the shoreline by creating shade along the shoreline that will be an improvement from the existing baseline habitat conditions at the project site. These plants will provide overhanging cover for fish, structural diversity for birds and wildlife, detritus for aquatic invertebrates and long-term recruitment of woody material and other allochthonous food sources. See Appendix A - Sheet A7.0 and A8.0 for the proposed planting plan.

Lakebed: The project will add 6 8-inch piles. This will result in 2.1 square feet of covered lakebed.

Noise: Construction equipment will create noise audible to neighbors and in-water. Noise disturbance will be short-term and should have negligible effects on fish and wildlife in the area. Work will be completed during the in-water work period when juvenile fish are not expected to be present.

Potential spills: Short-term risks include the potential for petroleum spills that can occur with any equipment operation. The potential for impact to the aquatic environment is expected to be minor because a spill containment measures that will be employed should a spill occur (see BMP Notes on Sheet A6.0 in Appendix A).

Shading: The proposed extension 139 square-foot-extension will use grated decking. The new Grated decking will be ThruFlow decking.

Grated decking allows more light to penetrate the water below a dock, which can increase productivity in the littoral zone below the dock, and reduce the full shade favored by salmonid predators. Salmonid predators are known to use hard shadowing under solid-decked docks to ambush juvenile salmonids. Reducing these hard shadows limits their preferred habitat under the dock.

ThruFlow grated decking has measured performance at 43 percent light penetration (ThruFlow, 2020). Thus, effective cover of the area is 57% of the area of a solid decked structure.

The project will add 139 square feet of grated decking over the lake surface. Using ThruFlow decking will reduce the effective overall coverage to 79 square feet.

Recreational Boating: The project supports continued recreational boating, which has been identified as a limiting factor for salmonid populations in Lake Washington. The dock will not introduce additional boating to Lake Washington, as the owners could still access the lake from a public boat launch or private moorage facility.

Best Management Practices: Applicable BMPs will be used, such as a floating boom around the in-water work area, to contain any floating debris that may escape during construction (see BMP Notes on Sheet A6.0 in Appendix A). The barge will have a perimeter containment sock to absorb oil and grease that might inadvertently wash from the barge during construction.

Hazardous material containment materials such as spill absorbent pads and trained personnel

will be required onsite during any phase of construction where machinery is in operation near surface waters.

Conclusion

Juvenile Chinook salmon, and other salmonids, rear and migrate along the Lake Washington shoreline.

There will be temporary impacts from noise and disturbed sediments during installation and repair of the pilings to repair and extend the dock. Pile size has been minimized to the smallest size possible and will be epoxy coated steel so no chemicals preservatives will leach into surrounding water.

The project will minimize construction effects on the environment by following the prescribed in water work window and use applicable BMPs to prevent construction spills and debris from escaping the area.

Using grated decking will reduce the effective coverage to an increase of 79 square feet minimizing the effects of overwater coverage. The new extension will also be in the deepest water possible. Placing the new moorage in deeper water will reduce the chances of propwash from docking and castoff. In addition, juvenile salmonids tend to use the nearshore during migration and the new moorage will be 59 feet from shore and less likely to slow outmigration times of juvenile salmonids. Salmonids may hesitate before passing underneath overwater structures.

The project will increase lakebed coverage by 2.1 square feet from pile installation.

A shoreline planting plan will be implemented and will add native trees and shrubs to the shoreline that will provide natural shading, allochthonous food sources and will eventually be a source of woody debris at the site offsetting the impacts from the dock extension in the long term.

The owner is paying into an in-lieu fee program that will be used for habitat projects in King County sponsored by the King County Conservation District.

This project has been designed to meet current residential dock standards and will use Best Management Practices to reduce project impacts. The conservation measures are designed to improve ecological functions or prevent further degradation of habitat and will result in **No Net Loss of ecological functions** at the site.

Document Preparers

Brad Thiele	Biologist	28 years of experience	Northwest Environmental Consulting, LLC (NWEC)

NWEC followed standard acceptable field methods and protocols at the time work was performed. These standards may include delineation of wetland and stream boundaries, characterization, rating, functional analyses, impact assessments and mitigation of impacts. The conclusions and findings in this report are based on field observations and measurements and represent our best professional judgment and to some extent rely on other professional service firms and available site information. Within the limitations of project scope, budget, and

seasonal variations, we believe the information provided herein is accurate and true to the best of our knowledge. Northwest Environmental Consulting does not warrant any assumptions or conclusions not expressly made in this report or based on information or analyses other than what is included herein.

REFERENCES

US Army Corps of Engineers (USACE). 2004. Final Biological Evaluation, Regional General Permit: Construction of New or Expansion of Existing Residential Overwater Structures and Driving of Moorage Piling. Lake Washington, Lake Sammamish, the Sammamish River and Lake Union, Including the Lake Washington Ship Canal, in the State of Washington.

Washington Department of Fish and Wildlife (WDFW). 2022. Priority Habitats and Species. Online database. Accessed February 2022 at http://apps.wdfw.wa.gov/phsontheweb/

WDFW. 2022. SalmonScape. Online database. Accessed February 2022 at http://apps.wdfw.wa.gov/salmonscape/

Appendix A:
Project Drawings

SITE PLAN

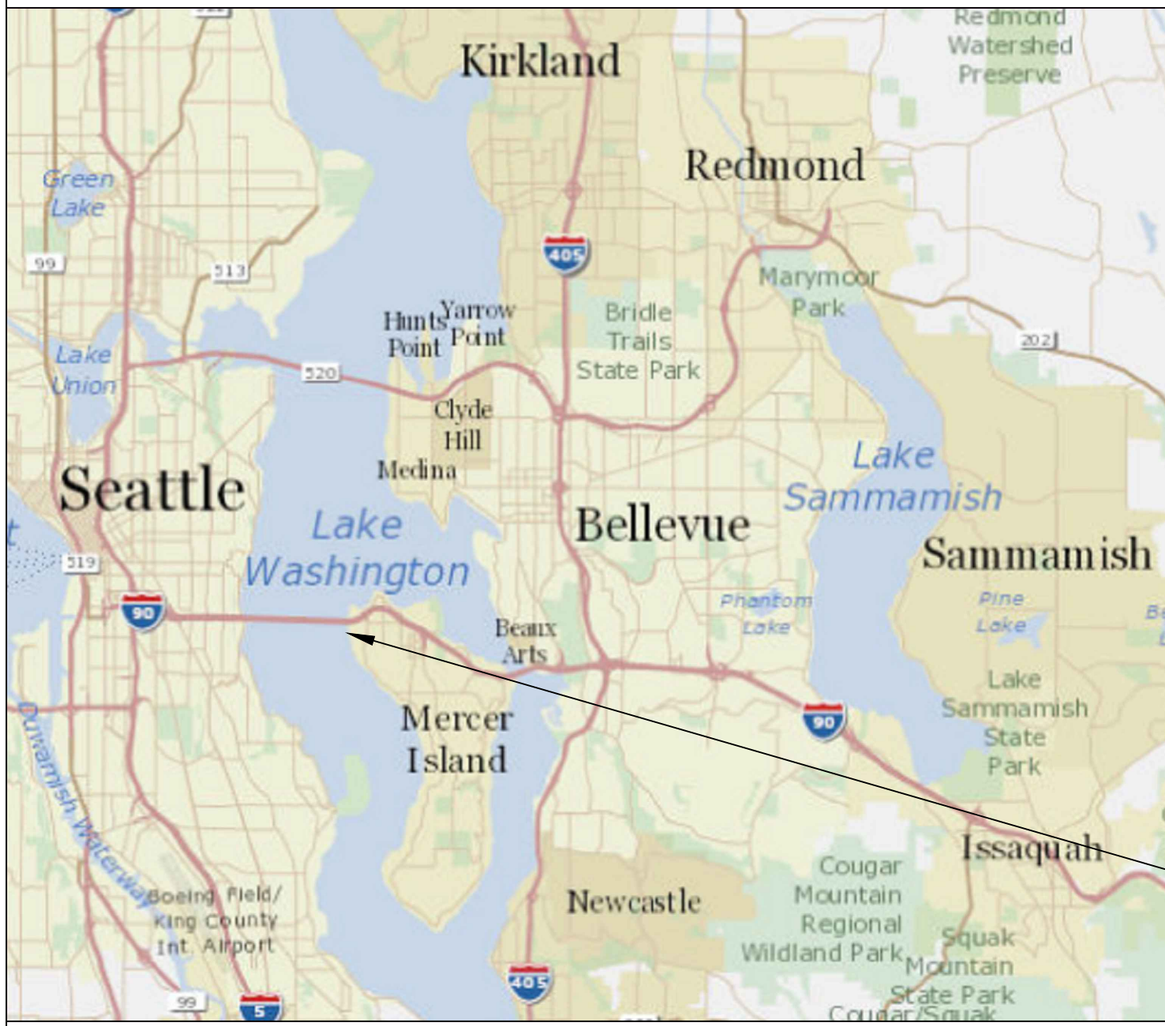

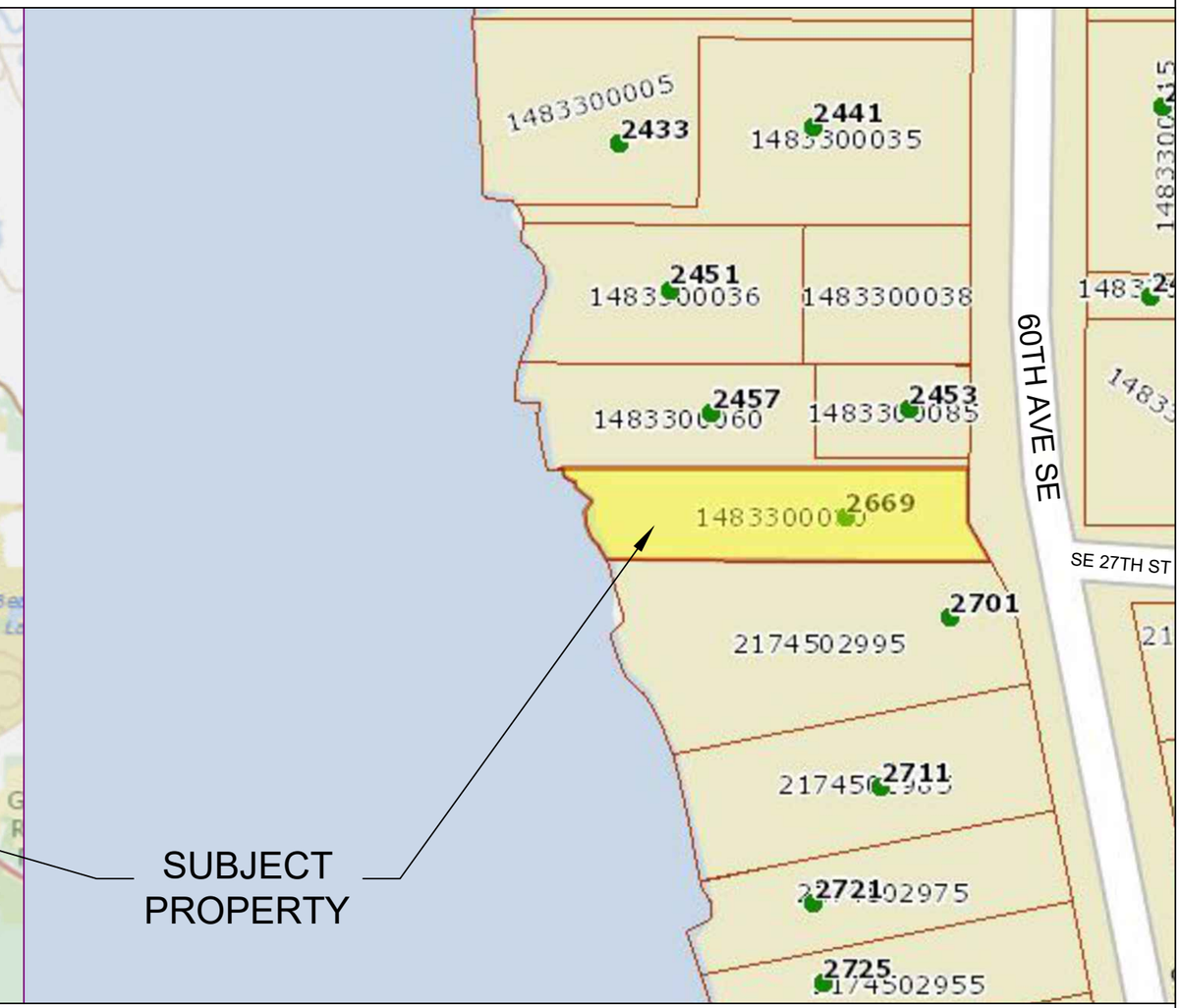

Pin: 148330-0080

Legal Description: CENTRAL ADD TO EAST SEATTLE S 22.50 FT OF 16 BLK 1 & S 22.50 FT OF 1-2-3 BLK 2 SD ADD & VAC ALLEY & 1/2 VAC ST ADJ & SH LDS ADJ

Plat Block: 1 &
Plat Lot: 16

LAT: 47.58719 LONG: -122.25366

BUILT BY SEABORN · ESTD 1947 ·

Seaborn Pile Driving
1080 W Ewing St
Seattle, WA 98119

Office: 206-236-1700 ext. 3
www.seabornpiledriving.com

Scope of Work: We propose to repair (1) mooring pile, repair (10) dock piles, drive (6) piles, permit (2) boat lifts, and construct a 139 sqft extension made of grated decking material.

County: King County
Location: Lake Washington

Applicant: Schoening Residence
2669 60th Ave SE
Mercer Island, WA 98040

Created: 01/15/22

Last Updated: 2/4/2022 12:25 PM Dray

Datum: CORPS OF ENGINEERS 1919
NE Quarter Of Section 11, Township 24, Range 04

Adjacent Owners:
TUTLAND ROBERT E
2701 60TH AVE SE 98040
CHAK CHEUNG
2457 60TH AVE SE 98040

SHEET A1.0

EXISTING CONDITIONS

CLEAN UP LAKE AROUND PROJECT

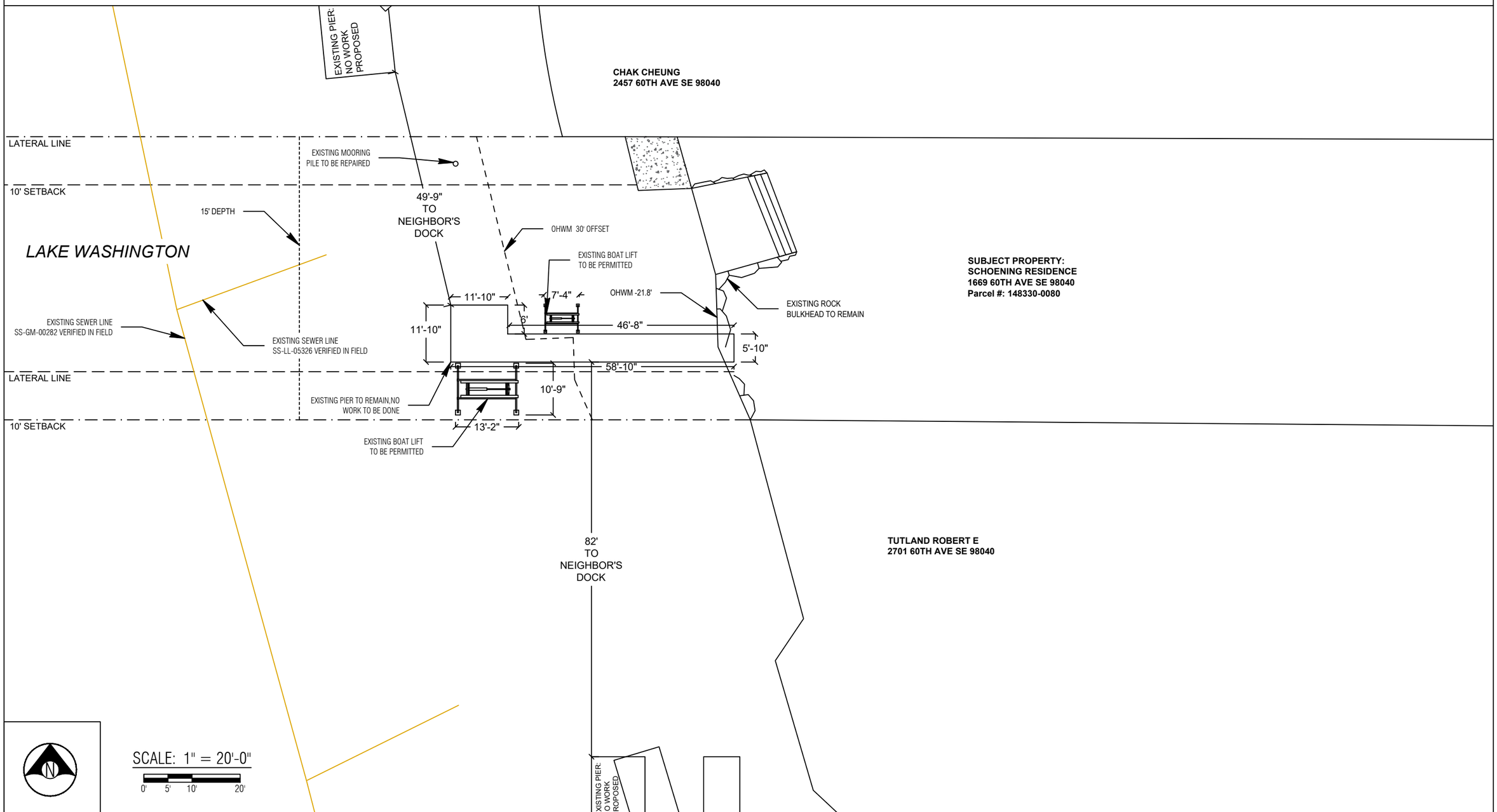

County: King County
Location: Lake Washington

Applicant: Schoening Residence
2669 60th Ave SE
Mercer Island, WA 98040

Created: 01/15/22

Last Updated: 2/4/2022 12:25 PM Dray

Datum: CORPS OF ENGINEERS 1919
NE Quarter Of Section 11, Township 24, Range 04

Adjacent Owners:
TUTLAND ROBERT E
2701 60TH AVE SE 98040
CHAK CHEUNG
2457 60TH AVE SE 98040

BUILT BY SEABORN · ESTD 1947 ·

Seaborn Pile Driving
1080 W Ewing St
Seattle, WA 98119

Office: 206-236-1700 ext. 3
www.seabornpiledriving.com

Scope of Work: We propose to repair (1) mooring pile, repair (10) dock piles, drive (6) piles, permit (2) boat lifts, and construct a 139 sqft extension made of grated decking material.

SHEET A2.0

PROPOSED CONDITIONS

CLEAN UP LAKE AROUND PROJECT

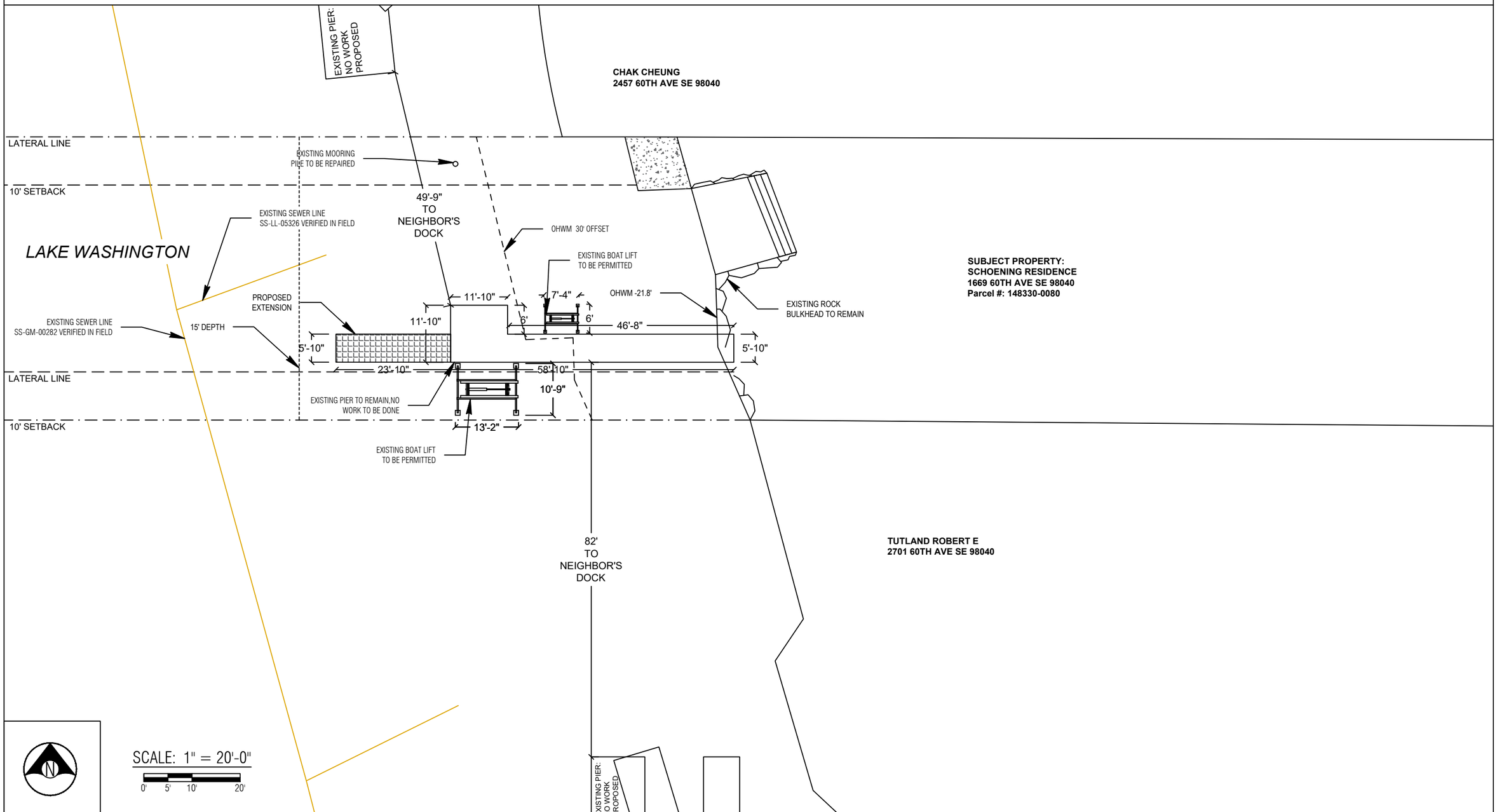

County: King County
Location: Lake Washington

Applicant: Schoening Residence
2669 60th Ave SE
Mercer Island, WA 98040

Created: 01/15/22

Last Updated: 2/4/2022 12:25 PM Dray

Datum: CORPS OF ENGINEERS 1919
NE Quarter Of Section 11, Township 24, Range 04

Adjacent Owners:
TUTLAND ROBERT E
2701 60TH AVE SE 98040
CHAK CHEUNG
2457 60TH AVE SE 98040

BUILT BY SEABORN · ESTD 1947 ·

Seaborn Pile Driving
1080 W Ewing St
Seattle, WA 98119

Office: 206-236-1700 ext. 3
www.seabornpiledriving.com

Scope of Work: We propose to repair (1) mooring pile, repair (10) dock piles, drive (6) piles, permit (2) boat lifts, and construct a 139 sqft extension made of grated decking material.

SHEET A3.0

PIER DETAILS - EXISTING/PROPOSED

LEGEND

- (10) EXISTING PILES - TO BE REPAIRED
- (1) EXISTING MOORING PILE - TO BE REPAIRED
- (6) PROPOSED STEEL PILES - TO BE ADDED

Area: 414 (existing dock, no work to be done)
Area: 139 sqft (new grated decking)

**Grated decking is 43% light permeable

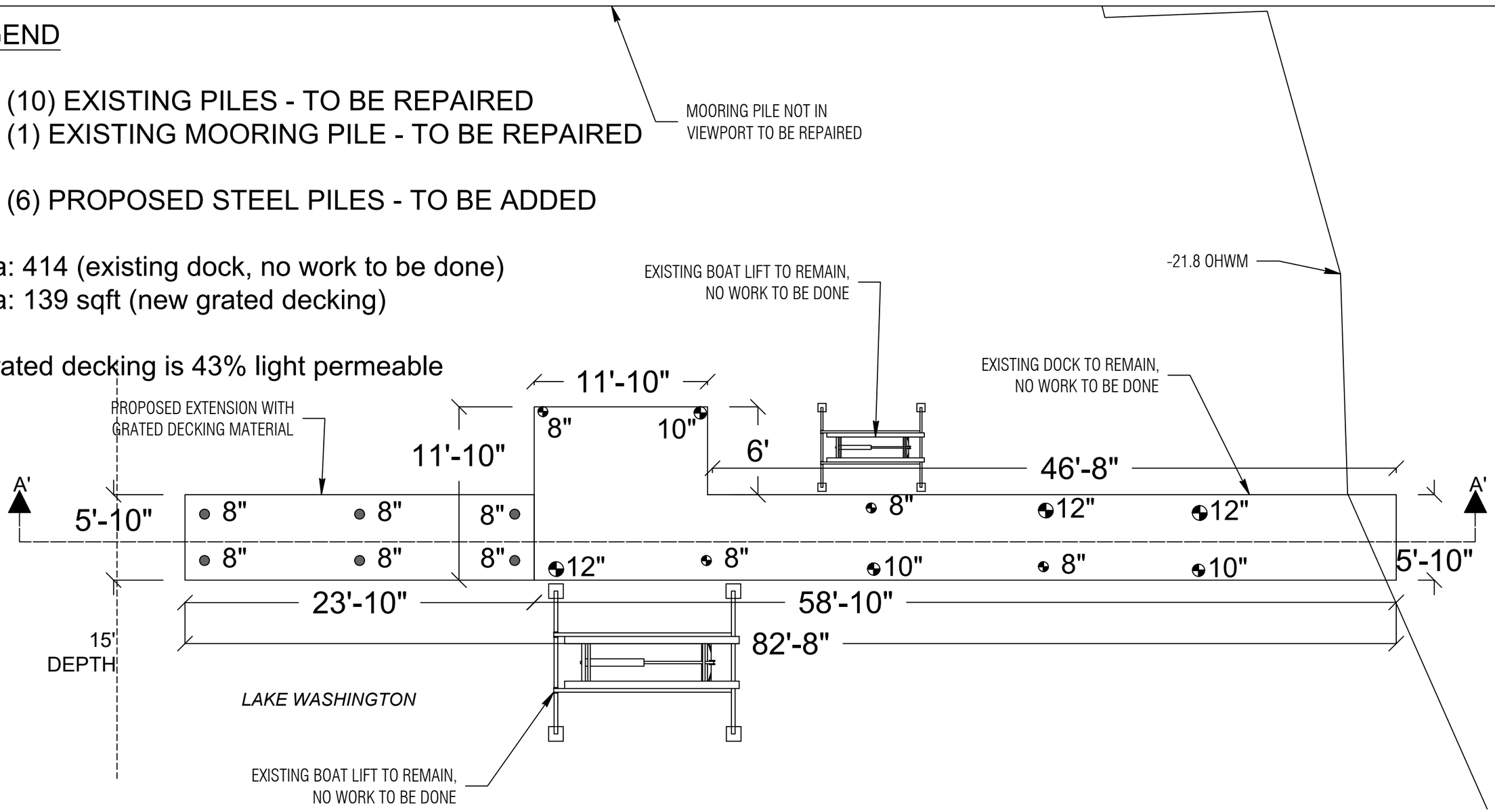

PLAN VIEW

BUILT BY SEABORN · ESTD 1947 ·

Seaborn Pile Driving
1080 W Ewing St
Seattle, WA 98119

Office: 206-236-1700 ext. 3
www.seabornpiledriving.com

Scope of Work: We propose to repair (1) mooring pile, repair (10) dock piles, drive (6) piles, permit (2) boat lifts, and construct a 139 sqft extension made of grated decking material.

County: King County
Location: Lake Washington

Applicant: Schoening Residence
2669 60th Ave SE
Mercer Island, WA 98040

Created: 01/15/22
Last Updated: 2/4/2022 12:25 PM Dray

Datum: CORPS OF ENGINEERS 1919
NE Quarter Of Section 11, Township 24, Range 04

Adjacent Owners:
TUTLAND ROBERT E
2701 60TH AVE SE 98040
CHAK CHEUNG
2457 60TH AVE SE 98040

SHEET A4.0

PIER DETAILS EXISTING/PROPOSED

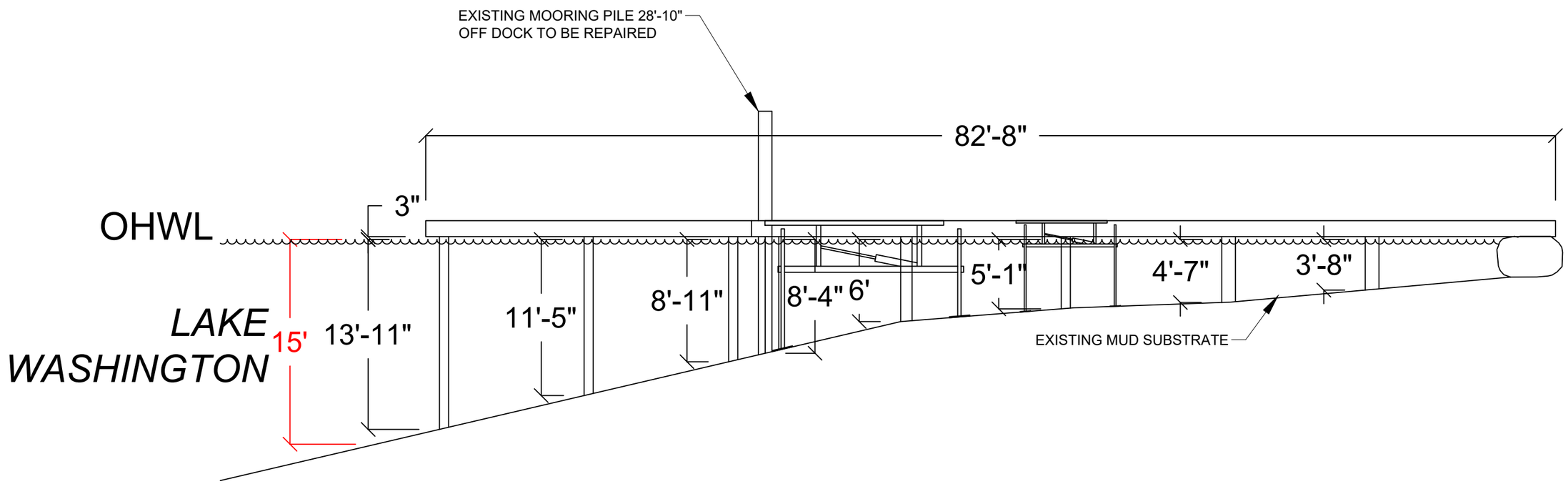

SECTION VIEW: A'-A'

BUILT BY SEABORN · ESTD 1947 ·

Seaborn Pile Driving
1080 W Ewing St
Seattle, WA 98119

Office: 206-236-1700 ext. 3
www.seabornpiledriving.com

Scope of Work: We propose to repair (1) mooring pile, repair (10) dock piles, drive (6) piles, permit (2) boat lifts, and construct a 139 sqft extension made of grated decking material.

County: King County
Location: Lake Washington

Applicant: Schoening Residence
2669 60th Ave SE
Mercer Island, WA 98040

Created: 01/15/22
Last Updated: 2/4/2022 12:25 PM Dray

Datum: CORPS OF ENGINEERS 1919
NE Quarter Of Section 11, Township 24, Range 04

Adjacent Owners:
TUTLAND ROBERT E
2701 60TH AVE SE 98040
CHAK CHEUNG
2457 60TH AVE SE 98040

SHEET A5.0

BMP INFORMATION

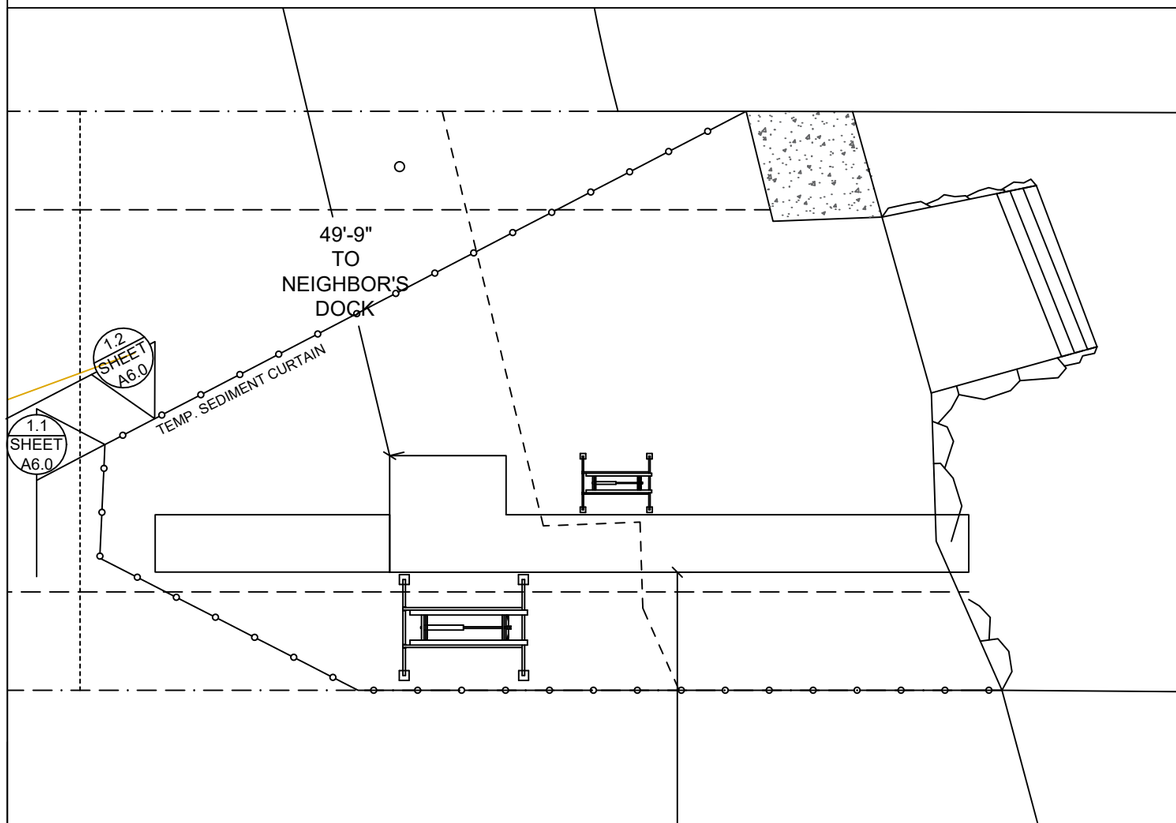

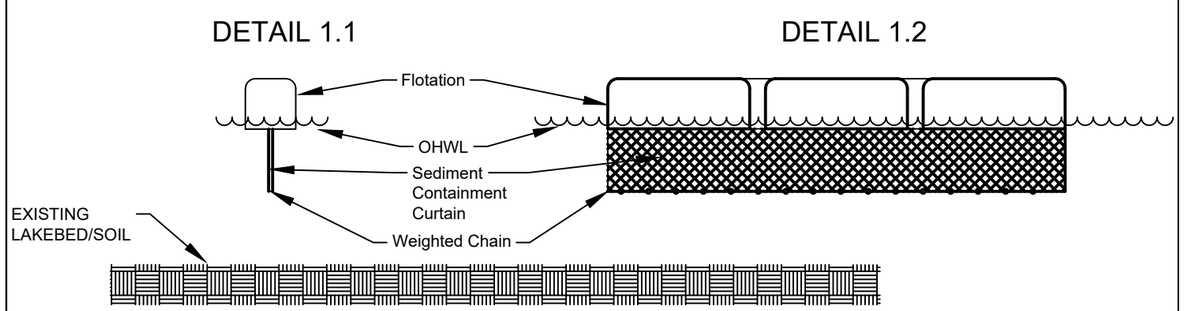

DETAIL 1.1 & 1.2

BMP NOTES:

A. Constant vigilance shall be kept for the presence of protected fish species during all aspects of the proposed action, particularly during in-water activities such as vessel movement, deployment of anchors & spuds, pile driving, dredging, and placement of gravels and other fill.

1. The project manager shall designate an appropriate number of competent observers to survey the project site and adjacent areas for protected species, including the presence of fish as conditions allow.
2. Visual surveys shall be made prior to the start of work each day, and prior to resumption of work following any break of more than an hour. Periodic additional visual surveys throughout the work day are strongly recommended.
3. All in-water work shall be done during the in-water work window for the waterbody. Where there is a difference between the USCOE and WDFW work windows, the overlap of the two shall apply.
4. All pile driving and extraction shall be postponed or halted when obvious aggregations or schooling of fish are observed within 50 yards of that work, and shall only begin/resume after the animals have voluntarily departed the area.
5. When piloting vessels, vessel operators shall operate at speeds and power settings to avoid grounding vessels, and minimize substrate scour and mobilization of bottom sediments.

B. No contamination of the marine environment shall result from project-related activities.

1. Appropriate materials to contain and clean potential spills shall be stored and readily available at the work site and/or aboard project-related vessels.
2. The project manager and heavy equipment operators shall perform daily pre-work equipment inspections for cleanliness and leaks. All heavy equipment operations shall be postponed or halted should a leak be detected, and shall not proceed until the leak is repaired and the equipment is cleaned.
3. To the greatest extent practicable, utilize biodegradable oils for equipment that would be operated in or near water.
4. Fueling of land-based vehicles and equipment shall take place at least 50 feet away from the water, preferably over an impervious surface. Fueling of vessels shall be done at approved fueling facilities.
5. Turbidity and siltation from project-related work shall be minimized and contained through the appropriate use of erosion control practices, effective silt containment devices, and the curtailment of work during adverse weather and tidal/flow conditions.
6. All wastes shall be collected and contained for proper disposal at approved upland disposal sites appropriate for the material(s).
7. When removing piles and other similarly treated wood, containment booms must fully enclose the work area. Wood debris, oils, and any other materials released into lake waters must be collected, removed, and properly disposed of at approved disposal sites.
8. All in- and over-water wood cutting would be limited to the minimum required to remove the subject wood component, and all cutting work should be enclosed within floating containment booms.
9. When removing piles, no actions shall be taken that would cause adhering sediments to return to lake waters.
10. Above-water containment shall be installed around removed piles to prevent sediment laden waters from returning to lake waters.
11. Construction staging (including stocking of materials, etc.) will occur on the supply barge.
12. All Exposed wood to be used on the project will be treated with a cheminite treatment.

BUILT BY SEABORN · ESTD 1947 ·

Seaborn Pile Driving
1080 W Ewing St
Seattle, WA 98119

Office: 206-236-1700 ext. 3
www.seabornpiledriving.com

Scope of Work: We propose to repair (1) mooring pile, repair (10) dock piles, drive (6) piles, permit (2) boat lifts, and construct a 139 sqft extension made of grated decking material.

County: King County
Location: Lake Washington

Applicant: Schoening Residence
2669 60th Ave SE
Mercer Island, WA 98040

Created: 01/15/22
Last Updated: 2/4/2022 12:25 PM Dray

Datum: CORPS OF ENGINEERS 1919
NE Quarter Of Section 11, Township 24, Range 04

Adjacent Owners:
TUTLAND ROBERT E
2701 60TH AVE SE 98040
CHAK CHEUNG
2457 60TH AVE SE 98040

SHEET A6.0

MITIGATION PLAN

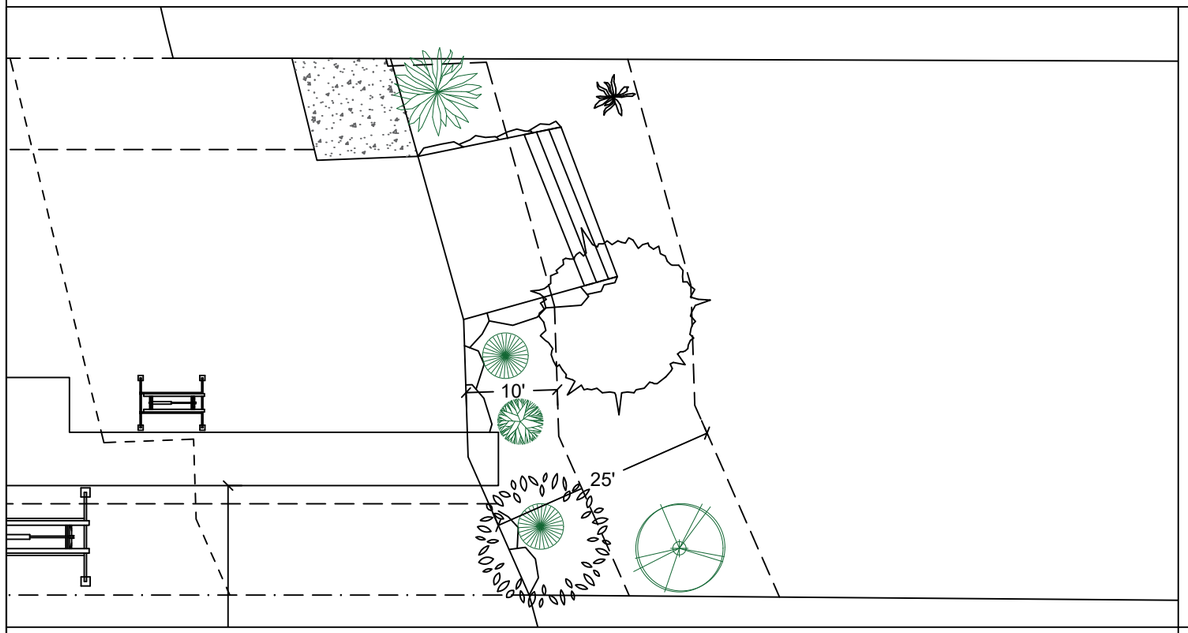

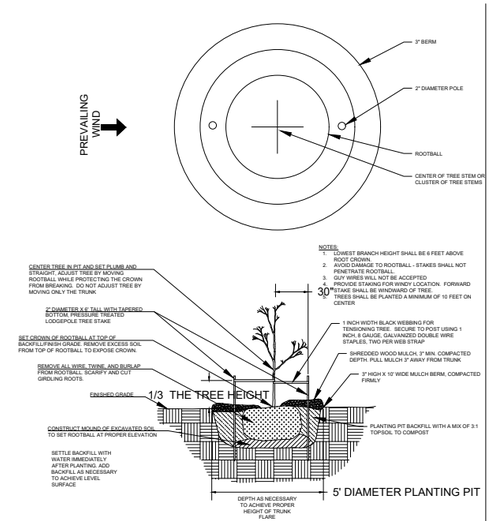

TREE PLANTING DETAILS (NTS)

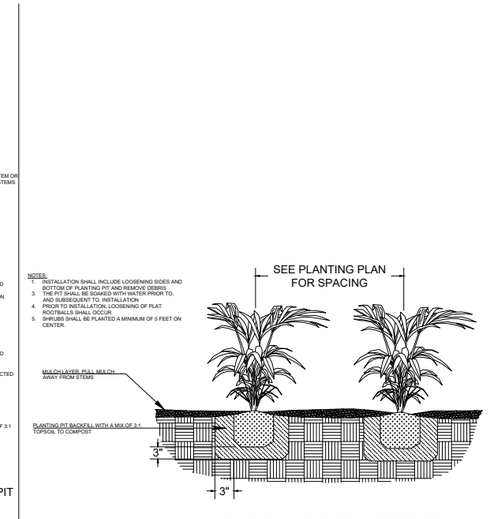

SHRUB AND GROUNDCOVER PLANTING DETAILS (NTS)

Notes:

1. Shrubs are show, and shall be planted, at least five feet on center. Trees are show, and shall be planted, at least ten feet to center.
2. The property owner will implement and abide by the shoreline planting plan. The plants shall be installed before or concurrent with the work authorized by this permit. A report, as-built drawing and photographs demonstrating the plants have been installed or a report on the status of project construction will be submitted to the U.S. Army Corps of Engineers, Seattle District, Regulatory Branch, within 12 months from the date of permit issuance. This reporting requirement may be met by completing and submitting a U.S. Army Corps of Engineers approved Report for Mitigation Work Completion form.
3. The property owner will maintain and monitor the survival of installed shoreline plantings for five years after the U.S. Army Corps of Engineers accepts the as-built report. Installed plants shall achieve 100% survival during monitoring Years 1 and 2. Installed plants shall achieve at least 80% survival during monitoring Years 3, 4 and 5. Percent survival is based on the total number of plants installed in accordance with the approved riparian planting plan. Individual plants that die will be replaced with native riparian species in order to meet the survival performance standards.
4. The property owner will provide annual monitoring reports for five years (Monitoring Years 1-5). Each annual monitoring report will include written and photographic documentation on plant mortality and replanting efforts and will document whether the performance standards are being met. Photos will be taken from established points and used repeatedly for each monitoring year. In addition to photos at designated points, photo documentation will include a panoramic view of the entire planting area. Submitted photos will be formatted on standard 8 1/2 x 11" paper, dated with the date the photo was taken, and clearly labeled with the direction from which the photo was taken. The photo location points will be identified on an appropriate drawing. Annual shoreline planting monitoring reports will be submitted to the U.S. Army Corps of Engineers, Seattle District, Regulatory Branch, by November 31 of each monitoring year. This reporting requirement may be met by completing and submitting a U.S. Army Corps of Engineers approved Mitigation Planting Monitoring Report form.

PROPOSED PLANTING SPECIES/QUANTITIES

SYMBOL	LATIN NAME	COMMON NAME	QTY	SIZE
	Thuja picatta	Western Redcedar	1	3 ft
	Pinus contorta v contorta	Shore pine	1	3 ft
	Rosa nutkana	Nootka Rose	1	1 Gallon
	Philadelphus lewisii	Mock Orange	2	1 Gallon

PLANTS: Shrubs to be installed 5ft on center and trees to be installed 10ft on center.

County: King County
Location: Lake Washington

Applicant: Schoening Residence
2669 60th Ave SE
Mercer Island, WA 98040

Created: 01/15/22
Last Updated: 2/4/2022 12:25 PM Dray

Datum: CORPS OF ENGINEERS 1919
NE Quarter Of Section 11, Township 24, Range 04

Adjacent Owners:
TUTLAND ROBERT E
2701 60TH AVE SE 98040
CHAK CHEUNG
2457 60TH AVE SE 98040

BUILT BY SEABORN · ESTD 1947 ·

Seaborn Pile Driving
1080 W Ewing St
Seattle, WA 98119

Office: 206-236-1700 ext. 3
www.seabornpiledriving.com

Scope of Work: We propose to repair (1) mooring pile, repair (10) dock piles, drive (6) piles, permit (2) boat lifts, and construct a 139 sqft extension made of grated decking material.

SHEET A7.0

EXISTING PLANT PLAN

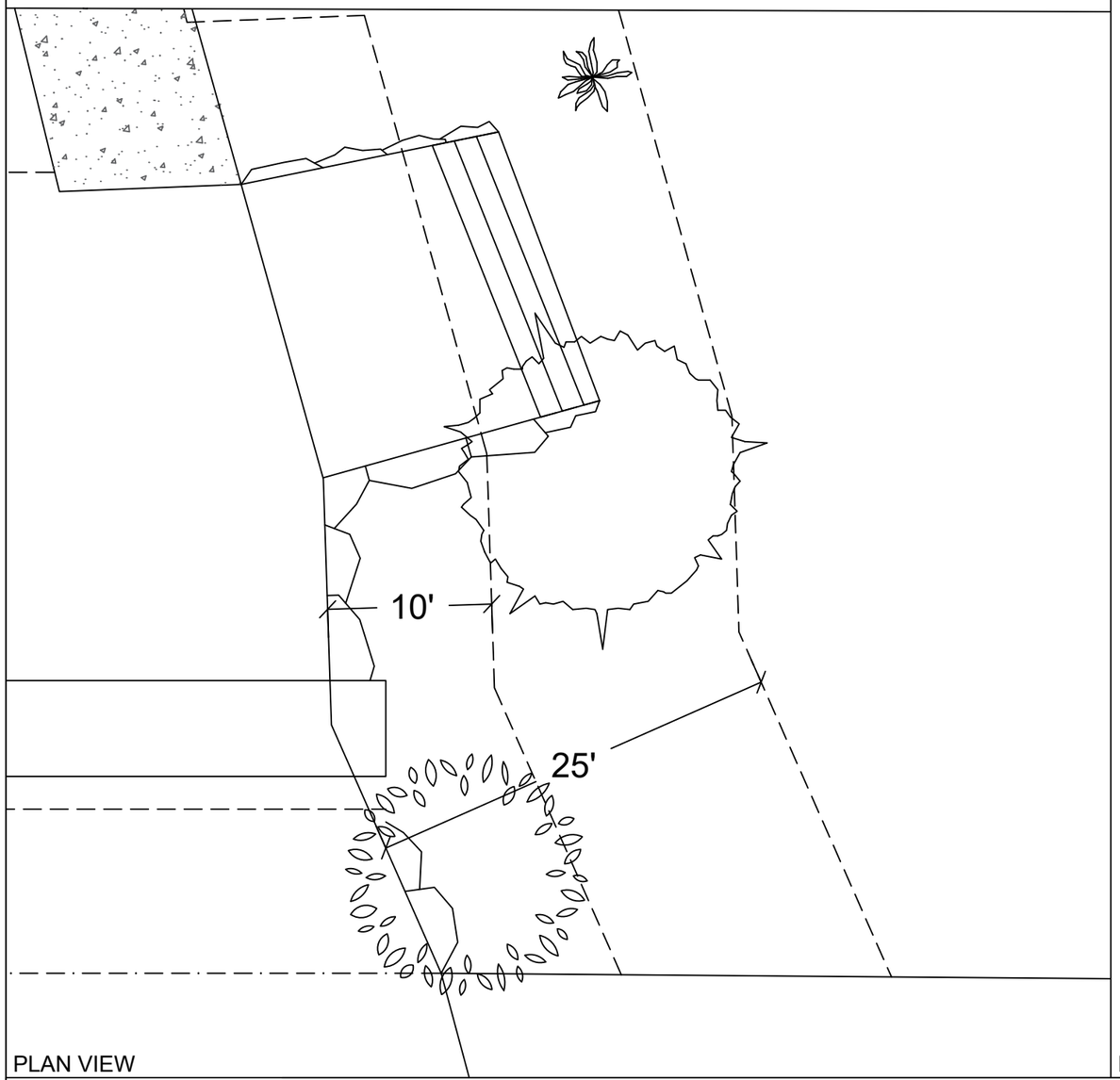

PLAN VIEW

EXISTING PLANTING SPECIES/QUANTITIES

SYMBOL	SCIENTIFIC NAME	COMMON NAME	QTY	SIZE
	Cosmos bipinnatus	Garden Cosmos	1	-3ft
	Cladrastis kentukea	Yellowwood	1	~10ft
	Betula pendula	Weeping white birch tree	1	~ 12ft

EXISTING PLANTS TABLE

County: King County
Location: Lake Washington

Applicant: Schoening Residence
2669 60th Ave SE
Mercer Island, WA 98040

Created: 01/15/22

Last Updated: 2/4/2022 12:25 PM Dray

Datum: CORPS OF ENGINEERS 1919
NE Quarter Of Section 11, Township 24, Range 04

Adjacent Owners:
TUTLAND ROBERT E
2701 60TH AVE SE 98040
CHAK CHEUNG
2457 60TH AVE SE 98040

BUILT BY SEABORN · ESTD 1947 ·

Seaborn Pile Driving
1080 W Ewing St
Seattle, WA 98119

Office: 206-236-1700 ext. 3
www.seabornpiledriving.com

Scope of Work: We propose to repair (1) mooring pile, repair (10) dock piles, drive (6) piles, permit (2) boat lifts, and construct a 139 sqft extension made of grated decking material.

SHEET A8.0

GENERAL NOTES:

MATERIALS SPEC LIST:

Boat Lifts:

* SL10014ARW - 72" x 88"
* SL8012ARW - 158" x 129"

Decking Material: FRPP - Fiberglass reinforced polypropylene
Light permeable percentage:

* Surface - 43%
* 18" Dock Height - 61%

SEWER:

* All sewer is field verified by probing the lake bed manually during the allowed work windows for the area.

PILES:

* All new piles are epoxy coated steel piles *size varies, see plan set
* Repair piles are done as a sleeve/strap method
* Piles are driven using the vibro method

CODE REFERENCES: MERCER ISLAND

We are applying for the permit to be reviewed under the:
"Alternative Development Standards" per MIMC 19.13050(F)(3).
The code official shall approve moorage facilities not in compliance with the development standards in subsection (F)(1) or (F)(2) of this section subject to both U.S. Army Corps of Engineers and Washington Department of Fish and Wildlife approval to an alternate project design. The following requirements and all other applicable provisions in this chapter shall be met:

i. The dock must be no larger than authorized through state and federal approval; Ch. 19.13 Shoreline Master Program Mercer Island City Code Page 30 of 34 The Mercer Island City Code is current through Ordinance 20C-13, passed June 16, 2020.

The dock length is in compliance.

ii. The maximum width must comply with the width of moorage facilities standards specified in standards specified in subsection D of this section (Table D);

The maximum width is in compliance.

iii. The minimum water depth must be no shallower than authorized through state and federal approval;

The minimum water depth is in compliance.

iv. The applicant must demonstrate to the code official's satisfaction that the proposed project will not create a net loss in ecological function of the shorelands; and

No net loss report is attached.

v. The applicant must provide the city with documentation of approval of the moorage facilities by both the U.S. Army Corps of Engineers and the Washington Department of Fish and Wildlife.

The plan set is under review by CORPS and WDFW.

Last permit issued for property: Building 10/12/2015
Concrete Slab Permitted: 1/11/1996
Dock established/constructed: 1/24/1989

County: King County
Location: Lake Washington

Last Updated: 2/4/2022 12:25 PM Dray

Applicant: Schoening Residence
2669 60th Ave SE
Mercer Island, WA 98040

Created: 01/15/22

Datum: CORPS OF ENGINEERS 1919
NE Quarter Of Section 11, Township 24, Range 04

Adjacent Owners:
TUTLAND ROBERT E
2701 60TH AVE SE 98040
CHAK CHEUNG
2457 60TH AVE SE 98040

BUILT BY SEABORN · ESTD 1947 ·

Seaborn Pile Driving
1080 W Ewing St
Seattle, WA 98119

Office: 206-236-1700 ext. 3
www.seabornpiledriving.com

Scope of Work: We propose to repair (1) mooring pile, repair (10) dock piles, drive (6) piles, permit (2) boat lifts, and construct a 139 sqft extension made of grated decking material.

DETAILS - REPAIR

S1 DETAIL NOT IN USE

S2 DETAIL NOT IN USE

S3 DETAIL NOT IN USE

S4 DETAIL NOT IN USE

STEEL SLEEVE TABLE				
PILE Ø	MAX SPLICE HEIGHT	S1	S2	S3
9"	15"	6"	12"	3"
12"+	28"	6"	12"	3"

NOTES:
1) MAX PILE LOAD = 1,200 # / PILE (BOAT LOAD PARALLEL TO DOCK).
CONTACT ENGINEERING IF BOAT SIZE EXCEEDS GENERAL NOTES MAXIMUM ALLOWABLE.
2) MINIMUM BOLT SPACING = 3"
3) STRAP AXIS SHALL BE ORIENTED PERPENDICULAR TO LONGITUDINAL AXIS OF DOCK.

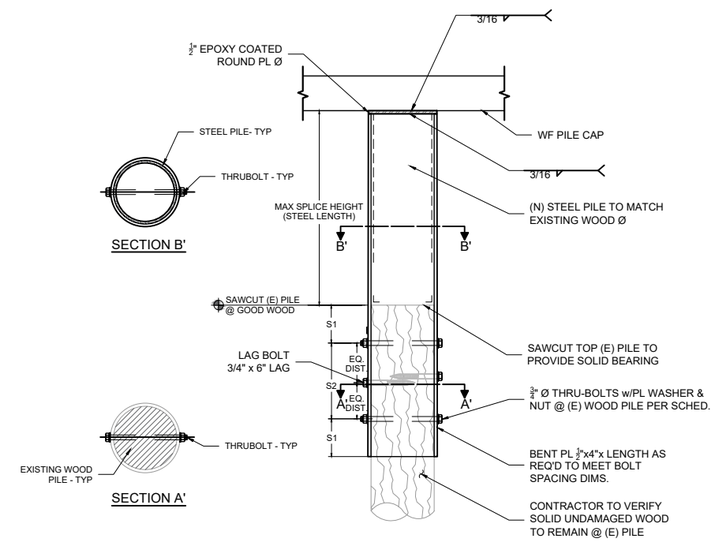

S5 SPLICE PILE REPAIR - TYP
SCALE: 1/2" - 1'

BUILT BY SEABORN · ESTD 1947 ·

Seaborn Pile Driving
1080 W Ewing St
Seattle, WA 98119

Office: 206-236-1700 ext. 3
www.seabornpiledriving.com

Scope of Work: We propose to repair (1) mooring pile, repair (10) dock piles, drive (6) piles, permit (2) boat lifts, and construct a 139 sqft extension made of grated decking material.

County: King County
Location: Lake Washington

Applicant: Schoening Residence
2669 60th Ave SE
Mercer Island, WA 98040

Created: 01/15/22

Last Updated: 2/4/2022 12:25 PM Dray

Datum: CORPS OF ENGINEERS 1919
NE Quarter Of Section 11, Township 24, Range 04

Adjacent Owners:
TUTLAND ROBERT E
2701 60TH AVE SE 98040
CHAK CHEUNG
2457 60TH AVE SE 98040

SHEET
A10.0

DETAILS - TRACK

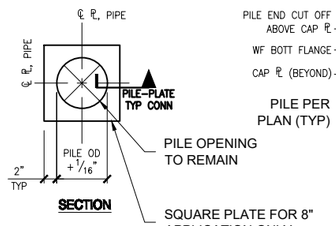

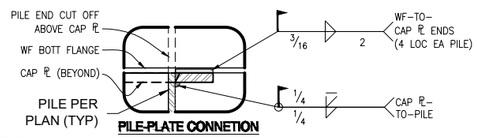

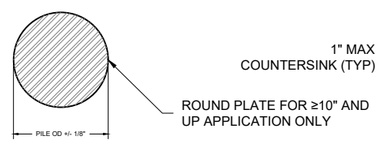

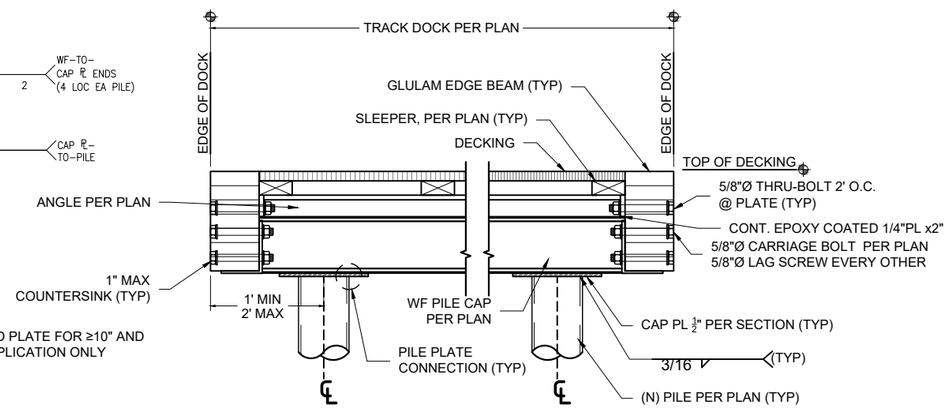

S1 DOCK SECTION w/PILES - TYP
SCALE: 1" - 1'

S3 DETAIL NOT IN USE

S4 DETAIL NOT IN USE

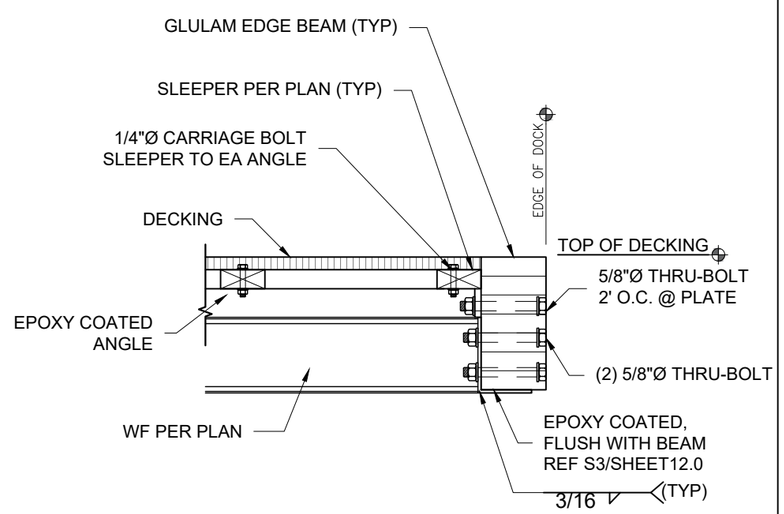

S5 EDGE SECTION (STEEL TRACK) - TYP
SCALE: 1" - 1'

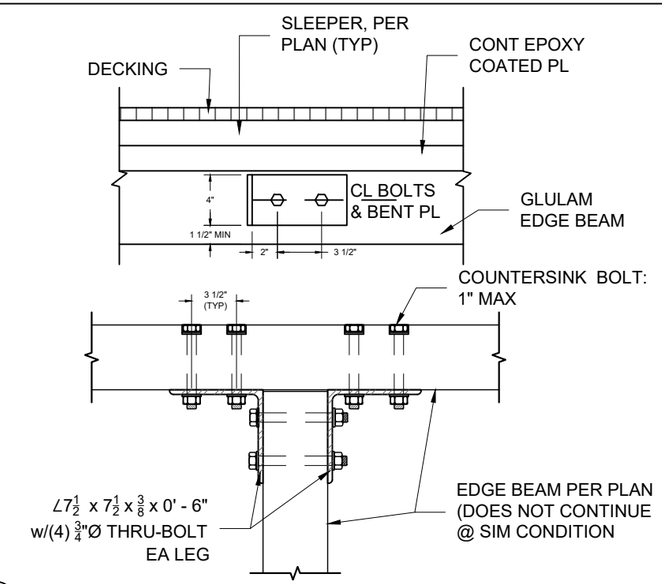

S6 BEAM TO BEAM - TYP
SCALE: 1" - 1'

BUILT BY SEABORN · ESTD 1947 ·

Seaborn Pile Driving
1080 W Ewing St
Seattle, WA 98119

Office: 206-236-1700 ext. 3
www.seabornpiledriving.com

Scope of Work: We propose to repair (1) mooring pile, repair (10) dock piles, drive (6) piles, permit (2) boat lifts, and construct a 139 sqft extension made of grated decking material.

County: King County
Location: Lake Washington

Applicant: Schoening Residence
2669 60th Ave SE
Mercer Island, WA 98040

Created: 01/15/22

Last Updated: 2/4/2022 12:25 PM Dray

Datum: CORPS OF ENGINEERS 1919
NE Quarter Of Section 11, Township 24, Range 04

Adjacent Owners:
TUTLAND ROBERT E
2701 60TH AVE SE 98040
CHAK CHEUNG
2457 60TH AVE SE 98040

SHEET 11.0

NWS-2021-XXX
PAGE 11 OF 12

DETAILS - TRACK

S1 DETAIL NOT IN USE

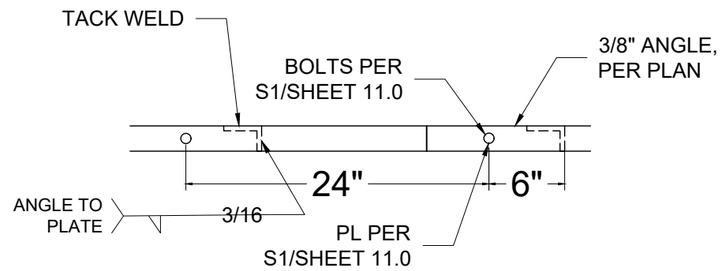

S2 ANGLE TO PLATE - TYP
SCALE: 1" - 1'

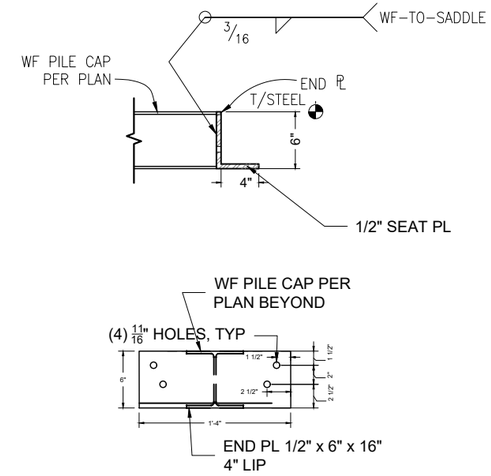

S3 BEAM SADDLE BRACKET
SCALE: 3/4" - 1'

S4 DETAIL NOT IN USE

S5 DETAIL NOT IN USE

S6 DETAIL NOT IN USE

BUILT BY SEABORN · ESTD 1947 ·

Seaborn Pile Driving
1080 W Ewing St
Seattle, WA 98119

Office: 206-236-1700 ext. 3
www.seabornpiledriving.com

Scope of Work: We propose to repair (1) mooring pile, repair (10) dock piles, drive (6) piles, permit (2) boat lifts, and construct a 139 sqft extension made of grated decking material.

County: King County
Location: Lake Washington

Applicant: Schoening Residence
2669 60th Ave SE
Mercer Island, WA 98040

Created: 01/15/22

Last Updated: 2/4/2022 12:25 PM Dray

Datum: CORPS OF ENGINEERS 1919
NE Quarter Of Section 11, Township 24, Range 04

Adjacent Owners:
TUTLAND ROBERT E
2701 60TH AVE SE 98040
CHAK CHEUNG
2457 60TH AVE SE 98040

SHEET 12.0

Appendix B:
Photos

Photo 1 - Existing dock from shore.

Photo 2 - Pilings to be repaired.

Photo 3 - Shoreline conditions to the north.

Photo 4 - Shoreline conditions to the south.