1 AREA PLAN - LOT COVERAGE
1" = 20'-0"

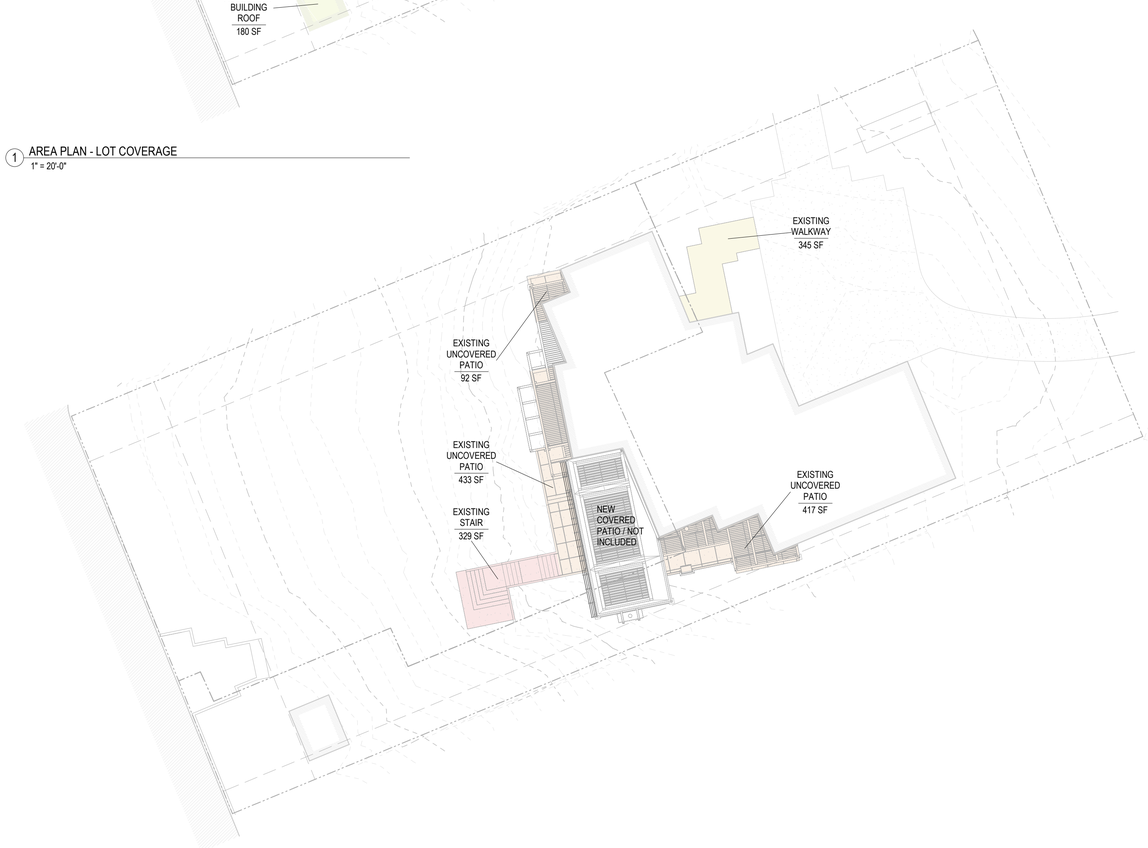

2 AREA PLAN - HARDSCAPE
1" = 20'-0"

ZONING INFORMATION

LOT SLOPE

HIGHEST ELEVATION POINT OF LOT	48'
LOWEST ELEVATION POINT OF LOT	20'
ELEVATION DIFFERENCE	28'
HORIZONTAL DISTANCE BETWEEN HIGH AND LOW POINTS	275'
LOT SLOPE	10%

LOT COVERAGE

A.	GROSS LOT AREA	33,140 SF
B.	NET LOT AREA	33,140 SF
C.	ALLOWED LOT COVERAGE AREA	13,256 SF
D.	ALLOWED LOT COVERAGE % OF LOT	40%
E.	EXISTING LOT COVERAGE	
1.	MAIN STRUCTURE ROOF AREA	5,301
2.	ACCESSORY BUILDING ROOF AREA	180 SF
3.	VEHICULAR USE (DRIVEWAY, PAVED ACCESS EASEMENTS [PORTION USED BY THE LOT FOR ACCESS], PARKING	3,230 SF
4.	COVERED PATIOS AND COVERED DECKS	0
5.	TOTAL EXISTING LOT COVERAGE AREA	8,720 SF
F.	(TOTAL LOT COVERAGE AREA REMOVED)	0
G.	PROPOSED ADJUSTMENT FOR SINGLE STORY	0
H.	PROPOSED ADJUSTMENT FOR FLAG LOT	0
I.	TOTAL NEW LOT COVERAGE AREA	
1.	MAIN STRUCTURE ROOF AREA	0
2.	ACCESSORY STRUCTURE ROOF AREA	0
3.	VEHICULAR USE	0
4.	COVERED PATIOS AND COVERED DECKS	909 SF
5.	TOTAL NEW LOT COVERAGE AREA	909 SF
J.	TOTAL PROJECT LOT COVERAGE AREA (E5 - F) + I5	9,623 SF
K.	PROPOSED LOT COVERAGE AREA (J / B)	29%

HARDSCAPE

A.	GROSS LOT AREA	33,140 SF
B.	NET LOT AREA	33,140 SF
C.	AREA BORROWED FROM LOT COVERAGE	3,633 SF
D.	ALLOWED HARDSCAPE AREA = 9% OF LOT AREA + C	2,982 SF
E.	ALLOWED HARDSCAPE AREA	6,615 SF
F.	TOTAL EXISTING HARDSCAPE AREA	
1.	UNCOVERED DECKS	0
2.	UNCOVERED PATIOS	942 SF
3.	WALKWAYS	345 SF
4.	STAIRS	329 SF
5.	ROCKERIES AND RETAINING WALLS	0
6.	OTHER	0
7.	TOTAL EXISTING HARDSCAPE AREA	1,616 SF
G.	(TOTAL HARDSCAPE AREA REMOVED)	0
H.	TOTAL NEW HARDSCAPE AREA	
1.	UNCOVERED DECKS	0
2.	UNCOVERED PATIOS	0
3.	WALKWAYS	0
4.	STAIRS	0
5.	ROCKERIES AND RETAINING WALLS	0
6.	OTHER	0
7.	TOTAL NEW HARDSCAPE AREA	0
I.	TOTAL PROJECT HARDSCAPE AREA = (F7 - G) + H7	1,616 SF
J.	TOTAL PROJECT HARDSCAPE AREA = (I / B)	5%

GROSS FLOOR AREA

BUILDING AREA	EXIST.	REM'D	NEW	TOTAL
UPPER FLOOR	1,720	0	0	1,720 SF
MAIN FLOOR	4,143	0	0	4,143 SF
GROSS BASEMENT AREA	0	0	0	0
GARAGE / CARPORT	1,170	0	0	1,170 SF
TOTAL FLOOR AREA	7,083	0	0	7,083 SF
ACCESSORY BUILDINGS	180	0	0	180 SF
ACCESSORY DWELLING UNIT	0	0	0	0
2ND / 3RD STORY ROOFED DECKS	0	0	0	0
BASEMENT AREA EXCLUDED	0	0	0	0
150% GFA MODIFIER	0	0	0	0
200% GFA MODIFIER	0	0	0	0
STAIRCASE GFA MODIFIER	0	0	0	0
TOTAL BUILDING AREA	7,213	0	0	7,213 SF

A.	LOT AREA	33,140 SF
B.	ZONE	R-15
C.	ALLOWED GFA	12,000 SF
D.	ALLOWED GFA AS % OF LOT	40
E.	PROPOSED GFA	7,213 SF
F.	PROPOSED GFA AS % OF LOT	22%

AVERAGE BUILDING ELEVATION

(40.7 x 27.6 + 41.3 x 27.6 + 41.6 x 14.0 + 41.8 x 12.0 + 41.7 x 7.7 + 41.7 x 18.9 + 42.8 x 32.8 + 43.7 x 35.4 + 41.6 x 54.7 + 41.5 x 12.0 + 41.5 x 12.0 + 41.5 x 4.6 + 41.5 x 18.0 + 41.5 x 25.2 + 40.0 x 12.4 + 40.0 x 28.5 + 40.2 x 3.5 + 40.1 x 17.8 + 42.0 x 8.5 + 42.0 x 7.0)
/ (27.6 + 27.6 + 14.0 + 12.0 + 7.7 + 18.9 + 32.8 + 35.4 + 54.7 + 12.0 + 12.0 + 4.6 + 18.0 + 25.2 + 12.4 + 28.5 + 3.5 + 17.8 + 8.5 + 7.0)

= 41.6'

BUILDING HEIGHT CALCULATIONS

A.	ALLOWABLE BUILDING HEIGHT (ABE + 30')	71.6'
B.	PROPOSED BUILDING HEIGHT	NO CHANGE
C.	BENCHMARK ELEVATION	44.4'
D.	BENCHMARK ELEVATION DESCRIPTION IRON PIPE AT INTERSECTION OF SE 32ND ST AND 60TH AVE SE	

SHORELINE DEVELOPMENT STANDARDS

SETBACK	25'
ALLOWED SHORELINE HARDSCAPE %	10%
ALLOWED SHORELINE HARDSCAPE AREA	3,000 SF
TOTAL EXISTING SHORELINE HARDSCAPE AREA	0
TOTAL NEW SHORELIN HARDSCAPE AREA	0

DRAWING INDEX

ARCHITECTURAL

A000	COVER SHEET
A101	SITE PLAN
A301	DEMO FLOOR PLAN - MAIN LEVEL
A302	DEMO FLOOR PLAN - TRELLIS LEVEL
A311	FLOOR PLAN - MAIN LEVEL
A312	FLOOR PLAN - TRELLIS LEVEL
A501	BUILDING SECTIONS

STRUCTURAL

S1.0	GENERAL STRUCTURAL NOTES
S2.0	FOUNDATION PLAN
S2.1	TRELLIS FRAMING PLAN
S3.0	STRUCTURAL DETAILS
S3.1	STRUCTURAL DETAILS

PROJECT INFORMATION

PROPERTY INFORMATION

STREET ADDRESS 5995 60TH AVE SE
MERCER ISLAND, WA 98040

PARCEL 217450-0100, 217450-0095
LOT CONSOLIDATION APPLICATION CURRENTLY UNDER REVIEW

LEGAL DESCRIPTION LOTS 1 AND 2, CITY OF MERCER ISLAND SHORT PLAT NUMBER MI-83-09-32, RECORDED UNDER RECORDING NUMBER 8430190O1, IN KING COUNTY, WASHINGTON, BEING A SHORT PLAT OF THE FOLLOWING: LOTS 19, 20, AND 22, BLOCK 1, EAST SEATTLE, ACCORDING TO THE PLAT THEREOF, RECORDED IN VOLUME 3 OF PLATS, PAGE 22, IN KING COUNTY, WASHINGTION; TOGETHER WITH VACATED 59TH AVE SOUTH ADJACENT; AND TOGETHER WITH SHORELANDS OF SECOND CLAS ABUTTING THEREON

LOT AREA

217450-0100	18,020 SF
217450-0095	15,120 SF
TOTAL	33,140

SCOPE OF WORK REPLACE EXISTING WOOD-FRAMED TRELLIS ON WEST SIDE OF EXISTING HOUSE WITH NEW STEEL-FRAMED TRELLIS AND LOW-SLOPE ROOF. NEW TRELLIS WILL OCCUPY APPROXIMATELY THE SAME FOOTPRINT AS EXISTING TRELLIS. 926 SF OF THE NEW STRUCTURE WILL BE LOW-SLOPE ROOF WITH OPERABLE LOUVER SYSTEM PANELS. THE REST WILL BE OPEN TRELLIS STRUCTURE. THERE WILL BE A 255 SF ADDITION TO THE SOUTH END OF THE EXISTING CONCRETE TERRACE. THIS WILL INCLUDE RETAINING WALLS AND A NEW OUTDOOR GAS FIREPLACE.

RELATED RECORDS SUB23-008
LOT CONSOLIDATION OF PARCELS 217450-0100 AND 217450-0095
SUBMITTAL 2023-12-13

ENVIRONMENTAL

DESIGNATIONS	SHORELINE, LANDSLIDE HAZARD, EROSION HAZARD, SEISMIC HAZARD
REVIEWS	CRITICAL AREA 2, CONCURRENT WITH BUILDING REVIEW
	SHORELINE: SEEKING EXEMPTION, CONCURRENT WITH BUILDING REVIEW
	SEPA: EXEMPT

CONTACTS

OWNER DOUGLAS AND DEBORAH ROSEN
5995 SE 30TH ST
MERCER ISLAND, WA 98040
(206) 382-6523

ARCHITECT NEIMAN TABER ARCHITECTS
1435 34TH AVE
SEATTLE, WA 98122
(206) 760-5550
CONTACT: DAVID TABER

STRUCTURAL ENGINEER HARRIOT VALENTINE ENGINEERS
1932 1ST AVE STE 720
SEATTLE, WA 98101
206 624-4760
CONTACT: JIM HARRIOT

GENERAL CONTRACTOR MIOVIC REINHARDT ASSOCIATES
1010 TURNER WAY E
SEATTLE, WA 98112
(206) 755-0336
CONTACT: J IRONS

NOTES + SYMBOLS

SYMBOLS

- WINDOW TAG
- DOOR TAG
- WALL/FLOOR/ROOF ASSEMBLY TYPE TAG
- RANGE HOOD
- DRYER VENT
- CARBON MONOXIDE
- SMOKE DETECTOR
- HEAT RECOVERY VENTILATION (HRV) - EXHAUST
- HEAT RECOVERY VENTILATION (HRV) - SUPPLY
- REVISION TAG
- BREAK LINE
- CENTER LINE
- 1/4" / 1'-0" DECK/ROOF SLOPE
- SLOPE CUT (RISE/RUN)
- EXHAUST PATH
- GRID LINE
- FLOOR LEVEL ELEV XXX'-X" DATUM
- NORTH ARROW
- SECTION
- DETAIL REFERENCE
- 100'-0" SPOT ELEVATION

NEIMAN TABER
ARCHITECTURE FOR THE NORTHWEST
1435 34th Ave
Seattle, WA 98122
www.neimantaber.com
206.760.5550

ROSEN TRELLIS REPLACEMENT

5995 60TH AVE SE
MERCER ISLAND, WA
98040

7236 REGISTERED ARCHITECT
DAVID NEIMAN
STATE OF WASHINGTON

No.	Date	Revision

Sheet Title
COVER SHEET

Date 2024-05-08

Sheet Number
A000

NEIMAN TABER
ARCHITECTURE FOR THE NORTHWEST
1435 34th Ave
Seattle, WA 98122
www.neimantaber.com
206.760.5550

TOTAL SIDE YARD WIDTH:
= LOT WIDTH x 17%
= 120' x 17%
= 20'-5"
= 13'-8" + 6'-9"

MINIMUM SINGLE SIDE YARD WIDTH:
= TOTAL WIDTH x 33%
= 6'-9"

1 SITE PLAN
1/16" = 1'-0"

ROSEN TRELLIS REPLACEMENT

5995 60TH AVE SE
MERCER ISLAND, WA
98040

10892
REGISTERED ARCHITECT
DAVID TABER
STATE OF WASHINGTON

No.	Date	Revision

Sheet Title
SITE PLAN

Date 2024-05-08

Sheet Number
A101

NEIMAN TABER
ARCHITECTURE FOR THE NORTHWEST
1435 34th Ave
Seattle, WA 98122
www.neimantaber.com
206.760.5550

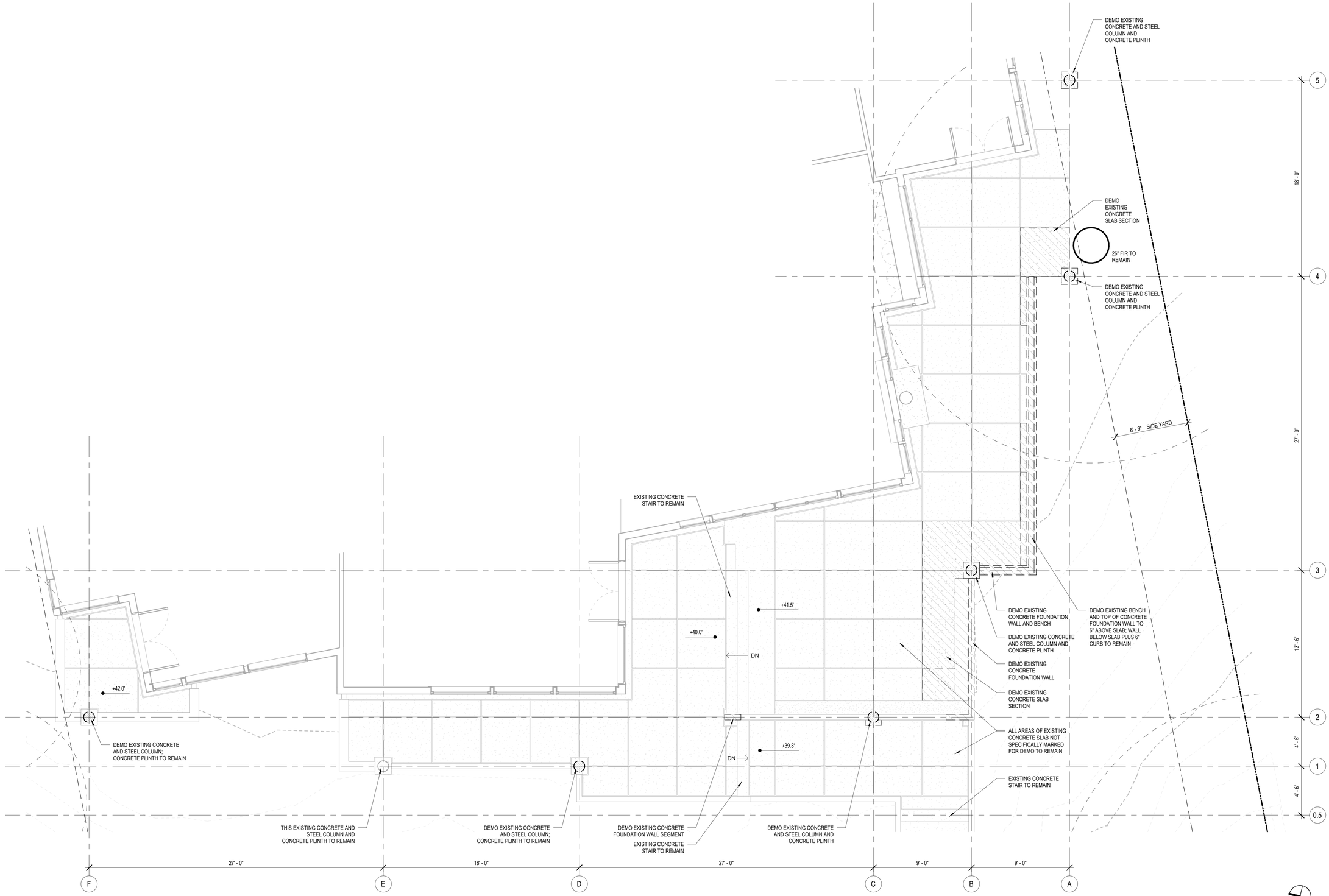

1 DEMO FLOOR PLAN - MAIN LEVEL
1/4" = 1'-0"

ROSEN TRELLIS REPLACEMENT

5995 60TH AVE SE
MERCER ISLAND, WA
98040

10892 REGISTERED ARCHITECT
DAVID TABER
STATE OF WASHINGTON

No.	Date	Revision

Sheet Title
DEMO FLOOR PLAN - MAIN LEVEL

Date 2024-05-08

Sheet Number
A301

NEIMAN TABER
ARCHITECTURE FOR THE NORTHWEST
1435 34th Ave
Seattle, WA 98122
www.neimantaber.com
206.760.5550

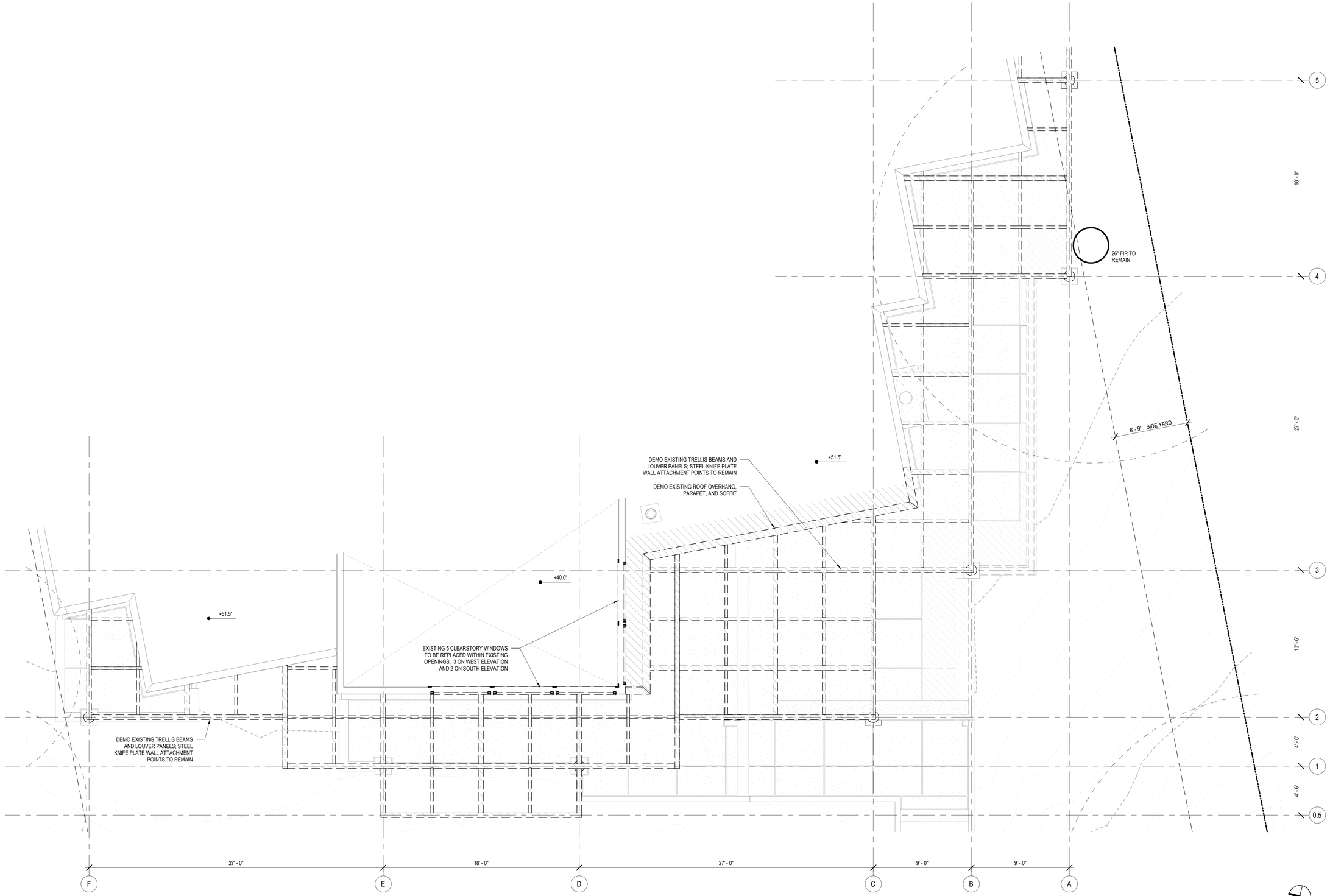

1 DEMO FLOOR PLAN - TRELLIS LEVEL
1/4" = 1'-0"

ROSEN TRELLIS REPLACEMENT

5995 60TH AVE SE
MERCER ISLAND, WA
98040

7236 REGISTERED ARCHITECT
DAVID NEIMAN
STATE OF WASHINGTON

No.	Date	Revision

Sheet Title
DEMO FLOOR PLAN - TRELLIS LEVEL

Date 2024-05-08

Sheet Number
A302

NEIMAN TABER
ARCHITECTURE FOR THE NORTHWEST
1435 34th Ave
Seattle, WA 98122
www.neimantaber.com
206.760.5550

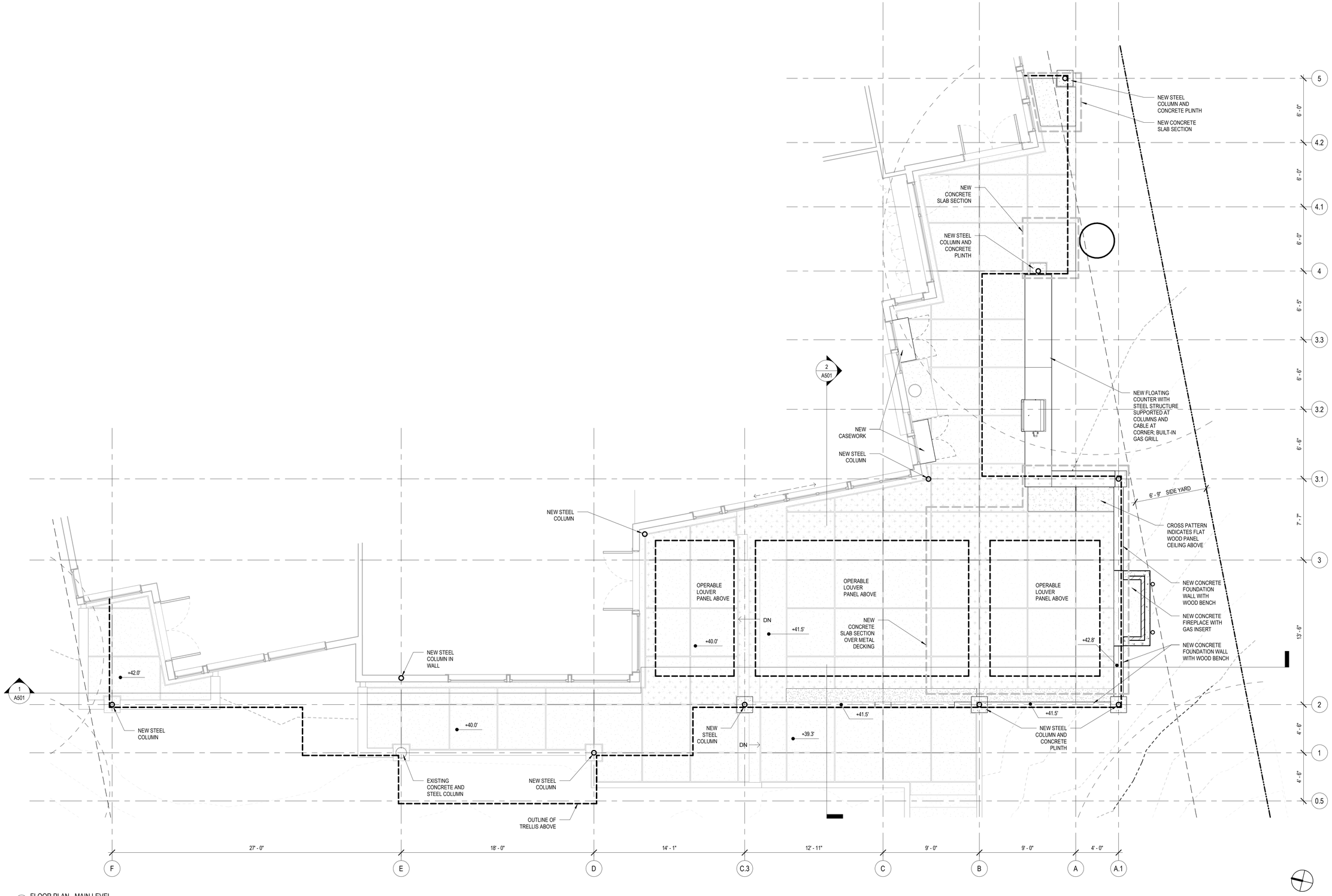

1 FLOOR PLAN - MAIN LEVEL
1/4" = 1'-0"

ROSEN TRELLIS REPLACEMENT

5995 60TH AVE SE
MERCER ISLAND, WA
98040

10892 REGISTERED ARCHITECT
DAVID TABER
STATE OF WASHINGTON

No.	Date	Revision

Sheet Title
FLOOR PLAN - MAIN LEVEL

Date 2024-05-08

Sheet Number
A311

NEIMAN TABER
ARCHITECTURE FOR THE NORTHWEST
1435 34th Ave
Seattle, WA 98122
www.neimantaber.com
206.760.5550

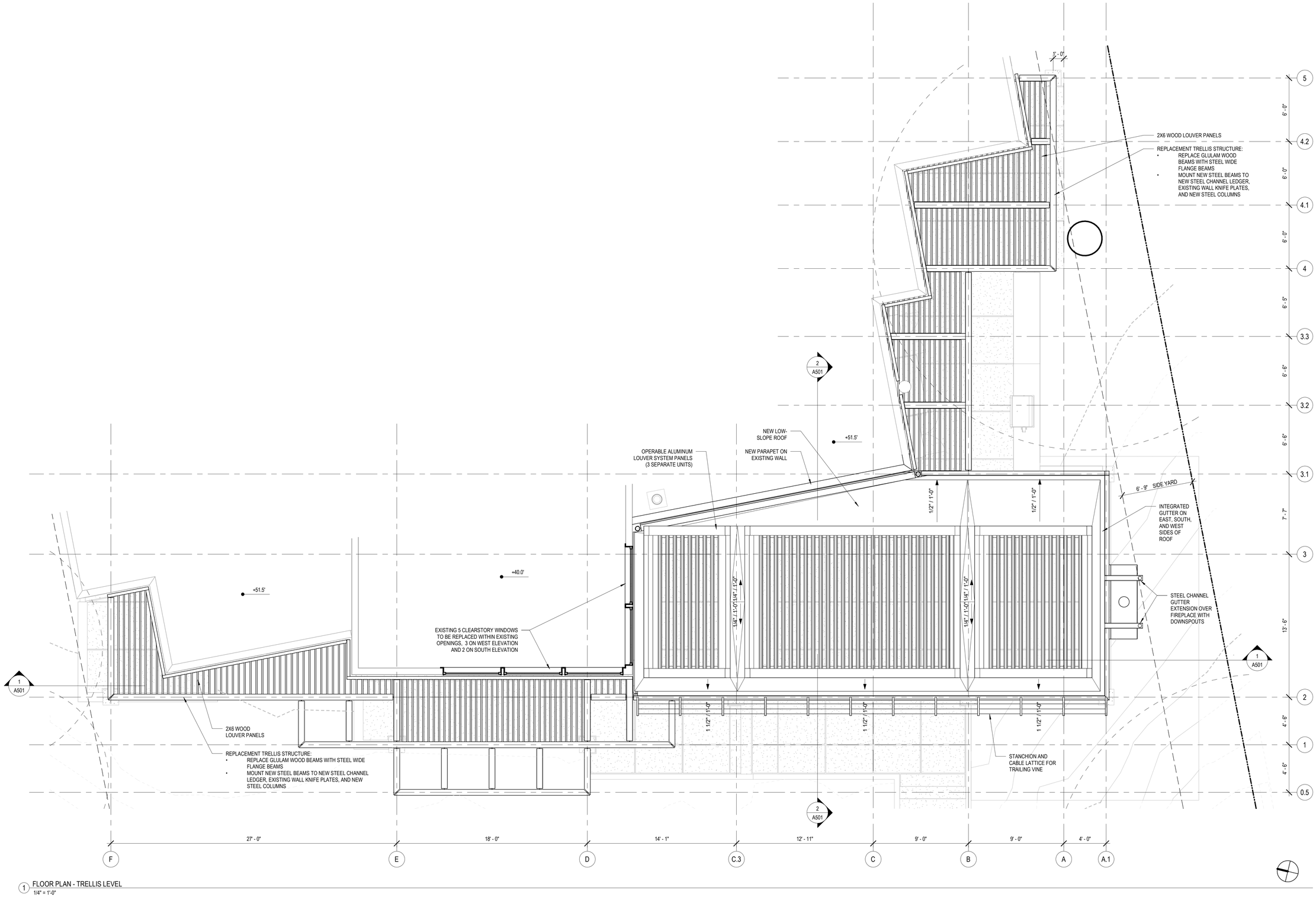

1 FLOOR PLAN - TRELLIS LEVEL
1/4" = 1'-0"

ROSEN TRELLIS REPLACEMENT

5995 60TH AVE SE
MERCER ISLAND, WA
98040

10892 REGISTERED ARCHITECT
DAVID TABER
STATE OF WASHINGTON

No.	Date	Revision

Sheet Title
FLOOR PLAN - TRELLIS LEVEL

Date 2024-05-08

Sheet Number
A312

NEIMAN TABER
ARCHITECTURE FOR THE NORTHWEST
1435 34th Ave
Seattle, WA 98122
www.neimantaber.com
206.760.5550

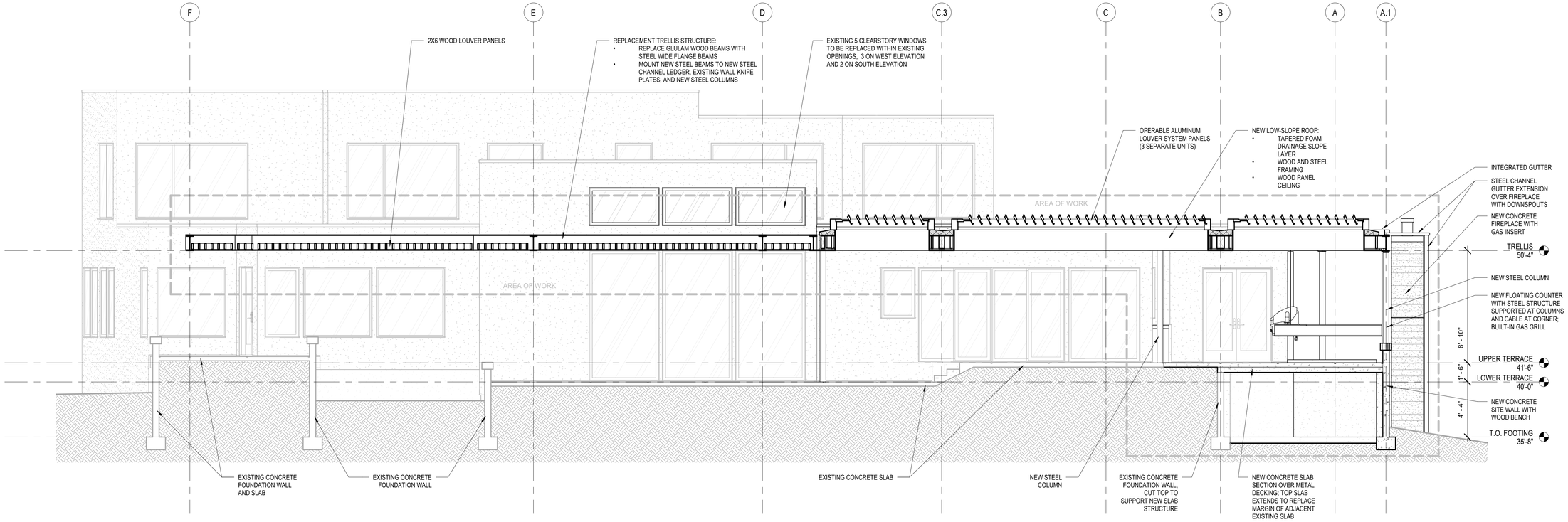

1 BUILDING SECTION - N-S
1/4" = 1'-0"

ROSEN TRELLIS REPLACEMENT

5995 60TH AVE SE
MERCER ISLAND, WA
98040

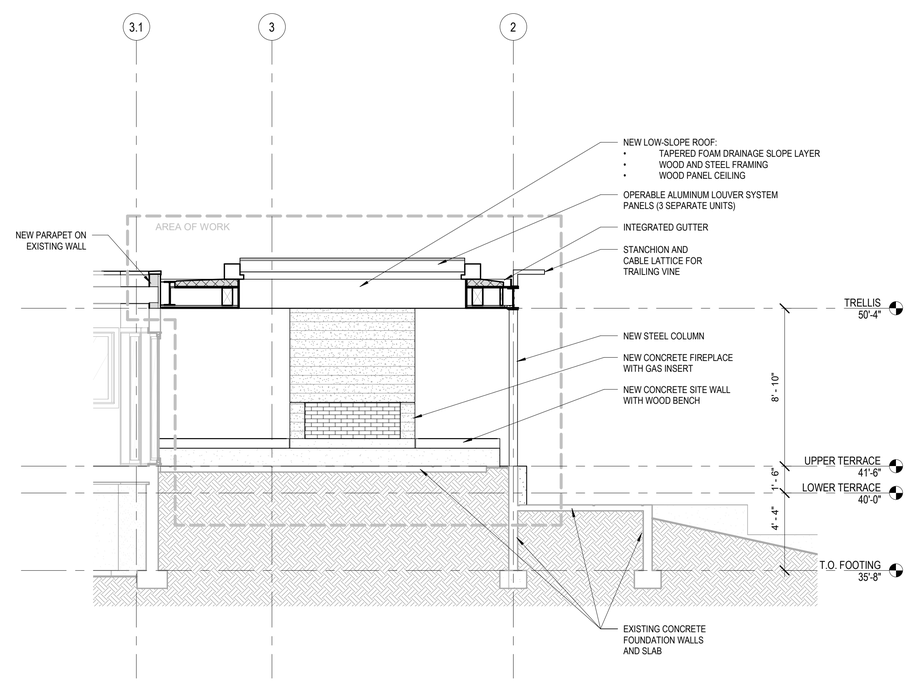

2 BUILDING SECTION - E-W
1/4" = 1'-0"

10892
REGISTERED ARCHITECT
DAVID TABER
STATE OF WASHINGTON

No.	Date	Revision

Sheet Title
BUILDING SECTIONS

Date 2024-05-08

Sheet Number
A501

GENERAL STRUCTURAL NOTES
(THE FOLLOWING APPLY UNLESS SHOWN OTHERWISE ON THE PLANS)

CRITERIA

1. ALL MATERIALS, WORKMANSHIP, DESIGN, AND CONSTRUCTION SHALL CONFORM TO THE DRAWINGS, SPECIFICATIONS, THE INTERNATIONAL BUILDING CODE (2018 EDITION), & LOCAL BUILDING CODE MODIFICATIONS TO THE INTERNATIONAL BUILDING CODE.

2. DESIGN LOADING CRITERIA:

FLOOR LIVE LOAD (RESIDENTIAL). . . . . 40 PSF
FLOOR LIVE LOAD (BALCONIES AND DECKS). . . . . 60 PSF
ROOF SNOW LOAD (Pf). . . . . 25 PSF

WIND:
BASIC WIND SPEED (3-SECOND GUST) . . . . 100 MPH
WIND IMPORTANCE FACTOR (Iw). 1.0
WIND EXPOSURE C
TOPOGRAPHICAL FACTOR (Kzt) 1.00

EARTHQUAKE:
LAT. / LONG. . . . . 47.583 / -122.252
SEISMIC IMPORTANCE FACTOR (Ie) 1.0
SEISMIC USE GROUP. I
MAPPED SPECTRAL RESPONSE (Ss/S1) 1.41g/0.49g
SPECTRAL RESPONSE COEF. (SDS/SD1). 1.13g/0.49g
SEISMIC FORCE RESISTING SYSTEM:. . . . . .STEEL ORDINARY
. . . . CANTILEVER COLUMN SYSTEMS
SEISMIC RESPONSE COEFICIENT (Cs) 0.91
SEISMIC DESIGN CATEGORY. D
RESPONSE MODIFICATION FACTOR (R) 1.25
ANALYSIS PROCEDURE . . . . .EQUIVALENT LATERAL FORCE

REFERENCE: OSHPD SEISMIC DESIGN TOOL

3. STRUCTURAL DRAWINGS SHALL BE USED IN CONJUNCTION WITH ARCHITECTURAL DRAWINGS FOR BIDDING AND CONSTRUCTION. CONTRACTOR SHALL VERIFY DIMENSIONS AND CONDITIONS FOR COMPATIBILITY AND SHALL NOTIFY ARCHITECT OF ANY DISCREPANCIES PRIOR TO CONSTRUCTION.

4. CONTRACTOR SHALL VERIFY ALL EXISTING DIMENSIONS, MEMBER SIZES, AND CONDITIONS PRIOR TO COMMENCING ANY WORK. ALL DIMENSIONS OF EXISTING CONSTRUCTION SHOWN ON THE DRAWINGS ARE INTENDED AS GUIDELINES ONLY AND MUST VERIFIED. CONTRACTOR SHALL DETERMINE THE LOCATION OF ALL ADJACENT UNDERGROUND UTILITIES PRIOR TO COMMENCING EXCAVATION. THE CONTRACTOR SHALL BRING ALL CONFLICTS AND DISCREPANICES TO THE ATTENTION OF THE ARCHITECT AND STRUCTURAL ENGINEER.

5. CONTRACTOR SHALL VERIFY ALL EXISTING CONDITIONS BEFORE COMMENCING ANY DEMOLITION. SHORING SHALL BE INSTALLED TO SUPPORT EXISTING CONSTRUCTION AS REQUIRED AND IN A MANNER SUITABLE TO THE WORK SEQUENCES. EXISTING REINFORCING SHALL BE RETAINED UNDAMAGED WHERE NOTED ON THE PLANS. DEMOLITION DEBRIS SHALL NOT BE ALLOWED TO DAMAGE OR OVERLOAD THE EXISTING STRUCTURE. LIMIT CONSTRUCTION LOADING (INCLUDING DEMOLITION DEBRIS) ON EXISTING FLOOR SYSTEMS TO 40 PSF. ALL NEW OPENINGS THROUGH EXISTING CONCRETE OR MASONRY WALLS, SLABS AND BEAMS SHALL BE ACCOMPLISHED BY SAW CUTTING WHEREVER POSSIBLE.

6. CONTRACTOR SHALL PROVIDE TEMPORARY BRACING FOR THE STRUCTURE AND STRUCTURAL COMPONENTS UNTIL ALL FINAL CONNECTIONS HAVE BEEN COMPLETED IN ACCORDANCE WITH THE PLANS.

7. CONTRACTOR SHALL BE RESPONSIBLE FOR ALL SAFETY PRECAUTIONS AND THE METHODS, TECHNIQUES, SEQUENCES OR PROCEDURES REQUIRED TO PERFORM THE WORK. THE STRUCTURAL ENGINEER HAS NO OVERALL SUPERVISORY AUTHORITY OR ACTUAL AND/OR DIRECT RESPONSIBILITY FOR THE SPECIFIC WORKING CONDITIONS AT THE SITE AND/OR FOR ANY HAZARDS RESULTING FROM THE ACTIONS OF ANY TRADE CONTRACTOR. THE STRUCTURAL ENGINEER HAS NO DUTY TO INSPECT, SUPERVISE, NOTE, CORRECT, OR REPORT ANY HEALTH OR SAFETY DEFICIENCIES OF THE OWNER, CONCONTRACTORS, OR OTHER ENTITIES OR PERSONS AT THE PROJECT SITE.

8. SPECIAL INSPECTION OF THE FOLLOWING TYPES OF CONSTRUCTION SHALL BE PROVIDED IN ACCORDANCE WITH SECTIONS 109 AND 1704 OF THE INTERNATIONAL BUILDING CODE AND THE PROJECT SPECIFICATIONS BY A QUALIFIED TESTING AGENCY DESIGNATED BY THE ARCHITECT, AND RETAINED BY THE BUILDING OWNER. THE ARCHITECT, STRUCTURAL ENGINEER, AND BUILDING DEPARTMENT SHALL BE FURNISHED WITH COPIES OF ALL INSPECTION AND TEST RESULTS.

A. STRUCTURAL STEEL FABRICATION AND ERECTION (INCLUDING FIELD WELDING AND HIGH-STRENGTH FIELD BOLTING)
B. METAL DECK INSTALLATION (INCLUDING FIELD WELDING)
C. EXPANSION BOLTS AND THREADED EXPANSION INSERTS
D. EPOXY GROUTED INSTALLATIONS

9. SHOP DRAWINGS FOR THE FOLLOWING ITEMS SHALL BE SUBMITTED TO THE ARCHITECT AND STRUCTURAL ENGINEER FOR REVIEW PRIOR TO FABRICATION OF THESE ITEMS.

A. STRUCTURAL STEEL
B. METAL DECKING

APPROVED SETS OF ALL SHOP DRAWINGS SHALL ALSO BE SUBMITTED TO THE BUILDING DEPARTMENT.

GEOTECHNICAL

10. FOUNDATION NOTES: SUBGRADE PREPARATION INCLUDING DRAINAGE, EXCAVATION, COMPACTION, AND FILLING REQUIREMENTS, SHALL CONFORM STRICTLY WITH RECOMMENDATIONS GIVEN IN THE SOILS REPORT OR AS DIRECTED BY THE SOILS ENGINEER. FOOTINGS SHALL BEAR ON SOLID UNDISTURBED EARTH (CONTROLLED, COMPACTED STRUCTURAL FILL OR BOTH) AT LEAST 18" BELOW LOWEST ADJACENT FINISHED GRADE. FOOTING DEPTHS/ELEVATIONS SHOWN ON PLANS (OR IN DETAILS) ARE MINIMUM AND FOR GUIDANCE ONLY; THE ACTUAL ELEVATIONS OF FOOTINGS MUST BE ESTABLISHED BY THE CONTRACTOR IN THE FIELD WORKING WITH THE TESTING LAB AND SOILS ENGINEER. BACKFILL BEHIND ALL RETAINING WALLS WITH FREE DRAINING GRANULAR FILL AND PROVIDE FOR SUBSURFACE DRAINAGE AS NOTED IN THE SOILS REPORT.

ALLOWABLE SOIL PRESSURE. . . . . 3500 PSF
LATERAL EARTH PRESSURE . . . . 35 PCF

SOILS REPORT REFERENCE: GEOTECH CONSULTANTS NO. JN23390

CONCRETE

11. CONCRETE SHALL BE MIXED, PROPORTIONED, CONVEYED AND PLACED IN ACCORDANCE WITH IBC SECTION 1905 AND ACI 301. CONCRETE SHALL ATTAIN A 28-DAY STRENGTH OF F'C = 2,500 PSI. THE CONCRETE MIX SHALL CONTAIN A MAXIMUM OF 330 POUNDS OF CEMENT PER CUBIC YARD AND SHALL HAVE A HIGH (30 PERCENT OR MORE) SCM (SUPPLEMENTARY CEMENTITIOUS MATERIALS, SUCH AS FLYASH OR SLAG) CONTENT. CEMENT SHALL BE A BLENDED HYDRAULIC CEMENT CONFORMING TO ASTM C595.

A CONCRETE PERFORMANCE MIX SHALL BE SUBMITTED TO THE ARCHITECT, STRUCTURAL ENGINEER AND THE BUILDING DEPARTMENT FOR APPROVAL TWO WEEKS PRIOR TO PLACING ANY CONCRETE. THE CONCRETE PERFORMANCE MIX SHALL INCLUDE THE AMOUNTS OF CEMENT, SUPPLEMENTARY CEMENTITIOUS MATERALS, FINE AND COARSE AGGREGATE, WATER AND ADMIXTURES AS WELL AS THE WATER CEMENT RATIO, SLUMP, CONCRETE YIELD & SUBSTANTIATING STRENGTH DATA IN ACCORDANCE WITH ARTICLE 4.2.3 OF ACI 301. REVIEW OF MIX SUBMITTALS BY THE ENGINEER OF RECORD INDICATES ONLY THAT INFORMATION PRESENTED CONFORMS GENERALLY WITH CONTRACT DOCUMENTS. CONTRACTOR OR SUPPLIER MAINTAINS FULL RESPONSIBILITY FOR SPECIFIED PERFORMANCE.

ALL CONCRETE WITH SURFACES EXPOSED TO STANDING WATER SHALL BE AIR-ENTRAINED WITH AN AIR-ENTRAINING AGENT CONFORMING TO ASTM C260, C494, AND C618. TOTAL AIR CONTENT SHALL BE IN ACCORDANCE WITH TABLE 19.3.2.1 OF THE ACI 318.

12. REINFORCING STEEL SHALL CONFORM TO ASTM A615 (INCLUDING SUPPLEMENT S1), GRADE 60, FY = 60,000 PSI. WELDED WIRE FABRIC SHALL CONFORM TO ASTM A-185.

13. REINFORCING STEEL SHALL BE DETAILED (INCLUDING HOOKS AND BENDS) IN ACCORDANCE WITH ACI 318. LAP ALL CONTINUOUS REINFORCEMENT 40 BAR DIAMETERS OR 2'-0" MINIMUM. PROVIDE CORNER BARS AT ALL WALL AND FOOTING INTERSECTIONS. LAP CORNER BARS 40 BAR DIAMETERS OR 2'-0" MINIMUM. LAP ADJACENT MATS OF WELDED WIRE FABRIC A MINIMUM OF 8" AT SIDES AND ENDS.

14. CONCRETE PROTECTION (COVER) FOR REINFORCING STEEL SHALL BE AS FOLLOWS:
A. FOOTINGS AND OTHER UNFORMED SURFACES, EARTH FACE . . .3"
B. ALL OTHER SURFACES . . . . .1 1/2"

15. NON-SHRINK GROUT SHALL BE FURNISHED BY AN APPROVED MANUFACTURER AND SHALL BE MIXED AND PLACED IN STRICT ACCORDANCE WITH THE MANUFACTURER'S PUBLISHED RECOMMENDATIONS. GROUT STRENGTH SHALL BE AT LEAST EQUAL TO THE MATERIAL ON WHICH IT IS PLACED (3000 PSI MINIMUM).

ANCHORAGE

16. EXPANSION BOLTS INTO CONCRETE AND GROUTED MASONRY UNITS SHALL BE "STRONG-BOLT" ANCHORS AS MANUFACTURED BY THE SIMPSON COMPANY AND INSTALLED IN STRICT ACCORDANCE WITH ICC ESR 1771, INCLUDING MINIMUM EMBEDMENT REQUIREMENTS.

17. EPOXY-GROUTED ITEMS SPECIFIED ON THE DRAWINGS SHALL BE GROUTED WITH "SET-XP" HIGH STRENGTH EPOXY AS MANUFACTURED BY THE SIMPSON COMPANY AND INSTALLED IN STRICT ACCORDANCE WITH ICC ESR 2508.

18. TITEN HD ANCHORS SPECIFIED ON THE DRAWINGS SHALL CONSIST OF "TITEN HD" HEAVY DUTY SCREW ANCHORS AS MANUFACTURED BY THE SIMPSON COMPANY AND INSTALLED IN STRICT ACCORDANCE WITH ICC ESR 2713.

STEEL

19. STRUCTURAL STEEL DESIGN, FABRICATION, AND ERECTION SHALL BE BASED ON THE LATEST EDITIONS OF THE AISC SPECIFICATIONS AND CODES:

A. SPECIFICATION FOR STRUCTURAL STEEL BUILDINGS (AISC 360)

B. CODE OF STANDARD PRACTICE FOR STEEL BUILDINGS AND BRIDGES (AISC 303)

C. SPECIFICATION FOR STRUCTURAL JOINTS USING ASTM A325 OR A490 BOLTS. BOLTS IN SHEAR OR BEARING TYPE CONNECTIONS NEED ONLY BE TIGHTENED TO THE SNUG TIGHT CONDITION PER SECTION 8(C).

20. STRUCTURAL STEEL SHALL CONFORM TO THE FOLLOWING MINIMUM STANDARDS. PLATES, ANGLES, AND CHANNELS SHALL CONFORM TO ASTM A36, FY = 36 KSI. WIDE FLANGE SHAPES SHALL CONFORM TO ASTM A992, FY = 50 KSI. STEEL PIPE SHALL CONFORM TO ASTM A53, TYPE E OR S, GRADE B, FY = 35 KSI. SQUARE OR RECTANGULAR STRUCTURAL TUBING SHALL CONFORM TO ASTM A500, GRADE B, FY = 46 KSI. ANCHOR BOLTS AND CONNECTION BOLTS SHALL CONFORM TO ASTM A307. THREADED ROD AND STUDS SHALL CONFORM TO ASTM A36.

21. ALL WELDING SHALL BE IN CONFORMANCE WITH AISC AND AWS STANDARDS AND SHALL BE PERFORMED BY WABO CERTIFIED WELDERS USING E70XX ELECTRODES. ONLY PREQUALIFIED WELDS (AS DEFINED BY AWS) SHALL BE USED.

WOOD

22. FRAMING LUMBER SHALL BE KILN DRIED OR MC-15, AND GRADED AND MARKED IN CONFORMANCE WITH WCLIB STANDARD GRADING RULES FOR WEST COAST LUMBER NO. 17, LATEST EDITION. FURNISH TO THE FOLLOWING MINIMUM STANDARDS:

JOISTS: (2X MEMBERS)	HEM-FIR NO. 2 MINIMUM BASE VALUE, FB = 850 PSI
(3X & 4X MEMBERS)	DOUGLAS FIR NO. 1 MINIMUM BASE VALUE, FB = 1000 PSI
STRUCTURAL LIGHT FRAMING: (INCL. 3X AND 4X POSTS)	DOUGLAS FIR NO. 2 MINIMUM BASE VALUE, FB = 900 PSI
BEAMS AND STRINGERS: (INCL. 6X AND LARGER)	DOUGLAS FIR NO. 1 MINIMUM BASE VALUE, FB = 1350 PSI
POSTS AND TIMBERS: (6X6 AND LARGER)	DOUGLAS FIR NO. 1 MINIMUM BASE VALUE, FC = 1000 PSI
STUDS, PLATES & MISC. FRAMING:	DOUGLAS FIR OR HEM-FIR STANDARD GRADE
2X6 STUDS AND PLATES:	HEM-FIR NO.3/ STUD GRADE
2X AND 3X T & G DECKING	HEM-FIR COMMERICAL DEX, MINIMUM BASE VALUE, FB = 1350 PSI

23. ENGINEERED LUMBER MEMBERS SHALL BE MANUFACTURED UNDER A PROCESS BY THE NATIONAL RESEARCH BOARD. EACH PIECE SHALL BEAR A STAMP OR STAMPS NOTING THE NAME AND PLANT NUMBER OF THE MANUFACTURER, THE GRADE, THE NATIONAL RESEARCH BOARD NUMBER, AND THE QUALITY CONTROL AGENCY. ALL LUMBER SHALL BE MANUFACTURED IN ACCORDANCE WITH THE APPROPRIATE NER REPORT AND GLUED WITH A WATERPROOF ADHESIVE MEETING THE REQUIREMENTS OF ASTM D2559 WITH ALL GRAIN PARALLEL WITH THE LENGTH OF THE MEMBER.

PSL	FB = 2900 PSI	E = 2000 KSI	FV = 290 PSI	NER-292
LSL	FB = 2250 PSI	E = 1500 KSI	FV = 285 PSI	NER-481
LVL	FB = 2600 PSI	E = 1800 KSI	FV = 285 PSI	NER-126

DESIGN SHOWN ON PLANS IS BASED ON LUMBER MANUFACTURED BY THE WEYERHAUSER CORPORATION. ALTERNATE MANUFACTURERS MAY BE USED SUBJECT TO REVIEW AND APPROVAL BY THE ARCHITECT AND STRUCTURAL ENGINEER. ALTERNATE JOIST HANGERS AND OTHER HARDWARE MAY BE SUBSTITUTED FOR ITEMS SHOWN PROVIDED THEY HAVE ICC APPROVAL FOR EQUAL OR GREATER LOAD CAPACITIES. ALL JOIST HANGERS AND OTHER HARDWARE SHALL BE COMPATIBLE IN SIZE WITH MEMBERS PROVIDED.

ALL PROPOSED HOLE SIZES AND LOCATIONS SHALL BE SUBMITTED TO THE STRUCTURAL ENGINEER FOR APPROVAL TWO WORKING DAYS PRIOR TO DRILLING HOLES.

24. PLYWOOD SHEATHING SHALL BE GRADE C-D, EXTERIOR GLUE OR STRUCTURAL II, EXTERIOR GLUE IN CONFORMANCE WITH APA STANDARDS. ORIENTED STRAND BOARD OF EQUIVALENT THICKNESS, EXPOSURE RATING AND SPAN RATING MAY BE USED IN LIEU OF PLYWOOD.

A. ROOF SHEATHING SHALL BE 1/2" (NOM.) WITH SPAN RATING 24/0.
B. FLOOR SHEATHING SHALL BE 3/4" (NOM.) WITH SPAN RATING 40/20.
C. WALL SHEATHING SHALL BE 1/2" (NOM.) WITH SPAN RATING 24/0.

REFER TO WOOD FRAMING NOTES BELOW FOR TYPICAL NAILING.

25. ALL WOOD IN DIRECT CONTACT WITH CONCRETE OR MASONRY SHALL BE PRESSURE-TREATED WITH AN APPROVED PRESERVATIVE OR (2) LAYERS OF ASPHALT IMPREGNATED BUILDING PAPER SHALL BE PROVIDED BETWEEN UNTREATED WOOD AND CONCRETE OR MASONRY. ALL WOOD EXPOSED TO WEATHER WITHOUT THE ADEQUATE PROTECTION OF A ROOF OR EAVE SHALL BE AN APPROVED WOOD OF NATURAL RESISTANCE TO DECAY OR PRESSURE TREATED. SUCH MEMBERS INCLUDE HORIZONTAL MEMBERS SUCH AS GIRDERS, JOISTS, AND DECKING; OR VERTICAL MEMBERS SUCH AS POSTS, POLES, AND COLUMNS.

26. TIMBER CONNECTORS CALLED OUT BY LETTERS AND NUMBERS SHALL BE "STRONG-TIE" BY SIMPSON COMPANY, AS SPECIFIED IN THEIR MOST RECENT CATALOG. EQUIVALENT DEVICES BY OTHER MANUFACTURERS MAY BE SUBSTITUTED, PROVIDED THEY HAVE ICC APPROVAL FOR EQUAL OR GREATER LOAD CAPACITIES. PROVIDE NUMBER AND SIZE OF FASTENERS AS SPECIFIED BY MANUFACTURER. CONNECTORS SHALL BE INSTALLED IN ACCORDANCE WITH THE MANUFACTURER'S RECOMMENDATIONS. WHERE CONNECTOR STRAPS CONNECT TWO MEMBERS, PLACE ONE-HALF OF THE NAILS OR BOLTS IN EACH MEMBER. ALL BOLTS IN WOOD MEMBERS SHALL CONFORM TO ASTM A307. PROVIDE WASHERS UNDER THE HEADS AND NUTS OF ALL BOLTS AND LAG SCREWS BEARING ON WOOD. UNLESS NOTED OTHERWISE, ALL NAILS SHALL BE COMMON. ALL SHIMS SHALL BE SEASONED AND DRIED AND THE SAME GRADE (MINIMUM) AS MEMBERS CONNECTED. HANGERS IN DIRECT CONTACT WITH PRESERVATIVE-TREATED WOOD SHALL BE EITHER STAINLESS STEEL (SST300), POST HOT-DIPPED GALVANIZED(HDG) OR GALVANIZED WITH A MINIMUM OF 1.85OZ ZINC PER SQUARE INCH (ZMAX). UNLESS NOTED OTHERWISE, ALL LUMBER JOISTS SHALL BE CONNECTED TO FLUSH BEAMS WITH "LUS" SERIES JOIST HANGERS, AND ALL TJI JOISTS SHALL BE CONNECTED TO FLUSH BEAMS WITH "ITT" OR "IUT" SERIES JOIST HANGERS.

27. NAILS - NAIL SIZES SPECIFIED ON DRAWINGS ARE BASED ON THE FOLLOWING SPECIFICATIONS:

SIZE	LENGTH	DIAMETER
6D	2"	0.113"
8D	2-1/2"	0.131"
10D	3"	0.148"
12D	3-1/4"	0.148"
16D	3-1/2"	0.162"

IF CONTRACTOR PROPOSES THE USE OF ALTERNATE NAILS, THEY SHALL SUBMIT NAIL SPECIFICATIONS TO THE STRUCTURAL ENGINEER (PRIOR TO CONSTRUCTION) FOR REVIEW AND APPROVAL. NAILS SHALL BE DRIVEN FLUSH TO FACE OF SHEATHING WITH NO COUNTERSINKING PERMITTED.

28. WOOD FRAMING NOTES--THE FOLLOWING APPLY UNLESS OTHERWISE SHOWN:

A. ALL WOOD FRAMING DETAILS NOT SHOWN OTHERWISE SHALL BE CONSTRUCTED TO THE MINIMUM STANDARDS OF THE INTERNATIONAL BUILDING CODE. MINIMUM NAILING, UNLESS OTHERWISE NOTED, SHALL CONFORM TO TABLE 2304.10.1 OF THE INTERNATIONAL BUILDING CODE. UNLESS NOTED OTHERWISE, ALL NAILS SHALL BE COMMON. COORDINATE THE SIZE AND LOCATION OF ALL OPENINGS WITH MECHANICAL AND ARCHITECTURAL DRAWINGS. PROVIDE WASHERS UNDER THE HEADS AND NUTS OF ALL BOLTS AND LAG SCREWS BEARING ON WOOD.

B. WALL FRAMING: ALL STUD WALLS SHOWN AND NOT OTHERWISE NOTED SHALL BE 2X4 STUDS @ 16" O.C. AT INTERIOR WALLS AND 2X6 @ 16" O.C. AT EXTERIOR WALLS. TWO STUDS MINIMUM SHALL BE PROVIDED AT THE END OF ALL WALLS AND AT EACH SIDE OF ALL OPENINGS. TWO 2X8 HEADERS SHALL BE PROVIDED OVER ALL OPENINGS NOT OTHERWISE NOTED. SOLID BLOCKING FOR WOOD COLUMNS SHALL BE PROVIDED THROUGH FLOORS TO SUPPORTS BELOW. WALLS SHALL HAVE A SINGLE BOTTOM PLATE AND A DOUBLE TOP PLATE. END NAIL TOP PLATE TO EACH STUD WITH TWO 16D NAILS, AND TOENAIL OR END NAIL EACH STUD TO BOTTOM PLATE WITH TWO 16D NAILS. FACE NAIL DOUBLE TOP PLATE WITH 16D AT 12" O.C. AND LAP MINIMUM 4'-0" AT JOINTS AND PROVIDE SIX 16D NAILS AT 4" O.C. EACH SIDE OF JOINT. ALL STUD WALLS SHALL HAVE THEIR LOWER WOOD PLATES ATTACHED TO WOOD FRAMING BELOW WITH 16D NAILS AT 12" O.C. STAGGERED OR BOLTED TO CONCRETE WITH 5/8" DIAMETER ANCHOR BOLTS (WITH 7" MINIMUM EMBEDMENT)@ 4'-0" O.C. UNLESS INDICATED OTHERWISE. INDIVIDUAL MEMBERS OF BUILT-UP POSTS SHALL BE NAILED TO EACH OTHER WITH 16D @ 12" O.C. STAGGERED. REFER TO THE PLANS AND SHEAR WALL SCHEDULE FOR REQUIRED SHEATHING AND NAILING. WHEN NOT OTHERWISE NOTED, PROVIDE GYPSUM WALLBOARD ON INTERIOR SURFACES NAILED TO ALL STUDS, TOP AND BOTTOM PLATES AND BLOCKING WITH NAILS AT 7" O.C. USE 5D COOLER NAILS FOR 1/2" GWB AND 6D COOLER NAILS FOR 5/8" GWB. WHEN NOT OTHERWISE NOTED, PROVIDE 1/2" (NOM.) APA RATED SHEATHING (SPAN RATING 24/0) ON EXTERIOR SURFACES NAILED AT ALL PANEL EDGES (BLOCK UNSUPPORTED EDGES), TOP AND BOTTOM PLATES WITH 8D @ 6" O.C. AND TO ALL INTERMEDIATE STUDS AND BLOCKING WITH 8D @ 12" O.C. ALLOW 1/8" SPACING AT ALL PANEL EDGES AND ENDS.

C. FLOOR AND ROOF FRAMING: PROVIDE DOUBLE JOISTS AROUND ALL OPENINGS IN FLOORS OR ROOFS UNLESS OTHERWISE NOTED. PROVIDE SOLID BLOCKING AT ALL BEARING POINTS. TOENAIL JOISTS TO SUPPORTS WITH TWO 16D NAILS. ATTACH TIMBER JOISTS TO FLUSH HEADERS OR BEAMS WITH METAL JOIST HANGERS IN ACCORDANCE WITH TIMBER CONNECTOR NOTE. NAIL ALL MULTI-JOIST BEAMS TOGETHER WITH 16D @ 12" O.C. STAGGERED. UNLESS OTHERWISE NOTED ON THE PLANS, ROOF AND FLOOR SHEATHING SHALL BE LAID UP WITH STRENGTH AXIS PERPENDICULAR TO SUPPORTS AND NAILED WITH 8D NAILS @ 6" O.C. TO FRAMED PANEL EDGES AND OVER STUD WALLS AS SHOWN ON PLANS AND @ 12" O.C. TO INTERMEDIATE SUPPORTS. PROVIDE APPROVED PLYWOOD EDGE CLIPS CENTERED BETWEEN JOISTS/TRUSSES AT UNBLOCKED ROOF SHEATHING EDGES. ALL FLOOR SHEATHING EDGES SHALL HAVE APPROVED TONGUE-AND-GROOVE JOINTS OR SHALL BE SUPPORTED WITH SOLID BLOCKING. ALLOW 1/8" SPACING AT ALL PANEL EDGES AND ENDS OF ALL ROOF AND FLOOR SHEATHING. TOENAIL BLOCKING TO SUPPORTS WITH 16D @ 12" O.C. UNLESS OTHERWISE NOTED. AT BLOCKED FLOOR AND ROOF DIAPHRAGMS PROVIDE FLAT 2X BLOCKING AT ALL UNFRAMED PLYWOOD PANEL EDGES AND NAIL WITH EDGE NAILING SPECIFIED.

HV
Harriott Valentine Engineers Inc.
1932 First Avenue, Suite 720
Seattle, Washington 98101-2447
tel 206 624 4760 fax 206 447 6971
www.harriottvalentine.com

JAMES A HARRIOTT
STATE OF WASHINGTON
29049
STRUCTURAL ENGINEER
PROFESSIONAL ENGINEER
5/6/24

Project Contact
Kevin Tsuchida
tel 206 624 4760
fax 206 447 6971
ktsuchida@harriottvalentine.com

Project Architect
Neiman Taber
1435 34th Ave
Seattle, WA 98122

Project
Rosen Trellis
3009 60th Ave SE
Mercer Island, WA 98040

Issue Date	Issue Description
05/06/24	Permit Set

Building Department Approval

Drawing Title
GENERAL STRUCTURAL NOTES

Drawing Number
S1.0

ROSEN TRELLIS

FOUNDATION PLAN NOTES

1. WHERE NEW CONCRETE WALLS OR FOOTING ABUT EX. CONCRETE, PROVIDE DOWELS #4 x 2'-0" TO MATCH HORIZ. REINFORCING, EMBED 5" IN EPOXY GROUT.

NOTE!! EXISTING FRAMING MEMBERS AS INDICATED ON THIS PLAN ARE ASSUMED FOR DESIGN PURPOSES ONLY. HARRIOTT VALENTINE ENGINEERS SHALL NOT BE HELD LIABLE FOR LOCATION/ SIZE OF EXISTING MEMBERS AS CALLED ON THIS PLAN. EXISTING MEMBERS SHALL BE VERIFIED AND REPORTED TO STRUCTURAL ENGINEER OF RECORD PRIOR TO CONSTRUCTION.

LEGEND

- SPAN
- EXTENT
- X / SX.X — SECTION DETAIL
- COLUMN ABOVE
- NEW CONCRETE WALL
- EXISTING CONCRETE WALL

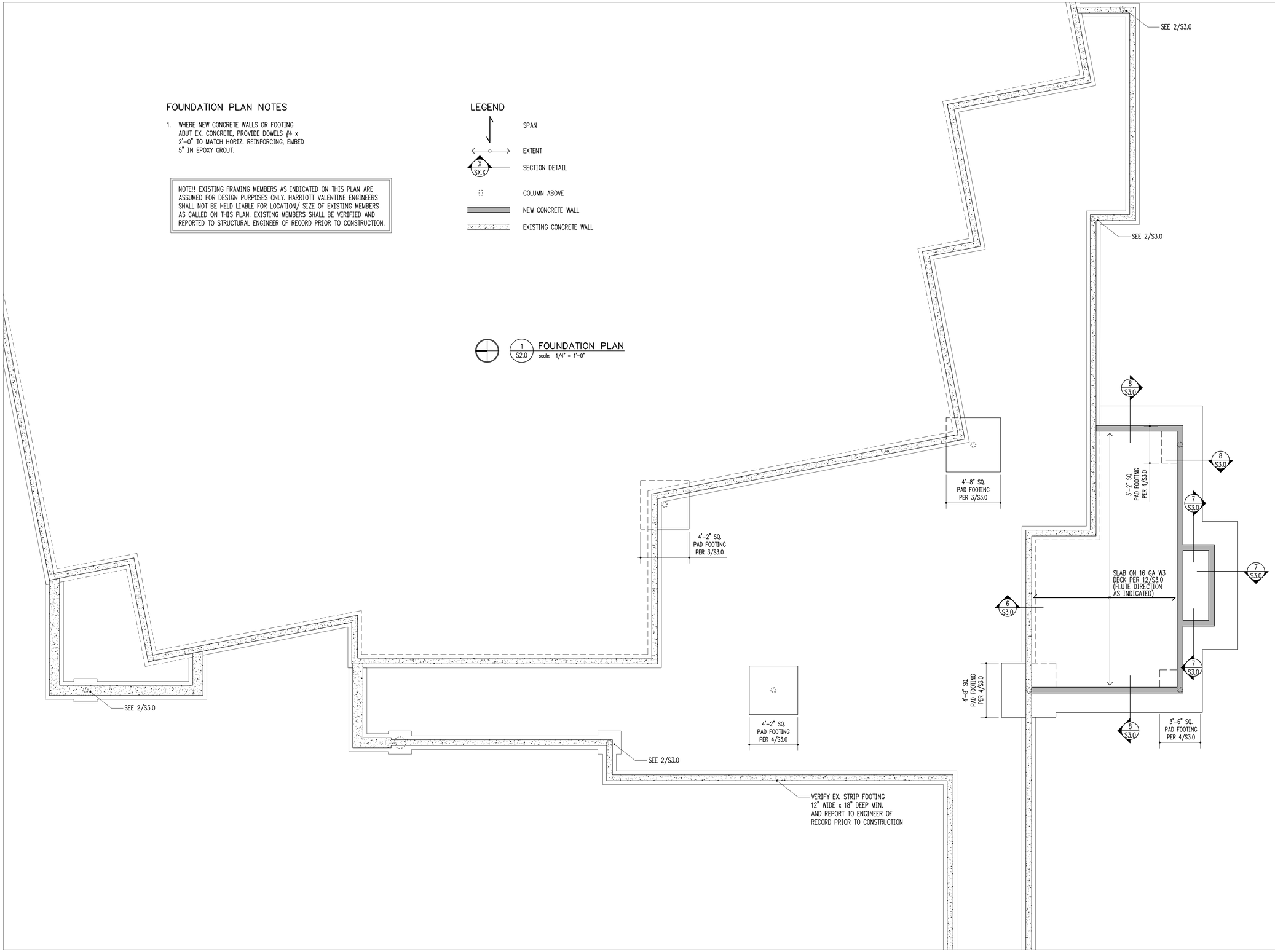

1 / S2.0 **FOUNDATION PLAN**
scale: 1/4" = 1'-0"

HV

Harriott Valentine Engineers Inc.
1932 First Avenue, Suite 720
Seattle, Washington 98101-2447
tel 206 624 4760 fax 206 447 6971
www.harriottvalentine.com

JAMES A. HARRIOTT — STATE OF WASHINGTON — 22019 — STRUCTURAL ENGINEER — PROFESSIONAL ENGINEER
5/6/24

Project Contact
Kevin Tsuchida
tel 206 624 4760
fax 206 447 6971
ktsuchida@harriottvalentine.com

Project Architect
Neiman Taber
1435 34th Ave
Seattle, WA 98122

Project
Rosen Trellis
3009 60th Ave SE
Mercer Island, WA 98040

Issue Date	Issue Description
05/06/24	Permit Set

Building Department Approval

Drawing Title
FOUNDATION PLAN

Drawing Number
S2.0

ROSEN TRELLIS

FRAMING PLAN NOTES

1. REFER TO GENERAL STRUCTURAL NOTES FOR FLOOR OR ROOF SHEATHING TYPE, THICKNESS, AND NAILING.

NOTE!! EXISTING FRAMING MEMBERS AS INDICATED ON THIS PLAN ARE ASSUMED FOR DESIGN PURPOSES ONLY. HARRIOTT VALENTINE ENGINEERS SHALL NOT BE HELD LIABLE FOR LOCATION/ SIZE OF EXISTING MEMBERS AS CALLED ON THIS PLAN. EXISTING MEMBERS SHALL BE VERIFIED AND REPORTED TO STRUCTURAL ENGINEER OF RECORD PRIOR TO CONSTRUCTION.

HANGER SCHEDULE

MEMBER	HANGER	FACE NAILING	CAPACITY (Cd = 1.0)
2x6	LUS26	10d COMMON	850 lb
LVL 1 3/4x11 7/8	MIU1.81/11	16d COMMON	2475 lb
PSL 3 1/2x11 7/8	HHUS410	16d COMMON	4845 lb
PSL 5 1/4x11 7/8	MGU5.50-SDS	1/4 x 2 1/2 SDS	6805 lb
PSL 7x11 7/8	HGUS7.25/12	16d COMMON	10280 lb

LEGEND

- SPAN
- EXTENT
- SECTION DETAIL (X / SX.X)
- (FB) FLUSH BEAM
- COLUMN BELOW
- EXISTING STRUCTURAL WALL
- COVERED TRELLIS w/ 1/2" SHEATHING

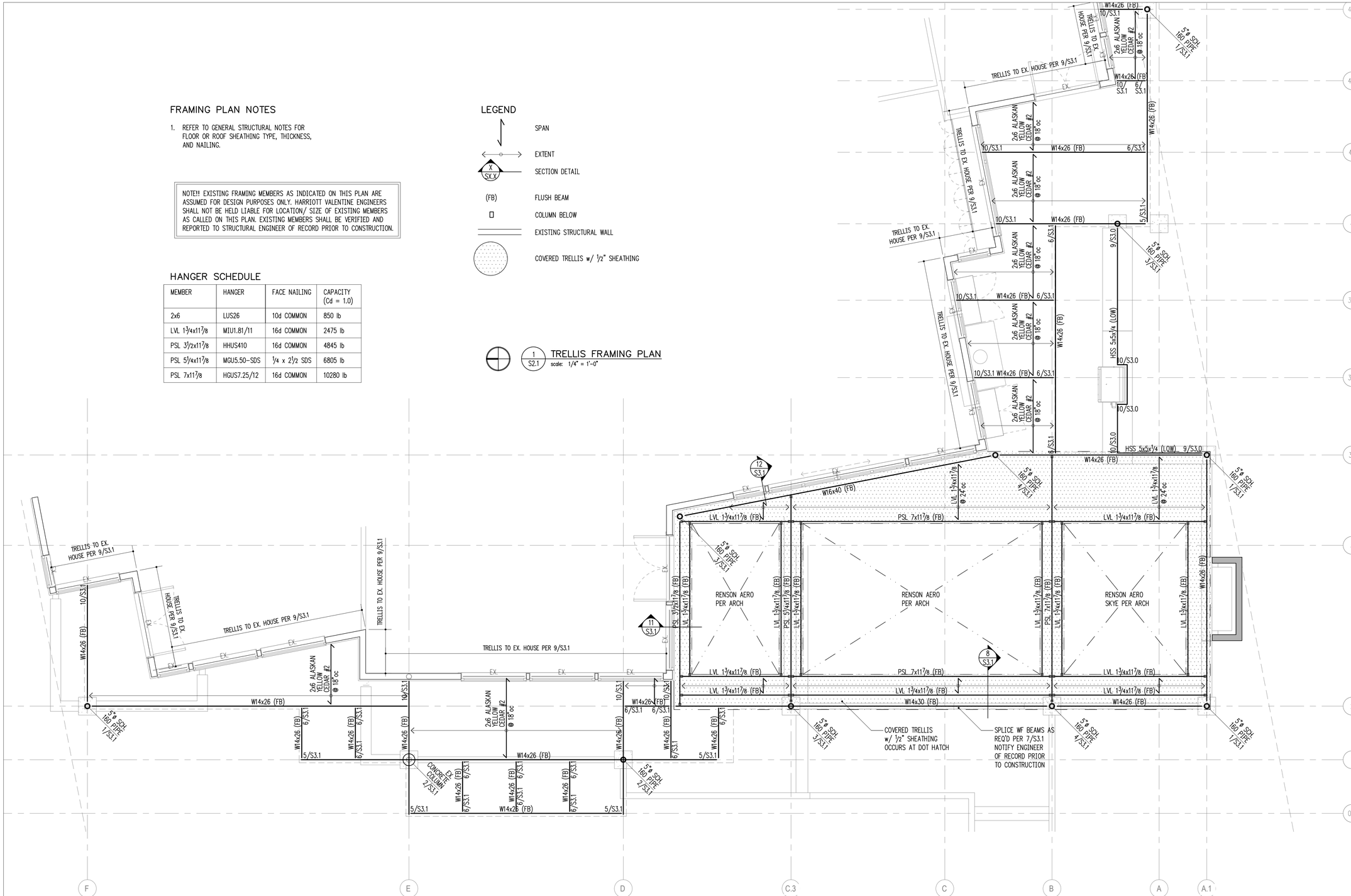

HV

Harriott Valentine Engineers Inc.
1932 First Avenue, Suite 720
Seattle, Washington 98101-2447
tel 206 624 4760 fax 206 447 6971
www.harriottvalentine.com

JAMES A. HARRIOTT — STATE OF WASHINGTON — 22019 — STRUCTURAL ENGINEER — PROFESSIONAL ENGINEER

5/6/24

Project Contact

Kevin Tsuchida
tel 206 624 4760
fax 206 447 6971
ktsuchida@harriottvalentine.com

Project Architect

Neiman Taber
1435 34th Ave
Seattle, WA 98122

Project

Rosen Trellis
3009 60th Ave SE
Mercer Island, WA 98040

Issue Date	Issue Description
05/06/24	Permit Set

Building Department Approval

Drawing Title

TRELLIS FRAMING PLAN

Drawing Number

S2.1

ROSEN TRELLIS

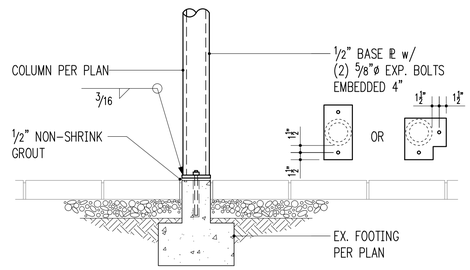

3/4" = 1'-0" 2

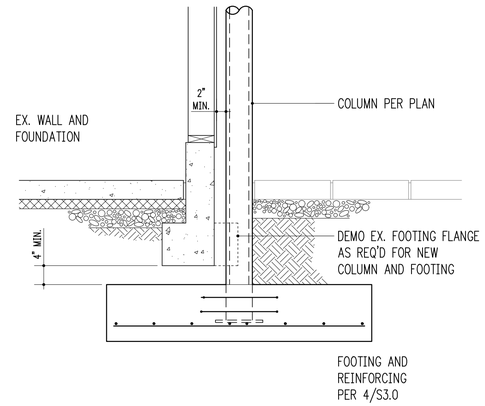

3/4" = 1'-0" 3

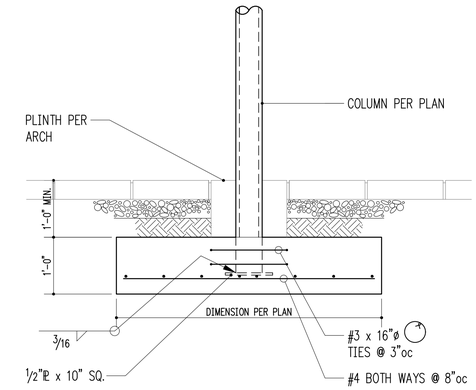

3/4" = 1'-0" 4

3/4" = 1'-0" 5

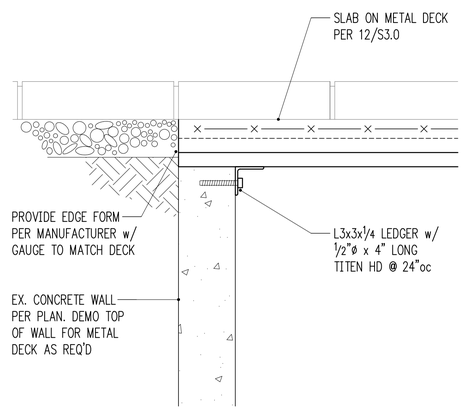

1 1/2" = 1'-0" 6

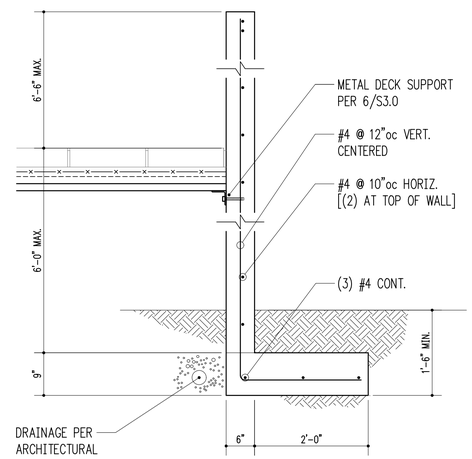

3/4" = 1'-0" 7

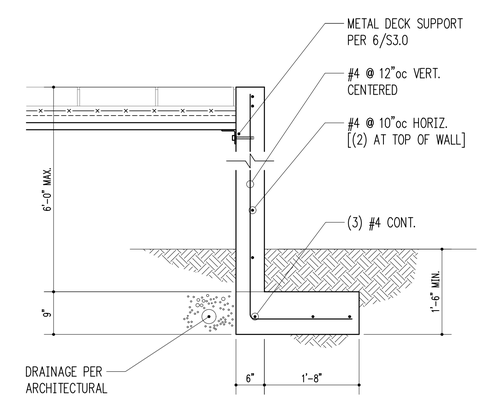

3/4" = 1'-0" 8

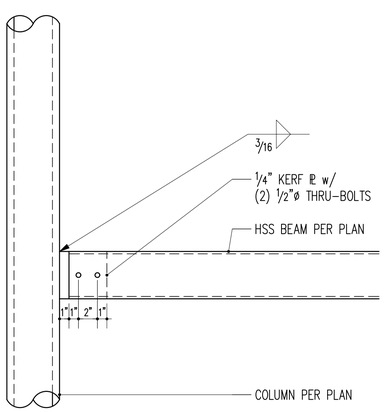

FLOATING COUNTER TO COLUMN

1 1/2" = 1'-0" 9

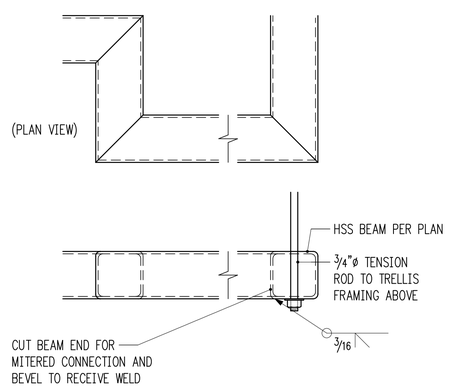

FLOATING COUNTER SUPPORT

1 1/2" = 1'-0" 10

VERCO W3 FORMLOK WITH G60 COATING, MINIMUM SECTION PROPERTIES:

DECK GAUGE	I (in^4)	S^+ (in^3)	S^- (in^3)	
22	0.718	0.418	0.444	
20	0.896	0.534	0.564	[PROPERTIES PER FOOT OF WIDTH]
18	1.203	0.767	0.767	
16	1.509	0.960	0.960	

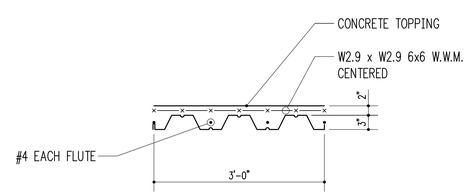

VERCO W3 STEEL FLOOR DECK & TOPPING

1. USE 16, 18, 20, OR 22 GAUGE DECK AS NOTED AT LEFT AND ON PLAN. DECK SHALL HAVE 150 PSF SUPERIMPOSED LOAD CAPACITY.

   MAXIMUM SINGLE SPAN FOR 22 GAUGE DECK = 8'-6".
   MAXIMUM SINGLE SPAN FOR 20 GAUGE DECK = 10'-0".
   MAXIMUM SINGLE SPAN FOR 18 GAUGE DECK = 12'-0".
   MAXIMUM SINGLE SPAN FOR 16 GAUGE DECK = 12'-6".

   THIS NOTE ASSUMES SHORING WILL NOT BE USED.

2. FOLLOW SPAN LAYOUTS AS SHOWN ON PLAN.

3. PROVIDE (4) 1/2"ø PUDDLE WELDS PER SHEET TO ALL SUPPORTS PERPENDICULAR TO DECK FLUTES.

4. PROVIDE 1/2"ø PUDDLE WELDS @ 12"oc WHERE DECK ORIENTATION CHANGES AND OTHER SUPPORTS PARALLEL TO DECK FLUTES.

5. CONNECT DECK SEAMS WITH BUTTON PUNCHES @ 24"oc.

6. DECK TYPE MUST STRICTLY MEET CRITERIA LISTED ABOVE INCLUDING ICBO REPORT ALLOWABLE SHEAR AND SUPERIMPOSED LOADS. SUBMIT DECK INFORMATION TO ENGINEER PRIOR TO BEGINNING SHOP DRAWINGS.

3/4" = 1'-0" 12

HV

Harriott Valentine Engineers Inc.
1932 First Avenue, Suite 720
Seattle, Washington 98101-2447
tel 206 624 4760 fax 206 447 6971
www.harriottvalentine.com

5/6/24

Project Contact
Kevin Tsuchida
tel 206 624 4760
fax 206 447 6971
ktsuchida@harriottvalentine.com

Project Architect
Neiman Taber
1435 34th Ave
Seattle, WA 98122

Project
Rosen Trellis
3009 60th Ave SE
Mercer Island, WA 98040

Issue Date	Issue Description
05/06/24	Permit Set

Building Department Approval

Drawing Title
STRUCTURAL DETAILS

Drawing Number
S3.0

ROSEN TRELLIS

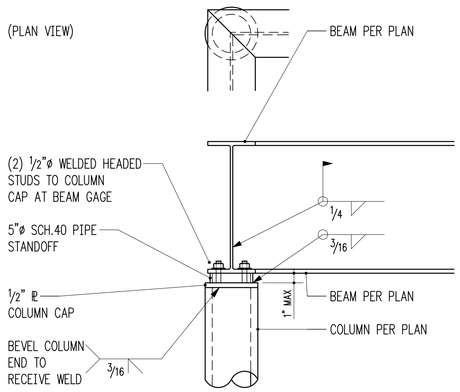

WF TO WF MITERED CONNECTION OVER COLUMN

1 1/2" = 1'-0" 1

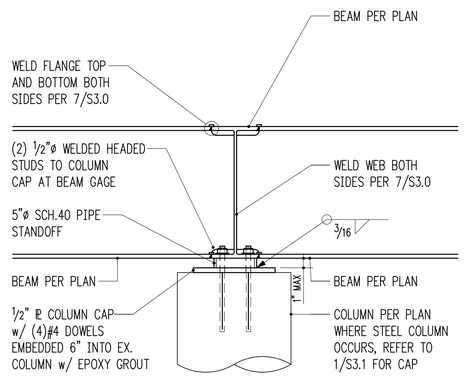

WF CONTINUOUS OVER CONCRETE COLUMN

1 1/2" = 1'-0" 2

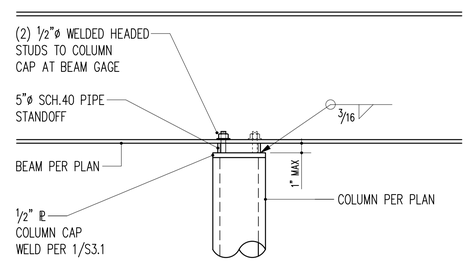

WF CONTINUOUS OVER COLUMN

1 1/2" = 1'-0" 3

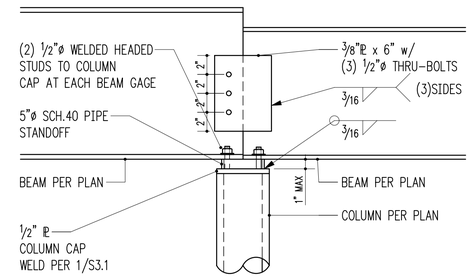

WF BOTH SIDES OVER COLUMN

1 1/2" = 1'-0" 4

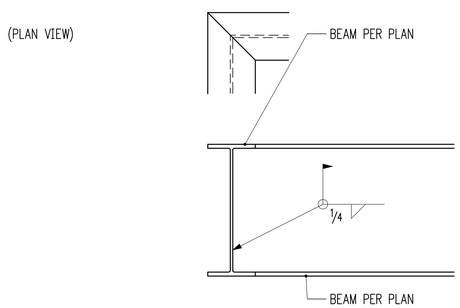

WF TO WF MITERED CONNECTION

1 1/2" = 1'-0" 5

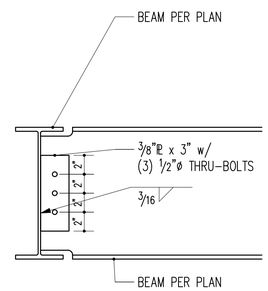

WF TO WF

1 1/2" = 1'-0" 6

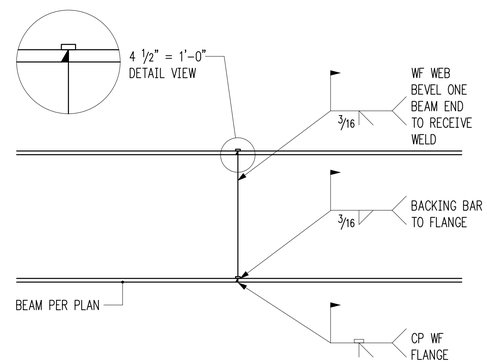

CP SITE WELD BEAM SPLICE

1 1/2" = 1'-0" 7

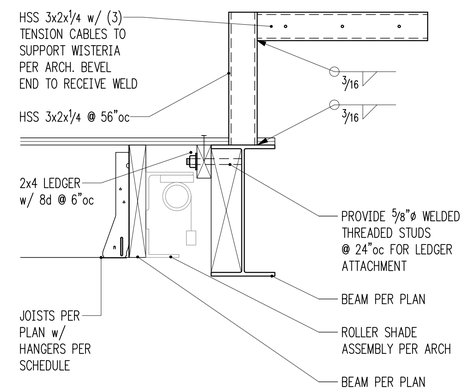

WF BEAM w/ WISTERIA SUPPORT AND SHADE

1 1/2" = 1'-0" 8

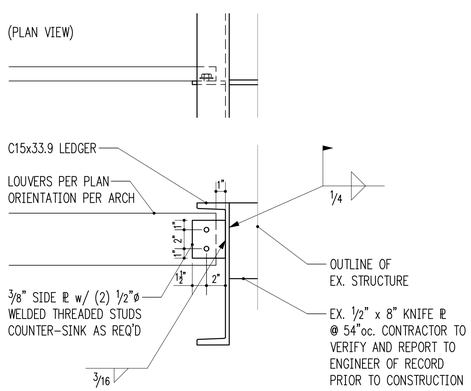

OPEN TRELLIS TO EX. KNIFE PLATE

1 1/2" = 1'-0" 9

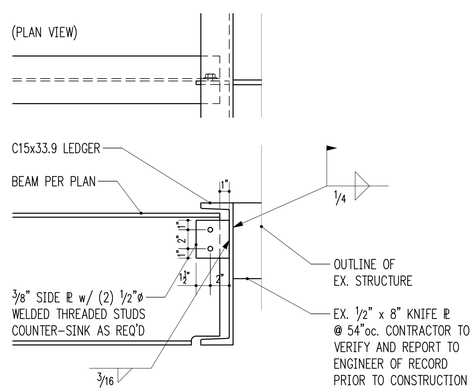

WF TO EX. KNIFE PLATE

1 1/2" = 1'-0" 10

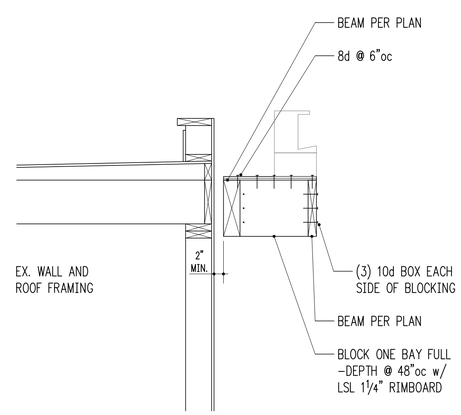

3/4" = 1'-0" 11

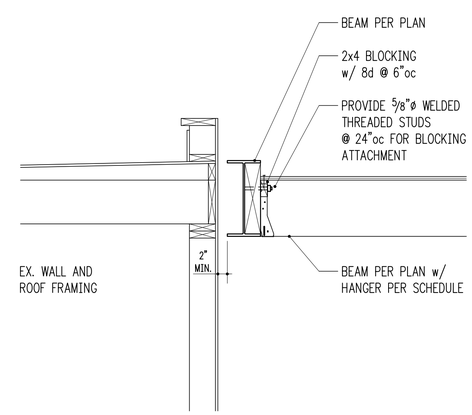

3/4" = 1'-0" 12

HV

Harriott Valentine Engineers Inc.
1932 First Avenue, Suite 720
Seattle, Washington 98101-2447
tel 206 624 4760 fax 206 447 6971
www.harriottvalentine.com

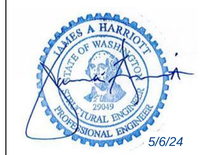

5/6/24

Project Contact
Kevin Tsuchida
tel 206 624 4760
fax 206 447 6971
ktsuchida@harriottvalentine.com

Project Architect
Neiman Taber
1435 34th Ave
Seattle, WA 98122

Project
Rosen Trellis
3009 60th Ave SE
Mercer Island, WA 98040

Issue Date	Issue Description
05/06/24	Permit Set

Building Department Approval

Drawing Title
STRUCTURAL DETAILS

Drawing Number
S3.1

ROSEN TRELLIS