structural calculations for:

talerman-simon residence

3879 west mercer way
mercer island washington

client: floisand studio

15 august 2018
Δ 3 oct 2018
(NOTED SITE WALLS)

index:

dc-	design criteria
kp-	key plans
lt-	lateral analysis
rf-	roof framing
uf-	upper floor framing
mf-	main floor framing
fd-	foundations

giraf design
9220 roosevelt way ne seattle wa 98115-2842
(206) 621-0060 p (206) 621-0061 f
girafdesign@gmail.com http://girafdesign.net

LOCATION:
3879 WEST MERCER WAY
MERCER ISLAND WASHINGTON

47.5748° N
122.2404° W

SEISMIC (PER USGS)

(SEE DC-2)

WIND (MERCER ISLAND WIND MAP)

85 MPH
EXPOSURE C
Kzt = 1.3 (WORST CASE)

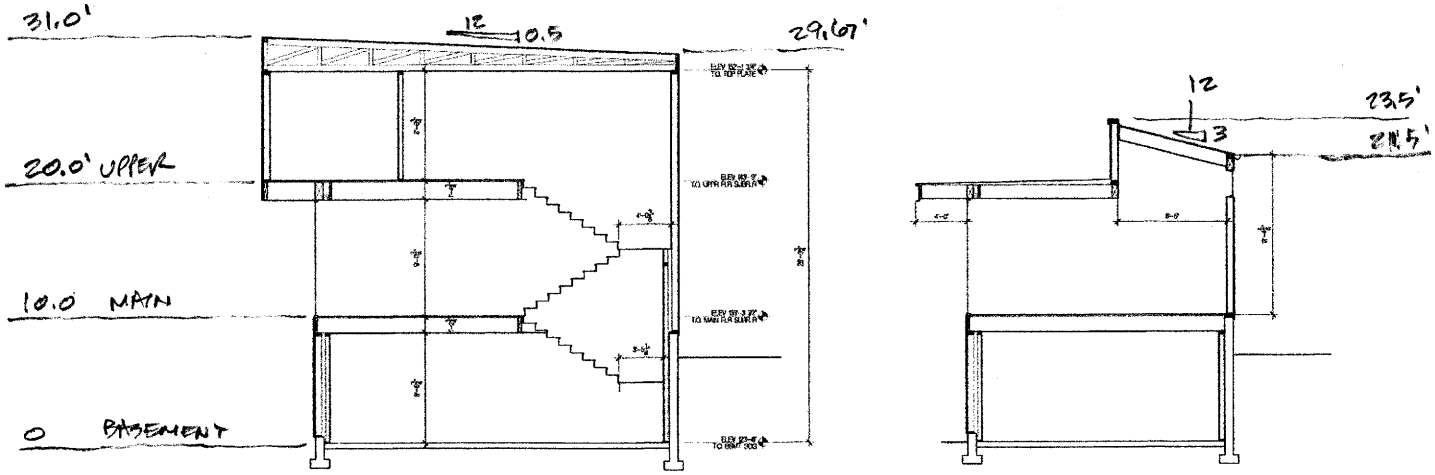

giraf design
9220 roosevelt way ne
seattle wa 98115-2842
(206) 621-0060 p
(206) 621-0061 f
girafdesign@gmail.com
http://girafdesign.net

project: TAUERMAN - SIMON RESIDENCE

client: FLOISAND STUDIO

date: 6-24-18

proj #: 2018-024

sheet: DC-1

USGS Design Maps Summary Report

User-Specified Input

Report Title	talerman-simon residence Sun June 24, 2018 19:10:19 UTC
Building Code Reference Document	2012/2015 International Building Code (which utilizes USGS hazard data available in 2008)
Site Coordinates	47.5748°N, 122.2404°W
Site Soil Classification	Site Class D – "Stiff Soil"
Risk Category	I/II/III

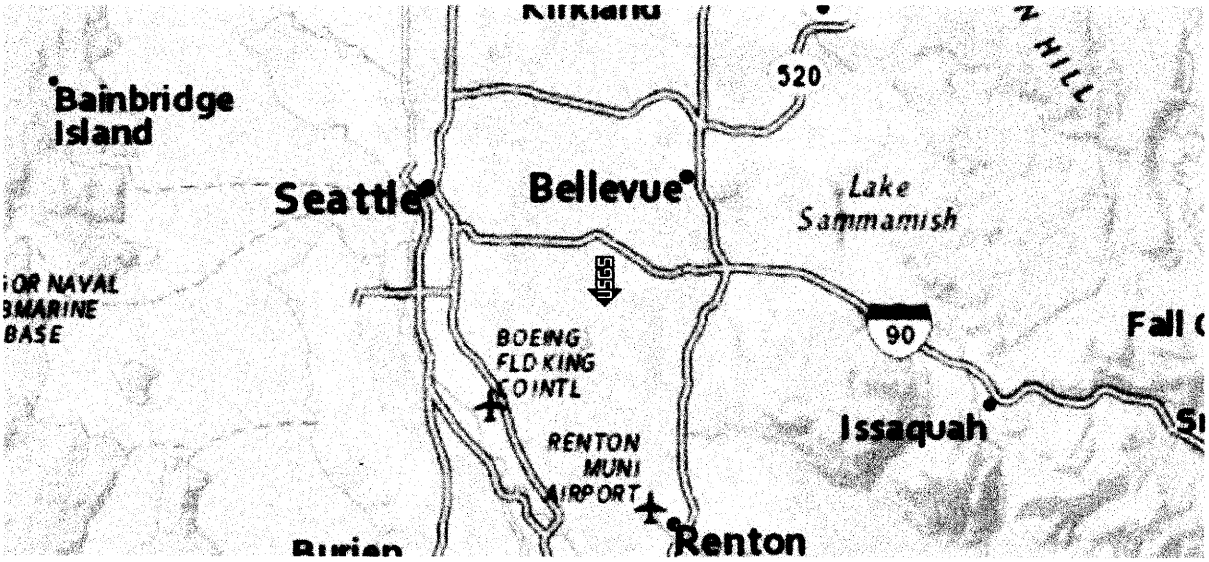

USGS-Provided Output

S_S =	1.406 g	S_{MS} =	1.406 g	S_{DS} =	0.938 g	Fa = 1.0
S_1 =	0.541 g	S_{M1} =	0.812 g	S_{D1} =	0.541 g	Fv = 1.50

For information on how the SS and S1 values above have been calculated from probabilistic (risk-targeted) and deterministic ground motions in the direction of maximum horizontal response, please return to the application and select the "2009 NEHRP" building code reference document.

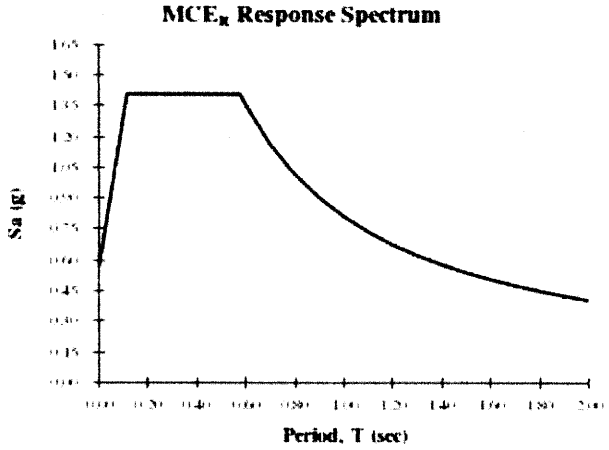

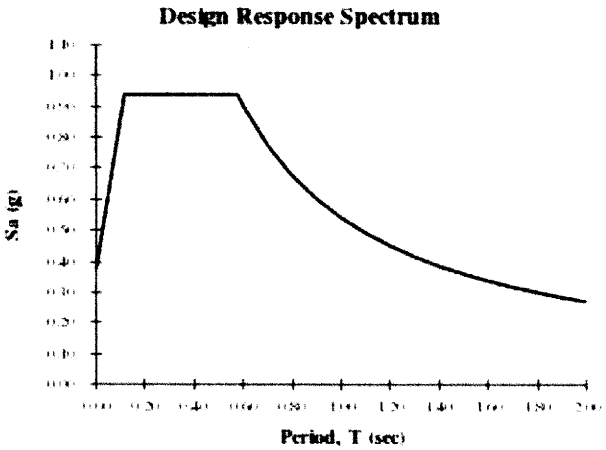

Although this information is a product of the U.S. Geological Survey, we provide no warranty, expressed or implied, as to the accuracy of the data contained therein. This tool is not a substitute for technical subject-matter knowledge.

DC-2

seismic loads (asce 7-10)

equiv lateral force procedure

risk factor	II	1.5-1
	I	
imp. factor	1	table 1.5-2
site class	D	table 20.3-1
R =	6.5	table 12.2-1

S_s =	1.406		usgs maps
S_1 =	0.541		usgs maps
F_a =	1	table 11.4-1	
F_v =	1.5	table 11.4-2	
S_{DS}=	0.938		
S_{D1}=	0.541		
Cs=	0.14431	eqn 12.8-2	
Cs_{ASD}=	0.10102		

vertical design loads

criteria
asce 7-10
ibc 2015

dead loads

			TYPICAL FLOOR		GARAGE FLOOR	
roofing	3	psf	flooring	2 psf	3" CONC.	37.5 psf
1/2" plywood	1.5	psf	3/4" plywood	2.3 psf	1 1/8" PLY.	3.4 psf
trusses	4	psf	joists/beams	4 psf	JOISTS/BMS	8.0 psf
insulation	1	psf	misc/mech	1 psf	MISC/MECH	1.0 psf
misc/mech	1	psf	5/8" gwb	3.1		
5/8" gwb	3.1	psf		12.4 psf		49.9 psf
	13.6	psf				
use	15	psf	use	15 psf		50 psf

live loads

roof (snow)	62	psf	garage 40 psf
floor (residential)	40	psf	decks 60 psf

soil bearing

2000 psf zipper-geo

giraf design
9220 roosevelt way ne
seattle wa 98115-2842
(206) 621-0060 p
(206) 621-0061 f

project:	talerman-simon residence	date:	24/06/2018
		project #:	2018-024
		design:	nic
	floisand studio	sheet:	**dc-3**

wind loads (asce 7-10)

MWFRS part 1

exposure	C				
V=	85	mph			
K_d=	0.85		table 26.6-1		
risk factor	1		table 1.5-1		
G=	0.85		26.9.1		

K_{zt}= $(1+K_1K_2K_3)^2$ = **1.30**

0.5:12 roof

roof angle	2.39	degrees
ground to top of roof	30	ft
bottom of roof to top of roof	1.33	ft
(mean roof height) h=	29.335	ft

3:12 roof

roof angle	14.04	degrees
ground to top of roof	23.5	ft
bottom of roof to top of roof	2	ft
(mean roof height) h=	22.5	ft

pressure coefficients from figure 6-6:

bldg. face	C_p
windward wall	0.8
leeward wall	-0.5
windward roof	0
leeward roof	-0.6

*note: Cp values are conservative worst case values

pressures

Ht	K_z	q_z	$P_{ww\,walls}$	$P_{lwwalls}$	**P_{walls} (psf)**
0-15	0.85	17.37	11.81	8.51	**20.33**
15-20	0.9	18.39	12.51	8.51	**21.02**
20-25	0.94	19.21	13.06	8.51	**21.58**
25-30	0.98	20.03	13.62	8.51	**22.13**
30-40	1.04	21.26	14.45	8.51	**22.97**

P_{roof} (psf)	
10.21	**0.5:12 rf.**

P_{roof} (psf)	
9.80	**3:12 roof**

giraf design
9220 roosevelt way ne
seattle wa 98115-2842
(206) 621-0060 p
(206) 621-0061 f

project: talerman-simon residence

floisand studio

date: 24/06/2018
project #: 2018-024
design: nic
sheet: **dc-4**

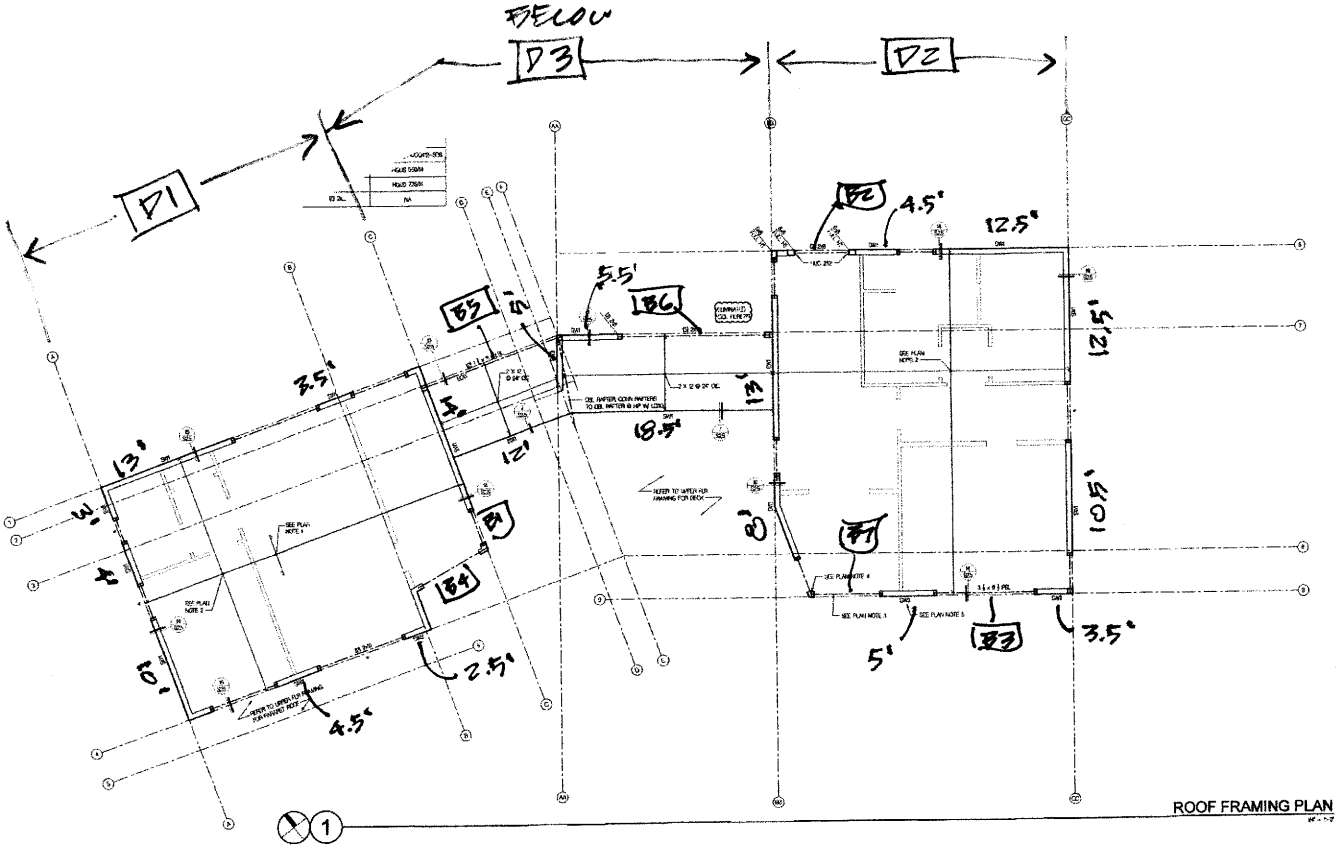

PLAN NORTH

ROOF FRAMING KEY PLAN

giraf design
9220 roosevelt way ne
seattle wa 98115-2842
(206) 621-0060 office
(206) 898-4229 cell
girafdesign@gmail.com
http://girafdesign.net

project: TAUERMAN - SIMON RESIDENCE

client: FLOKSAND STUDIO

date: 08-12-18

proj #: 2018.024

sheet: 1 KP-1

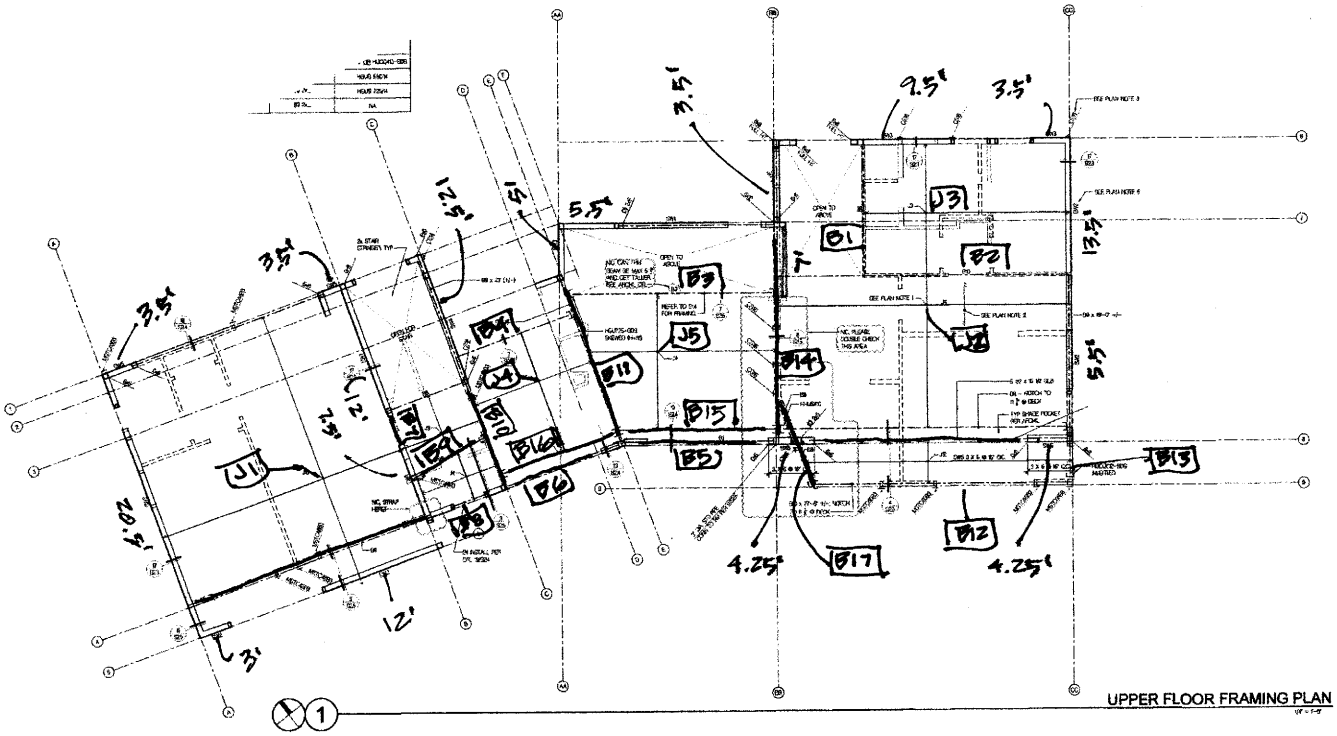

PLAN
NORTH

UPPER FLOOR FRAMING KEY PLAN

giraf design
9220 roosevelt way ne
seattle wa 98115-2842
(206) 621-0060 office
(206) 898-4229 cell
girafdesign@gmail.com
http://girafdesign.net

project: TALERMAN - SIMON RESIDENCE

client: FLOISANO STUDIO

date: 08-12-18

proj #: 2018-024

sheet: AKP-2

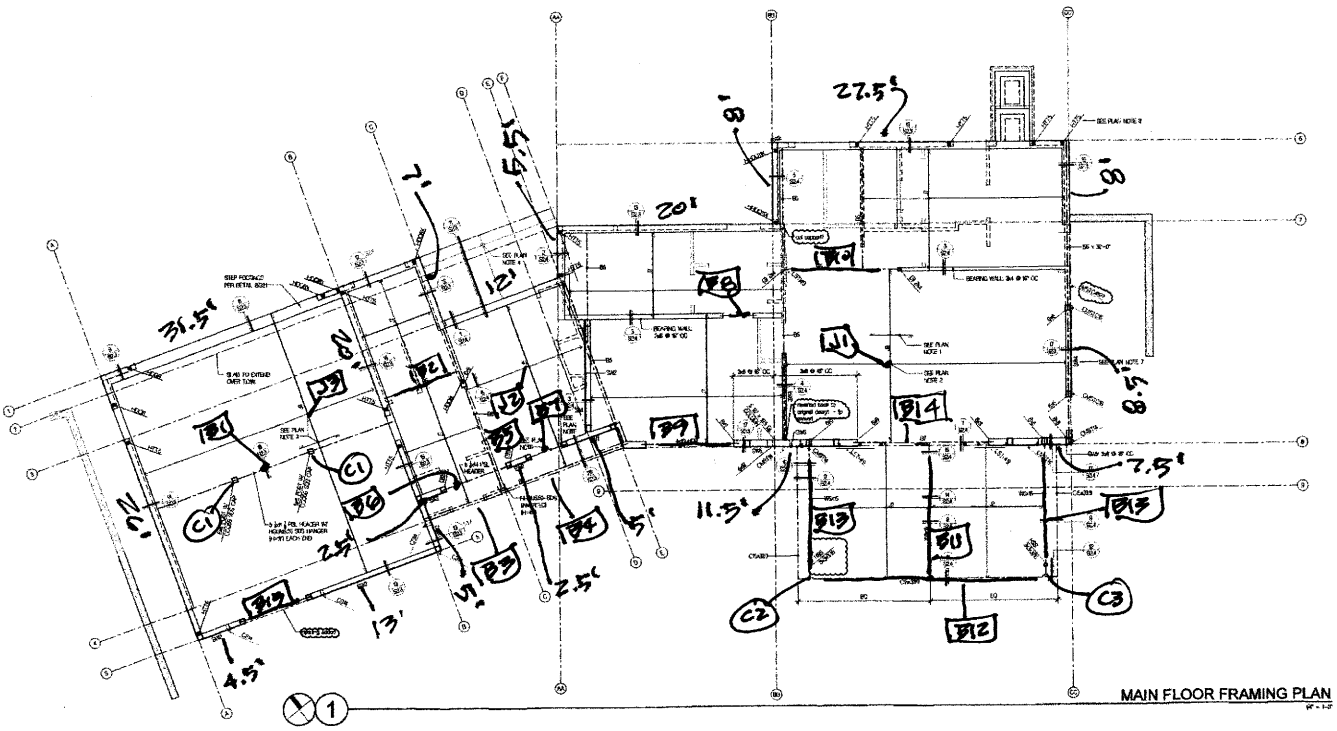

PLAN NORTH

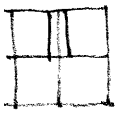

MAIN FLOOR FRAMING KEY PLAN

giraf design
9220 roosevelt way ne
seattle wa 98115-2842
(206) 621-0060 office
(206) 898-4229 cell
girafdesign@gmail.com
http://girafdesign.net

project: TALERMAN . SIMON RESIDENCE

client: FLOISAND STUDIO

date: 08.17-18

proj #: 2018-024

sheet: AKP-3

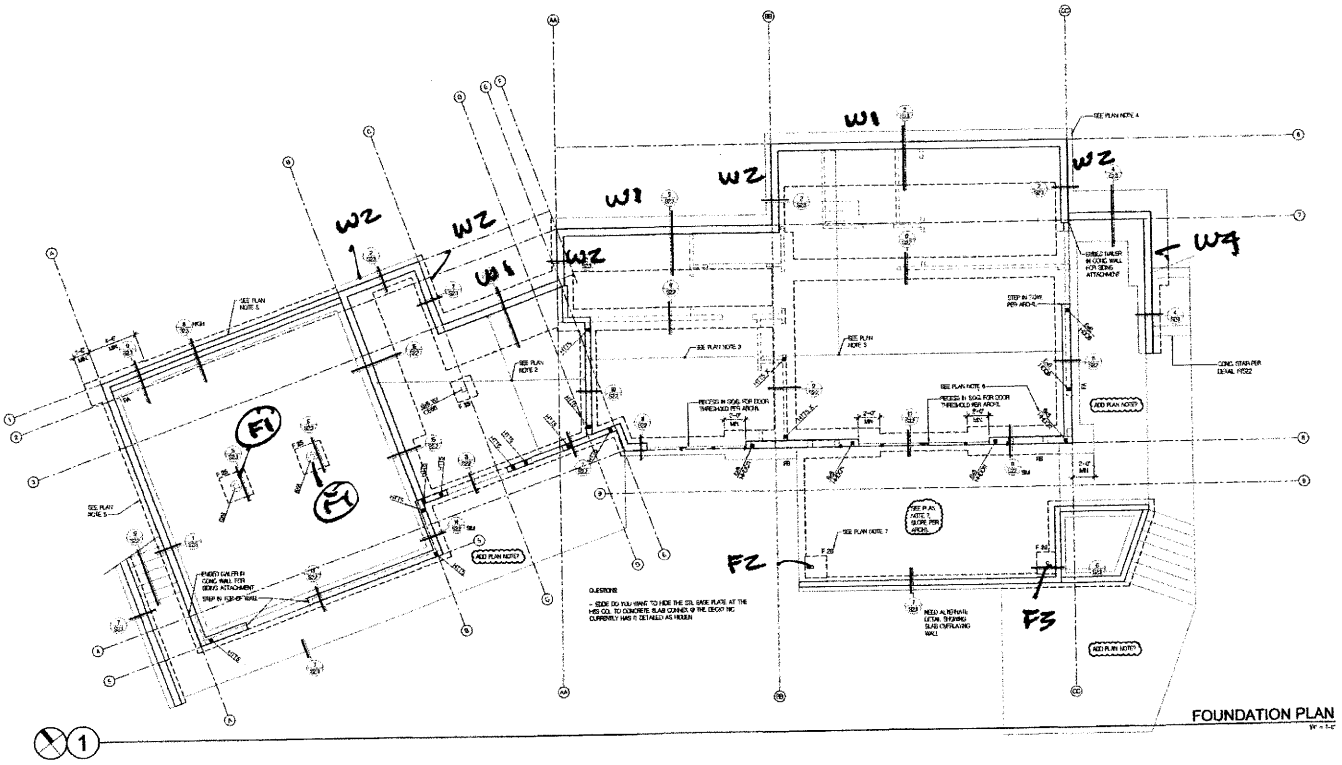

PLAN NORTH

FOUNDATION KEY PLAN

giraf design
9220 roosevelt way ne
seattle wa 98115-2842
(206) 621-0060 office
(206) 898-4229 cell
girafdesign@gmail.com
http://girafdesign.net

project: TAUERMAN-SIMON RESIDENCE

client: FLOISAND STUDIO

date: 08.12.18

proj #: 2018-024

sheet: DKP-4

LATERAL

SEISMIC

DIAPH ↓ TRIB WALLS ↓

ROOF

D1 A = 690 □ DL = 15 + 8 = 23 PSF

D2 A = 867 □ DL = 15 + 8 = 23 PSF

∴ W ROOF = 35.8 → 36k

UPPER FLOOR

A FLOOR = 1557 □ DL = 15+16 = 31 PSF

D3 = 313 □ DL = 15 + 8 = 23 PSF

A DECK = 607 □ DL = 15 + 8 = 23 PSF

∴ W UPPER = 69.4 → 70 k

MAIN

A FLOOR = 1627 □ DL = 15+16 = 31 PSF

A GARAGE = 600 □ DL = 50 + 16 = 66 PSF

A DECK = 223 □ DL = 15 PSF

∴ W MAIN = 93.4 → 94k

∴ ΣW = 200 k.

∴ EASD = 20.20k

REDISTRIBUTION

LEV (x)	Hx (FT)	Wx (K)	Hx·Wx (FT·K)	Vx (ASD) (K)
R	30	36	1080	6.38
U	20	70	1400	8.27
M	10	94	940	5.55
	Σ	200	3420	20.20

Δ 8-13-18 SLIGHT CHANGES TO AREAS FOR SEISMIC BUT NOT CLOSE TO MATCHING WIND LOADS (MOSTLY REDUCTIONS)

WIND (ASD LOADS)

ROOF

NORTH-SOUTH

D1 $\bar{w}$ = 149 plf

D2 $\bar{w}$ = 149 plf

∴ W ROOF = 8.79k.

EAST-WEST

D1 $\bar{w}$ = 149 plf

D2 $\bar{w}$ = 149 plf

∴ W ROOF = 8.20 k.

UPPER

$\bar{w}_{L.C.}$ = 221 plf

$\bar{w}_{C\ BB}$ = 215 plf

$\bar{w}_{BB-CC}$ = 221 plf

∴ W UPPER = 20.13k

WIND LEE (164)

$\bar{w}$ = 136 + 85 = 221 plf

$\bar{w}_{A-B}$ (WIND) = 142 plf

A-B (LEE) = 113 plf

$\bar{w}_{1-2/8-9}$ = 124 plf

W UPPER FROM WEST = 4.27k

W UPPER FROM EAST = 5.52k

ΣW UPPER = 9.79k.

MAIN

$\bar{w}$ = 167 plf

∴ W MAIN = 15.11 k.

∴ ΣW N-S = 44.03k.

WIND LEE (167)

$\bar{w}$ = 125 + 78 = 203 plf

$\bar{w}$ DECK = 81 plf

W MAIN FROM WEST = 4.51k

W MAIN FROM EAST = 5.65k

∴ ΣW MAIN = 10.16k

∴ ΣW E-W = 28.15k

WIND CRITICAL BY FAR THROUGHOUT

giraf design
9220 roosevelt way ne
seattle wa 98115-2842
(206) 621-0060 p
(206) 621-0061 f
girafdesign@gmail.com
http://girafdesign.net

project: TAUERMAN-SIMON RESIDENCE

client: FLOISAND STUDIO

date: Δ 8-13-18

proj #: 2018-024

sheet: LT-1

DIAPHRAGMS

ROOF SEE KP-1

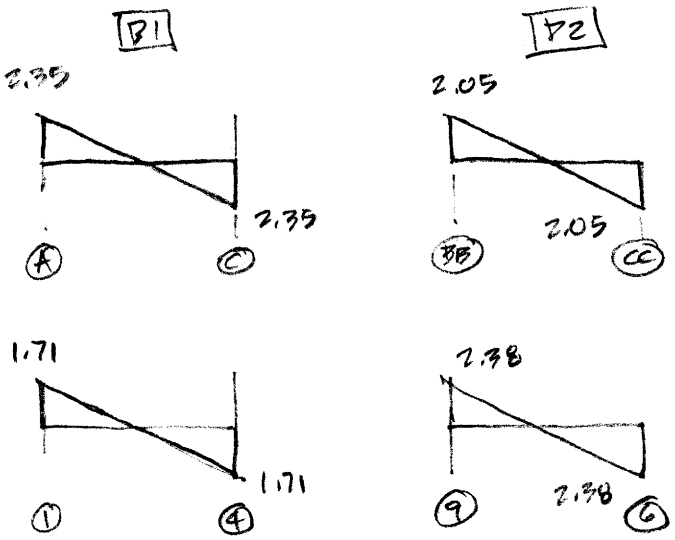

MAIN SEE KP-3

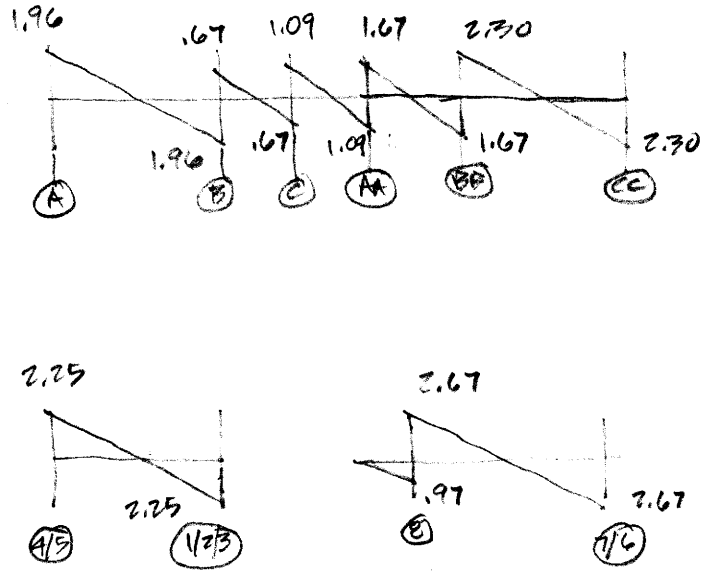

UPPER SEE KP-2

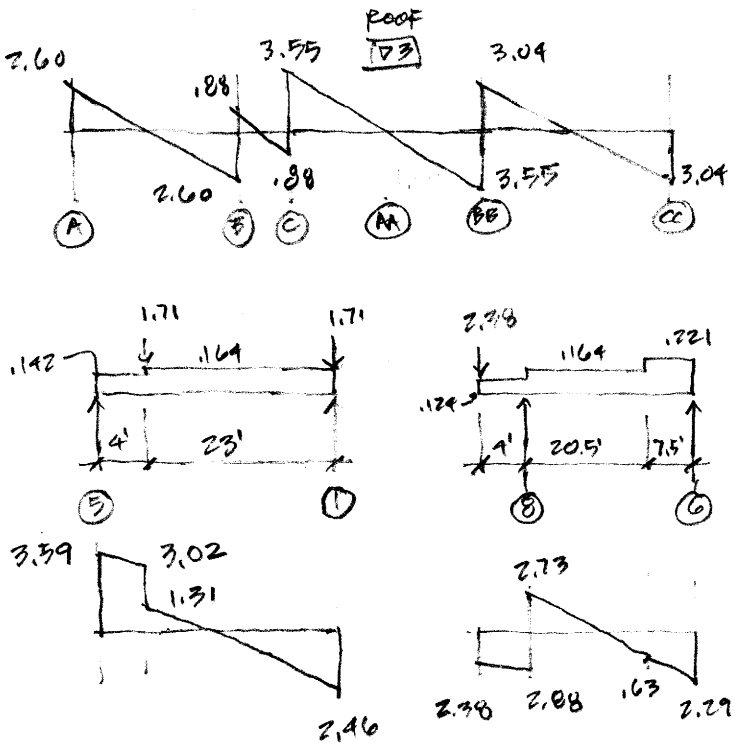

giraf design
9220 roosevelt way ne
seattle wa 98115-2842
(206) 621-0060 p
(206) 621-0061 f
girafdesign@gmail.com
http://girafdesign.net

project: TALEKMAN-SIMON RESIDENCE

client: FLOISAND STUDIO

date: 08-13-18

proj #: 2018-024

sheet: LT-2

SHEAR WALLS

(1) VROOF = 1.71k. ℄ lw = 16.5'
v = 104 plf SW1
FHD = 1.14 - DL MSTC48B3 / CS16.

VUPPER = 4.17k ℄ lw = 7'
v = 596 plf SW5
FHD = 7.09 - DL HDQ8

(1/2/3) VMAIN = 6.42k. ℄ lw = 43.5'
v = 148 plf 8" CONC
vc = 1.6 psi 2x - w/ 5/8"ϕ @ 48" o.c.

(4) VROOF = 1.71k ℄ lw = 7'
v = 244 plf USE SW2
FHD = 2.68 - DL MSTC48B3 / CS14

(5) VUPPER = 3.59k ℄ lw = 15'
v = 239 plf SW2
FHD = 2.39 - DL CS14

(4/5) VMAIN = 5.84k. ℄ lw = 27.5'
v = 212 plf USE SW2
FHD = 4.51 - DL HTT5

(6) VROOF = 2.38k. ℄ lw = 17'
v = 140 plf SW1
FHD = 1.54 - DL CS16
(3.09 @ FURL HT. COL.)

VUPPER = 4.67k. ℄ lw = 13'
v = 359 plf USE SW3
FHD = 5.13 - DL HTT5

(7/6) VMAIN = 7.34k. ℄ lw = 47.5'
v = 154 plf 8" CONC. WALL
vc = 1.6 psi ✓
2x - w/ 5/8"ϕ @ 48" o.c.

(9) VROOF = 2.38k. ℄ lw = 8.5'
v = 280 plf USE SW3
FHD = 3.08 - DL MSTC66B3

(8) VUPPER = 5.61k. ℄ lw = 8.5'
v = 660 plf SW5
FHD = 6.6 k - DL CMST14

VMAIN = 9.25k. ℄ lw = 19'
v = 487 plf USE SW5
FHD = 11.5 - DL HHDQ11

(A) VROOF = 2.35k. ℄ lw = 17'
v = 139 plf SW1
FHD = 1.52 - DL (STRAP WINDOWS NO NET UPLIFT)

VUPPER = 4.95k. ℄ lw = 20.5'
v = 241 plf SW2
FHD = 3.85 - DL HTT5

VMAIN = 6.91k. ℄ lw = 26'
v = 266 plf 8" CONC. WALL
vc = 2.8 psi ✓
4x - PLATE w/ 5/8"ϕ @ 48" o.c.

CONT →

giraf design
9220 roosevelt way ne
seattle wa 98115-2842
(206) 621-0060 p
(206) 621-0061 f
girafdesign@gmail.com
http://girafdesign.net

project: TAUERMAN - SIMON RESIDENCE
date: 08-13-18
proj #: 2018-029
client: FLOISAND STUDIO
sheet: LT.3

(B) VUPPER = 3.48k. ℄ hw = 19.5'
v = 178 plf SW1
FHD = 1.78 - DL HTT5 / CS14

VMAIN = 6.11k. ℄ hw = 20' CONC. 5' WOOD
v CONC = 306 plf
8" CONC. WALL (SW2)
vc = 3.2 psi ✓
1x - W/ 5/8"φ @ 48" o.c.

(C) VROOF = 2.35k. ℄ hw = 14'
v = 168 plf SW1
FHD = 1.85 - DL CS14 / MSTC48B3

VUPPER = 6.78k. ℄ hw = 12.5'
v = 542 plf SW4
FHD = 7.14 - DL HDQ8

VMAIN = 8.54k. ℄ hw = 7'
v = 1220 plf 8" CONC. WALL
vc = 12.7 psi ✓

FROM 2 LOW ROOF
(AA) VUPPER = 2.06k. ℄ hw = 5'
v = 412 plf SW3
FHD = 4.94 - DL HTT5

VMAIN = 4.82 ℄ hw = 5.5'
v = 876 plf 8" CONC WALL
vc = 9.1 psi ✓

FOR REDUNDANCY USE STUD WALL
(AA') VMAIN = 2.76k. hw = 10'
v = 276 plf SW2
FHD = 2.76 - DL HTT5

(BB) VROOF = 2.05k. ℄ hw = 21'
v = 98 plf SW1
FHD = 1.07 - DL CS16

VUPPER = 8.64k. ℄ hw = 10.5'
v = 822 plf SW5
FHD = 8.23 - DL HDQ8

VMAIN = 12.61k. ℄ hw = 8'
v = 1576 plf 8" CONC. WALL
vc = 16.4 psi ✓ (*)

(CC) VROOF = 2.05k. ℄ hw = 23'
v = 89 plf SW1
FHD = .98 - DL NO NET UPLIFT

VUPPER = 5.09k. ℄ hw = 19'
v = 268 plf SW2
FHD = 3.66 - DL CMSTC 16 / HTT5
MSTC 48 B3

VMAIN = 7.39k. ℄ hw = 8' CONC 9.5 WOOD
v CONC = 924 psi ✓ 8" CONC
v WOOD = 418 plf
USE SW4
FHD = 8.21 - DL HDQ8

(*) FOR REDUNDANCY USE STUD WALL
(BB') VMAIN = 3.97k. ℄ hw = 8'
v = 496 plf SW4
FHD = 4.96 - DL HTT5

giraf design
9220 roosevelt way ne
seattle wa 98115-2842
(206) 621-0060 p
(206) 621-0061 f
girafdesign@gmail.com
http://girafdesign.net

project: TALERMAN-SIMON RESIDENCE
client: FLOISANO STUDIO

date: 08-13-18
proj #: 2018.024
sheet: LT-4

ROOF FRAMING

SEE KP-1

TRUSSES

DESIGN BY OTHERS

RAFTERS

24" o.c.

R1 $l = 9'$
$w = 80$ plf

1 3/4 x 11 7/8 LSL @ 24" o.c.

FOR INSULATION

BEAMS

B1 $l = 3.5'$ $M = .96$ ft-k
$w = .63$ klf $V = 1.10$
(2) 2x8

B2 $l = 5'$ $M = 2.0$ ft-k
$w = .64$ klf $V = 1.6$ k
(2) 2x8 $\Delta_{TL} < L/800$

B3 $l = 10.25'$ $M = 8.41$ ft-k
$w = .64$ klf $V = 3.28$ k
3 1/2 x 9 1/2 LSL $\Delta_{TL} = L/400$
USE 3 1/2 x 9 1/2 LSL $\Delta_{TL} = L/800$

B4 $l = 6.5'$ $M = .85$ ft-k
$w = .16$ klf $V = .52$
(2) 2x8 $\Delta_{TL} < L/1000$

B5 $l = 13.25'$ $M = 3.95$ ft-k
$w = .18$ klf $V = 1.2$ k
(2) 1 3/4 x 11 7/8 LSL
$\Delta_{TL} = L/963$

B6 $l = 10.5'$ $M = 2.48$ ft-k
$w = .18$ klf $V = .95$ k
(2) 2x10

B7 $l = 6.25'$ $M = 3.13$ ft-k
$w = .64$ klf $V = 2.0$
(2) 2x10

giraf design
9220 roosevelt way ne
seattle wa 98115-2842
(206) 621-0060 p
(206) 621-0061 f
girafdesign@gmail.com
http://girafdesign.net

project: TALERMAN-SIMON RESIDENCE

client: FLOISAND STUDIO

date: 08-13-18

proj #: 2018-024

sheet: RF-1

UPPER FLOOR FRAMING

SEE KP-2

JOISTS 16" o.c.

J1 $l = 23.5'$ $w = 73$ plf
16" TJI 560 @ 16" o.c.

J2 $l = 27'$ $w = 73$ plf
16" TJI/560 @ 16" o.c.

J3 $l = 19'$ $w = 73$ plf
16" TJI/210 @ 16" o.c.

J4 $l_{MAX} = 11.5'$ $w = 100$ plf
11 7/8" TJI/110 @ 16" o.c.

J5 $l_{MAX} = 12.5'$ $w = 100$ plf
11 7/8" TJI/110 @ 16" o.c.

J2 OPTION 14" TJI.
14" TJI/560 @ 12" o.c.

BEAMS

B1 $l = 12.5'$ $M = 11.9$ ft-k
$w = .61$ klf $V = 3.81$ k
(2) 1 3/4 x 16 LVL $\Delta_{LL} < L/1000$

B2

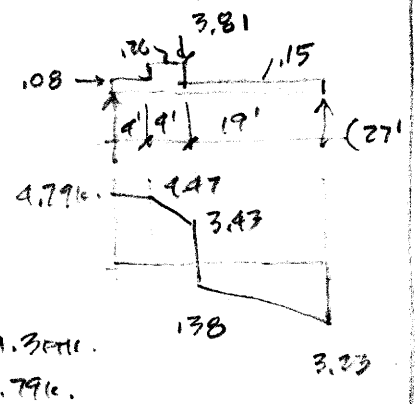

$M = 34.3$ ft-k
$V = 4.79$ k

TRY 5 1/4 x 16 PSL $\Delta_{TL} = L/328$
7 x 16 PSL $\Delta_{TL} = L/440$

B3 $l = 19.5'$ $M = 30.42$ ft-k
$w = .64$ klf $V = 6.24$ k

7 x 11 7/8 PSL ✓ $\Delta_{LL} = L/375$
→ 5 1/4 x 14 PSL $\Delta_{LL} = L/460$

B4 $l = 12'$ $M = 10.98$ ft-k
$w = .61$ klf $V = 3.66$ k
3 1/2 x 11 7/8 LSL $\Delta_{TL} = L/680$

B5 $l = 14'$ $M = 3.7$ ft-k
$w = .15$ klf $V = 1.05$ k
4 x 12 (DF/L #1) $\Delta_{TL} < L/900$

B6 $l = 10'$ $M = 1.88$ ft-k
$\bar{w} = .15$ $V = .75$ k
3 1/2 x 11 7/8 PSL

B7 $l = 3.5'$ $M = 1.49$ ft-k
$w = .97$ klf $V = 1.70$ k
(2) 2x8

B8 $l = 3.25'$ $M = .25$ ft-k
$w = .19$ klf $V = .31$ k
(2) 2x8

B9 $l = 7.5'$ $M = 2.32$ ft-k
$\bar{w} = .33$ klf $V = 1.24$ k

(2) 1 3/4 x 16 LVL

B10

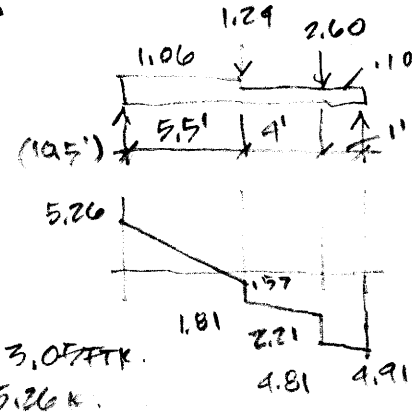

$M = 13.05$ ft-k
$V = 5.26$ k

5 1/4 x 16 PSL (RIP TO 11 7/8 @ DECK)

CONT →

giraf design
9220 roosevelt way ne
seattle wa 98115-2842
(206) 621-0060 p
(206) 621-0061 f
girafdesign@gmail.com
http://girafdesign.net

project: TAUERMAN - SIMON RESIDENCE

client: FLOKSAND STUDIO

date: 08-13-18

proj #: 2018-024

sheet: UF-1

B11

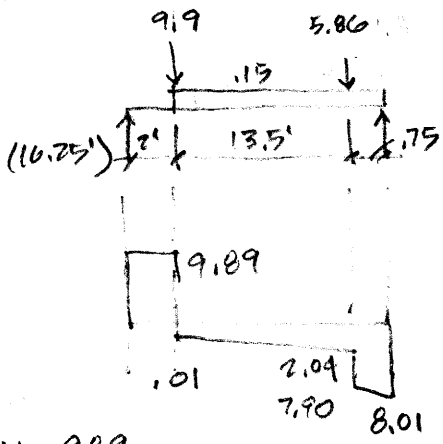

M = 9.89
V = 19.78 FTK.

7x11 7/8 PSL Δ TL = L/548

B12 l = 24' M = 61.9 FTK.
w = .86 klf V = 10.32k.

(2) 5 1/4 x 16 PSL Δ TL = L/321

B13

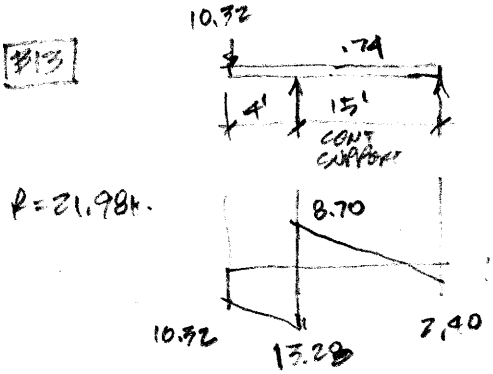

M- = 47.2 FTK.
V = 13.28k

5 1/4 x 16 PSL Δ CANT TL = .97"
USE (2) 5 1/4 x 16 PSL

B14

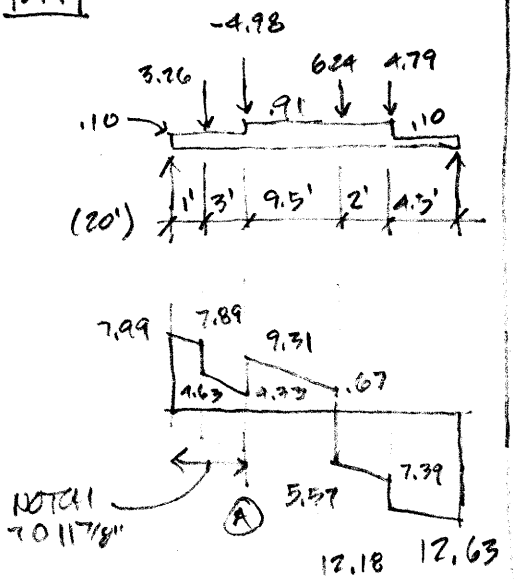

M = 68.78 FTK M+ = 21.38 FTK
V = 12.65k. V+ = 7.99k.

7x16 PSL + 5 1/4 x 16 PSL

ΔTL = L/468

B15 l = 14.5' M = 11.83 FTK
w = .45 klf V = 3.26k.

TRY 3 1/2 x 11 1/4 PSL Δ TL = L/323
5 1/4 x 11 1/4 PSL

B16 l = 11.5' M = 7.44 FTK
w = .45 klf V = 2.6k
3 1/2 x 11 1/4 PSL

B17

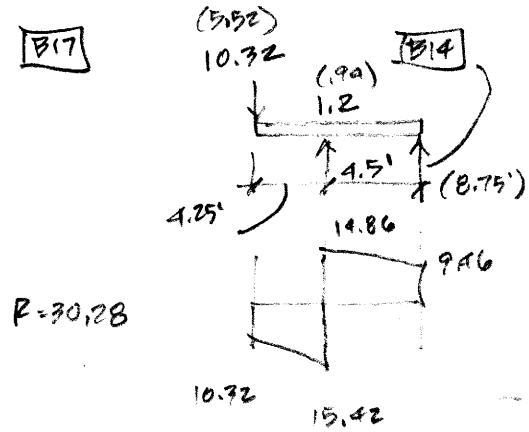

M = 54.72 FTK.
V = 15.42k.
MAX REACTION @ B14
(NO ROOF SNOW) = -4.98

7x16 PSL

Δ CANT TL = L/329.
USE (2) 5 1/4 x 16 PSL (Δ < 1/4")

B18 l = 3.5' M = 1.5 FTK.
w = .98 V = 1.72k.

USE 4x8

B19 l = 3.5' M-
w = .82
(2) 2x8

giraf design
9220 roosevelt way ne
seattle wa 98115-2842
(206) 621-0060 p
(206) 621-0061 f
girafdesign@gmail.com
http://girafdesign.net

project: TALLMAN - SIMON RESIDENCE
client: FLOISAND STUDIO

date: 08-13-18
proj #: 2018-024
sheet: UF-2

MAIN FLOOR FRAMING

SEE KP-3 & KP-4

JOISTS 16" o.c.

J1 $l = 16'$
$w = 73$ plf

14" TJI/210 @ 16" o.c.

J2 $l = 14'$ MAX
14" TJI/110 @ 16" o.c.

J3 $l = 12.5'$ M = 2.34 FTK
$w = 120$ plf V = .75k.

OR 3000# LOAD OVER 4½"x4½"

CASE 1

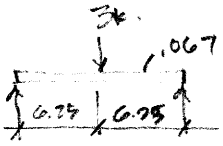

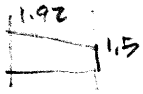

M = 10.68 FTK.
V = 1.92k.

CASE 2

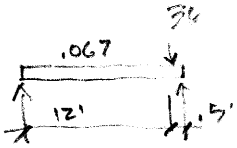

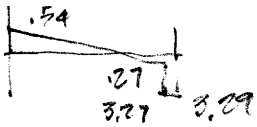

M = 2.18 FTK.
V = 3.29k

3½x11⅞ LSL @16
Δ_u L/527
3½x11⅞ PSL Δ_u L/694 ✓
@16" o.c.

J4 $l = 12.25'$ M = 1.88 FTK.
$w = 100$ plf V = .61k.

2x12 SLOPE TO 7¼" (MIN.)

(2) 2x_ @ 16" o.c.
Δ_u = L/932

J5 $l = 9.25'$ M = 1.07 FTK
$w = 100$ plf V = .96k

2x12 SLOPED TO 8" (MIN.)

Δ_u < L/1000

BEAMS

B1

CASE 1

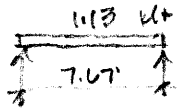

M = 8.30 FTK.
V = 4.33k.

CASE 2

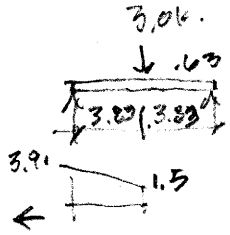

M = 10.37 FTK ←
V = 3.91k.

CASE 3

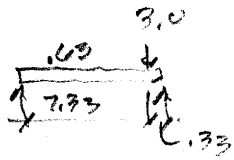

V = 5.29k ←

5¼x9½ PSL
Δ_u ① < L/1000
Δ_u ② < L/1000

FOR DETAILING USE 5¼x11⅞ PSL W/ HGUM 5.25/SDS HANGER.

B2 $l = 7.5'$ M = 3.30 FTK.
$w = 47$ V = 1.76

3½x14 LSL

B3 $l = 7.5'$ M = 3.5 FTK.
$w = .35$ klf V = 1.31k.
MATCH B4

B4 $l = 12'$ M = 2.88 FTK
$w = .166$ V = .96
3½x14 LSL

giraf design
9220 roosevelt way ne
seattle wa 98115-2842
(206) 621-0060 p
(206) 621-0061 f
girafdesign@gmail.com
http://girafdesign.net

project: TALERMAN-SIMON RESIDENCE

client: FLOISAND STUDIO

date: 6.27.18

proj #: 2018-029

sheet: MF-1

B5 (±HD 7.14k)

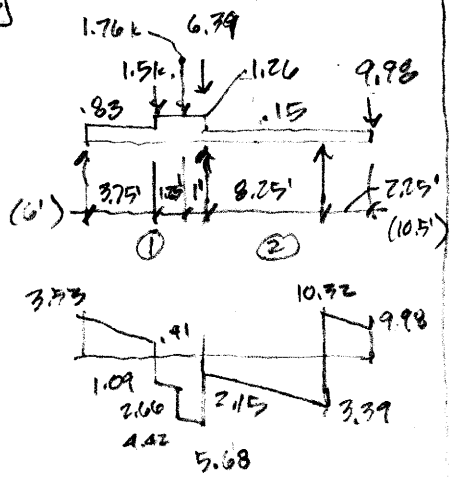

① $M_{MAX} = 7.38$ FT.K.
$V_{MAX} = 5.68$k

② $M_{MAX} = 22.8$ FT.K
$V_{MAX} = 10.32$ FT.K

TRY 5¼x14 PSL

Δ_u @ CANT ONLY = L/580 ✓

B6

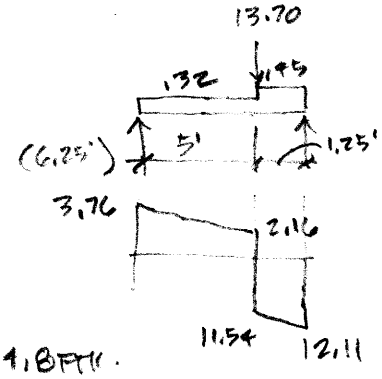

M = 14.8 FT.K.
V = 12.11
5¼x11⅞ PSL
Δ_u FROM CANT BM < L/360
USE 5¼x14 PSL
TO MINIMIZE EFFECT
@ CANT BM.

B7 $l = 3.75'$ M = .59 FT.K
w = .45 V = .72k
(2)2x8

B8 $l = 3.75'$ M = .91 FT.K.
w = .69 klf V = 1.12k.
(2) 2x8

B9 $l = 8.75'$ M = 3.92 FT.K.
w = .41 klf V = 1.79k
TRY 4x10 Δ_{TL} = L/760

B10

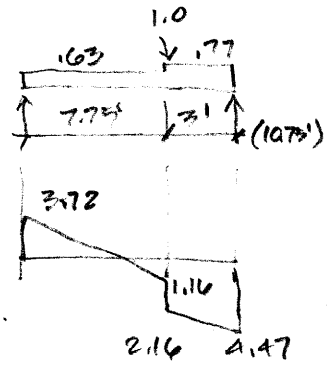

M = 11.0 FT.K.
V = 4.47k.
5¼x14 LSL Δ_{TL} = L/728

B11 $l = 12.5'$ M = 16.2 FT.K
w = .63 klf V = 5.19k.

TRY W8x15
Δ_u = L/375
W8x18

B12

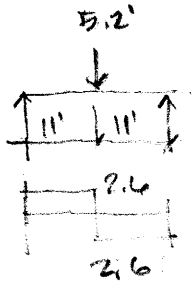

M = 28.6 FT.K.
V = 2.6k.

C15x33.9 ✓
Δ_u < L/1500

B13

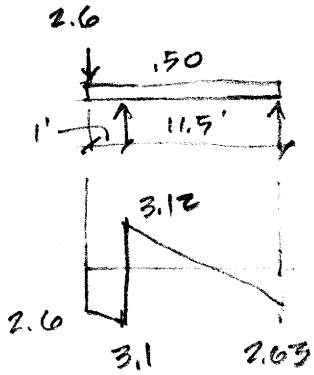

M + MAX = 6.91 FT.K.
M − = 2.85 FT.K.
V_{MAX} = 3.12k.

TRY W6x9
Δ_u = L/416
USE W6x16 Δ_u < L/700

B14 → SEE ME-3

B15

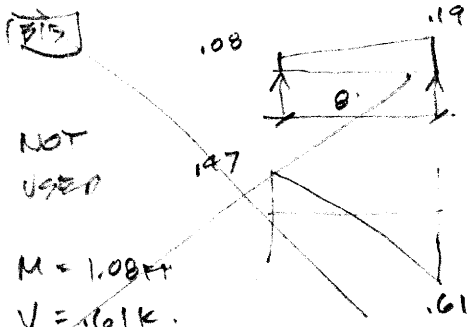

NOT USED

M = 1.08 FT
V = .61k.
4x10 RIP TO SLOPE (7½' MIN)

B16

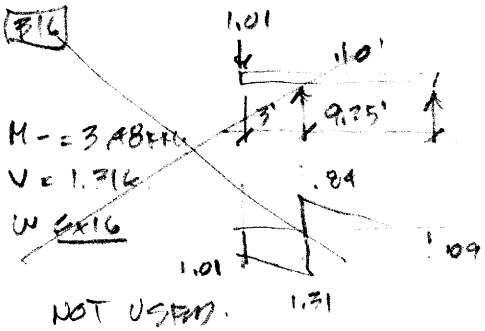

M − = 3.48 FT.K.
V = 1.31k
W 6x16

NOT USED.

giraf design
9220 roosevelt way ne
seattle wa 98115-2842
(206) 621-0060 p
(206) 621-0061 f
girafdesign@gmail.com
http://girafdesign.net

project: TAUERMAN-SIMON RESIDENCE
client: FLOSANO STUDIO

date: 08-14-18
proj #: 2018-024
sheet: ME-2

B17

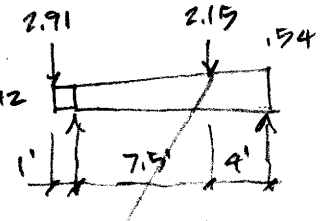

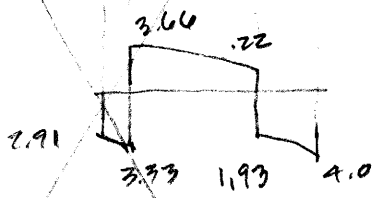

M+ = 8.74 FTK. NOT USED
M− = 3.12 FTK

W6x16

B18

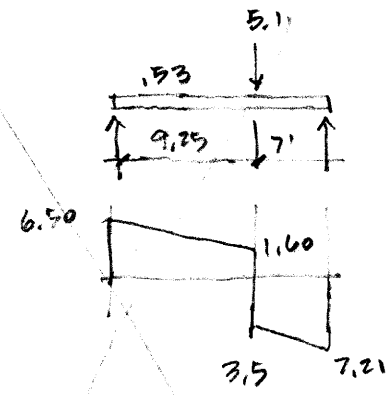

M = 37.5 FT.K. NOT USED
V = 7.21K.
TRY 8 3/4x13.5 GLB
Δu = .32" L/602
USE 10 3/4x13.5 GLB
Δu = .26" L/740

COLUMNS

C1 P MAX = 7.83k
8.67k ←

6x6 fc = 286 psi ✓

C2 P = 6.99k.
C3 P = 6.06k.
} l = 10'
HSS 3x3x3/16

C4 P = 19.21k. (IN COMBINING W/WIND O.T.)

6x6 fc = 635 psi

B14

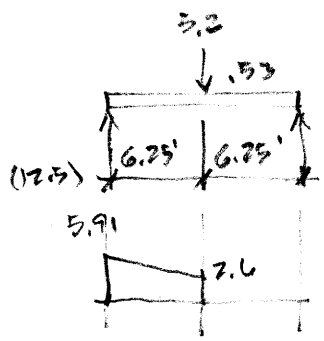

M = 26.6 FTK.
V = 5.91K.
10 3/4x13.5 GLB 7x14 PSL ✓
Δtl = .166" < L/900

B15 l = 6.5'

CASE 1 w = .65 klf
M = 3.43 FTK.
V = 2.11K.

CASE 2 w = .39 klf
P = 3k.
M = 6.93 FTK. 5 1/4x9 1/2 PSL
V = 4.3k.

giraf design
9220 roosevelt way ne
seattle wa 98115-2842
(206) 621-0060 p
(206) 621-0061 f
girafdesign@gmail.com
http://girafdesign.net

project: TALERMAN - SIMON RESIDENCE
client: FLOISAND STUDIO

date: 08-14-18
proj #: 2018-024
sheet: MF-3

FOUNDATIONS

SEE KP-5

SOIL (PER ZIPPER GEO)

* 2,000 PSF BEARING
  35 PCF ACTIVE
  50 PCF AT REST
* 0.35 COEFF OF FRICTION
* 250 PCF PASSIVE
* INCLUDING 1.5 F.O.S.

CONC

$F'_c = 3{,}000$ psi
$F_y = 60$ ksi

FOOTINGS

(F1) $P_{MAX} = 8.67$k
$A_{S\,MIN} = 4.7$ □
2'-6" x 2'-6" x 12"

(F2) $P_{MAX} = 6.99$k.
(F3) $A_{S\,MIN} = 3.78$ □
2'-6" x 2'-0" x 12"

(F4) $P_{MAX} = 19.21$k.
$A_{S\,MIN} = 10.38$ □
3'-6" x 3'-6" x 16"

FOOTINGS @ HOLD-DOWNS

HDQ8 PAB7

$d_e = 8\frac{1}{2}$"
$F = 13$"
∴ D = 14"
B = 2'-2"

HHDQ11 PAP

$d_e = 10\frac{1}{2}$"
F = 16"
∴ D = 16"
B = 2'-8"

WALLS

W1

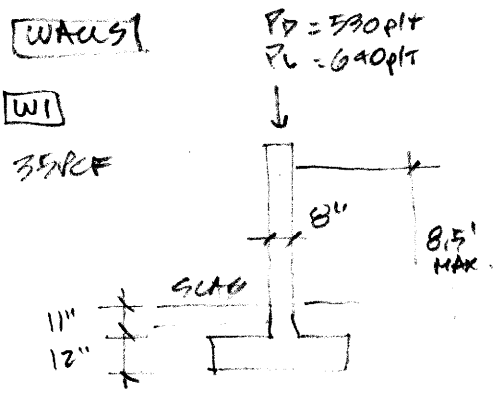

SEE FD-2 & 3

W2 SPANNING HORIZ

$l_{MAX} = 7.33'$
425 PSF MAX
w = 425
$w_u = 680$ plf
$M_u = 4.57$ KFT

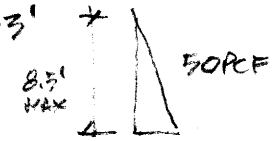

d = 7"
F = .049
∴ $K_n = 93$ ∴ $\rho = 1.33 \times .00176$
∴ $A_s = .196$ #4 @ 12" o.c.

W3

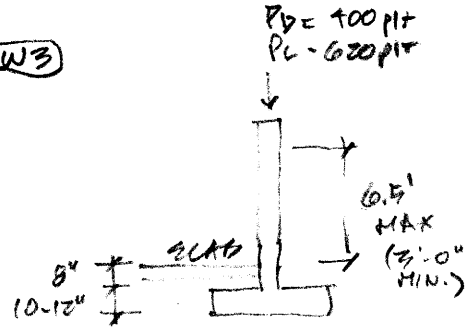

SEE FD-4 & 5 @ HIGHER
& FD-6 & 7 @ LOWER

W4

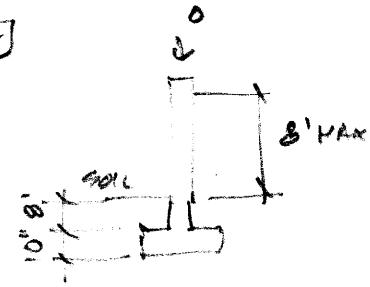

SEE FD-8 & 9 @ H ≤ 8'
FD-10 & 11 @ H ≤ 6'
FD-12 & 13 @ H ≤ 4'

DRIVEWAY RETAINING WALL

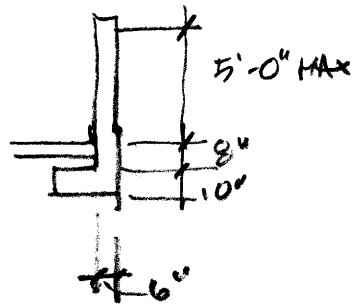

SEE FD-14 & 15 FOR H ≤ 5'
& FD-16 & 17 FOR H ≤ 3'
(& FD-18 – 21 FOR 2H:1V SLOPED BACKFILL)

Δ 10-3-18

giraf design
9220 roosevelt way ne
seattle wa 98115-2842
(206) 621-0060 p
(206) 621-0061 f
girafdesign@gmail.com
http://girafdesign.net

project: TAUERMAN-SIMON RESIDENCE
date: 7-7-18
proj #: 2018.024
client: FLOISAND STUDIO
sheet: FD-1

giraf design
9220 roosevelt way ne
seattle wa 98115-2842
(206) 621-0060
girafdesign@gmail.com

Title **talerman-simon residence** Page: FP-2
Job # **2018-024** Dsgnr: **nic** Date: 7 JUL 2018
Description....
wall W1

This Wall in File: c:\users\nic\documents\retainpro 10 project files\talerman-simon.RPX

RetainPro 10 (c) 1987-2014, Build 10.14.10.31
License : KW-06056085
License To : GIRAF DESIGN

Cantilevered Retaining Wall Design

Code: IBC 2012,ACI 318-11,ACI 530-11

Criteria

Retained Height	=	9.50 ft
Wall height above soil	=	0.67 ft
Slope Behind Wall	=	0.00 : 1
Height of Soil over Toe	=	11.00 in
Water height over heel	=	0.0 ft

Soil Data

Allow Soil Bearing	=	2,000.0 psf
Equivalent Fluid Pressure Method		
Heel Active Pressure	=	35.0 psf/ft
	=	
Passive Pressure	=	375.0 psf/ft
Soil Density, Heel	=	120.00 pcf
Soil Density, Toe	=	0.00 pcf
Footing||Soil Friction	=	0.525
Soil height to ignore for passive pressure	=	12.00 in

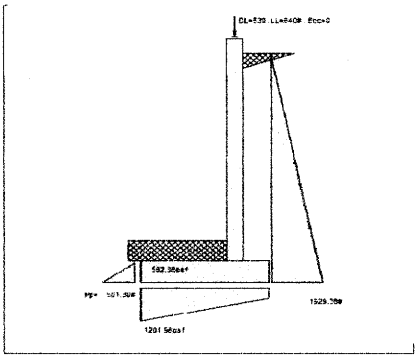

Surcharge Loads

Surcharge Over Heel	=	0.0 psf
Used To Resist Sliding & Overturning		
Surcharge Over Toe	=	0.0 psf
Used for Sliding & Overturning		

Axial Load Applied to Stem

Axial Dead Load	=	530.0 lbs
Axial Live Load	=	640.0 lbs
Axial Load Eccentricity	=	0.0 in

Lateral Load Applied to Stem

Lateral Load	=	0.0 #/ft
...Height to Top	=	0.00 ft
...Height to Bottom	=	0.00 ft
The above lateral load has been increased by a factor of		1.00
Wind on Exposed Stem	=	0.0 psf

Adjacent Footing Load

Adjacent Footing Load	=	0.0 lbs
Footing Width	=	0.00 ft
Eccentricity	=	0.00 in
Wall to Ftg CL Dist	=	0.00 ft
Footing Type		Line Load
Base Above/Below Soil at Back of Wall	=	0.0 ft
Poisson's Ratio	=	0.300

Design Summary

Wall Stability Ratios

Overturning	=	2.11 OK
Sliding	=	1.30 Ratio < 1.5!
Total Bearing Load	=	4,461 lbs
...resultant ecc.	=	3.47 in
Soil Pressure @ Toe	=	1,202 psf OK
Soil Pressure @ Heel	=	582 psf OK
Allowable	=	2,000 psf
Soil Pressure Less Than Allowable		
ACI Factored @ Toe	=	1,511 psf
ACI Factored @ Heel	=	732 psf
Footing Shear @ Toe	=	24.4 psi OK
Footing Shear @ Heel	=	6.5 psi OK
Allowable	=	82.2 psi

Sliding Calcs (Vertical Component NOT Used)

Lateral Sliding Force	=	1,929.4 lbs
less 100% Passive Force	= -	501.3 lbs
less 100% Friction Force	= -	2,005.9 lbs
Added Force Req'd	=	0.0 lbs OK
....for 1.5 : 1 Stability	=	386.8 lbs NG

Load Factors

Building Code	IBC 2012,ACI
Dead Load	1.200
Live Load	1.600
Earth, H	1.600
Wind, W	1.000
Seismic, E	1.000

Stem Construction

		Bottom
		Stem OK
Design Height Above Ftg	ft =	0.00
Wall Material Above "Ht"	=	Concrete
Thickness	=	8.00
Rebar Size	=	# 5
Rebar Spacing	=	10.00
Rebar Placed at	=	Edge

Design Data

fb/FB + fa/Fa	=	0.821
Total Force @ Section	lbs =	2,527.0
Moment....Actual	ft-# =	8,002.2
Moment.....Allowable	=	9,745.5
Shear.....Actual	psi =	34.0
Shear.....Allowable	psi =	82.2
Wall Weight	=	100.0
Rebar Depth 'd'	in =	6.19

Masonry Data

f'm	psi =	
Fs	psi =	
Solid Grouting	=	
Modular Ratio 'n'	=	
Short Term Factor	=	
Equiv. Solid Thick.	=	
Masonry Block Type	=	Medium Weight
Masonry Design Method	=	ASD

Concrete Data

f'c	psi =	3,000.0
Fy	psi =	60,000.0

giraf design
9220 roosevelt way ne
seattle wa 98115-2842
(206) 621-0060
girafdesign@gmail.com

Title talerman-simon residence
Job # 2018-024 Dsgnr: nic
Description....
wall W1

Date: 7 JUL 2018

This Wall in File: c:\users\nic\documents\retainpro 10 project files\talerman-simon.RPX

RetainPro 10 (c) 1987-2014, Build 10.14.10.31
License : KW-06056085
License To : GIRAF DESIGN

Cantilevered Retaining Wall Design

Code: IBC 2012,ACI 318-11,ACI 530-11

Footing Dimensions & Strengths

Toe Width	=	3.33 ft
Heel Width	=	1.67
Total Footing Width	=	5.00
Footing Thickness	=	12.00 in
Key Width	=	0.00 in
Key Depth	=	0.00 in
Key Distance from Toe	=	0.00 ft

f'c = 3,000 psi Fy = 60,000 psi
Footing Concrete Density = 150.00 pcf
Min. As % = 0.0018
Cover @ Top 2.00 @ Btm.= 3.00 in

Footing Design Results

		Toe	Heel
Factored Pressure	=	1,511	732 psf
Mu' : Upward	=	7,421	395 ft-#
Mu' : Downward	=	687	779 ft-#
Mu: Design	=	6,733	384 ft-#
Actual 1-Way Shear	=	24.45	6.49 psi
Allow 1-Way Shear	=	82.16	82.16 psi

Toe Reinforcing = # 5 @ 10.00 in
Heel Reinforcing = None Spec'd
Key Reinforcing = None Spec'd

Other Acceptable Sizes & Spacings

Toe: #4@ 9.26 in, #5@ 14.35 in, #6@ 20.37 in, #7@ 27.78 in, #8@ 36.57 in, #9@ 46
Heel: Not req'd, Mu < S * Fr
Key: No key defined

Summary of Overturning & Resisting Forces & Moments

Item		.....OVERTURNING..... Force lbs	Distance ft	Moment ft-#
Heel Active Pressure	=	1,929.4	3.50	6,752.8
Surcharge over Heel	=			
Surcharge Over Toe	=			
Adjacent Footing Load	=			
Added Lateral Load	=			
Load @ Stem Above Soil	=			
	=			
Total		1,929.4	**O.T.M.**	6,752.8
	=		=	

Resisting/Overturning Ratio = **2.11**
Vertical Loads used for Soil Pressure = 4,460.8 lbs

		.....RESISTING..... Force lbs	Distance ft	Moment ft-#
Soil Over Heel	=	1,143.8	4.50	5,145.2
Sloped Soil Over Heel	=			
Surcharge Over Heel	=			
Adjacent Footing Load	=			
Axial Dead Load on Stem	=	530.0	3.66	1,941.6
* Axial Live Load on Stem	=	640.0	3.66	2,344.5
Soil Over Toe	=		1.67	
Surcharge Over Toe	=			
Stem Weight(s)	=	1,017.0	3.66	3,725.6
Earth @ Stem Transitions	=	380.0	4.16	1,582.1
Footing Weight	=	750.0	2.50	1,875.0
Key Weight	=			
Vert. Component	=			
Total =		3,820.8 lbs	**R.M.=**	14,269.4

* Axial live load NOT included in total displayed, or used for overturning resistance, but is included for soil pressure calculation.

Tilt

Horizontal Deflection at Top of Wall due to settlement of soil

(Deflection due to wall bending not considered)

Soil Spring Reaction Modulus 250.0 pci
Horizontal Defl @ Top of Wall (approximate only) 0.068 in

The above calculation is not valid if the heel soil bearing pressure exceeds that of the toe, because the wall would then tend to rotate into the retained soil.

giraf design
9220 roosevelt way ne
seattle wa 98115-2842
(206) 621-0060
girafdesign@gmail.com

Title **talerman-simon residence** Page: FD-4
Job # **2018-024** Dsgnr: **nic** Date: 7 JUL 2018
Description....
wall W3

This Wall in File: c:\users\nic\documents\retainpro 10 project files\talerman-simon.RPX

RetainPro 10 (c) 1987-2014, Build 10.14.10.31
License : KW-06056085
License To : GIRAF DESIGN

Cantilevered Retaining Wall Design

Code: IBC 2012,ACI 318-11,ACI 530-11

Criteria

Retained Height	=	7.25 ft
Wall height above soil	=	2.50 ft
Slope Behind Wall	=	0.00 : 1
Height of Soil over Toe	=	8.00 in
Water height over heel	=	0.0 ft

Soil Data

Allow Soil Bearing	=	2,000.0 psf
Equivalent Fluid Pressure Method		
Heel Active Pressure	=	35.0 psf/ft
	=	
Passive Pressure	=	375.0 psf/ft
Soil Density, Heel	=	120.00 pcf
Soil Density, Toe	=	0.00 pcf
Footing||Soil Friction	=	0.525
Soil height to ignore for passive pressure	=	12.00 in

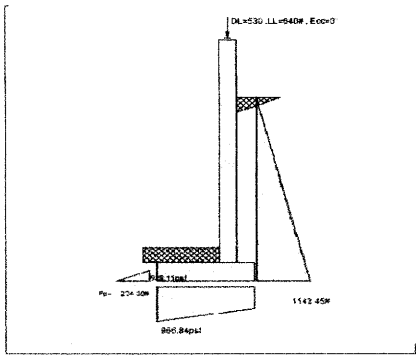

Surcharge Loads

Surcharge Over Heel	=	0.0 psf
Used To Resist Sliding & Overturning		
Surcharge Over Toe	=	0.0 psf
Used for Sliding & Overturning		

Axial Load Applied to Stem

Axial Dead Load	=	530.0 lbs
Axial Live Load	=	640.0 lbs
Axial Load Eccentricity	=	0.0 in

Lateral Load Applied to Stem

Lateral Load	=	0.0 #/ft
...Height to Top	=	0.00 ft
...Height to Bottom	=	0.00 ft
The above lateral load has been increased by a factor of		1.00
Wind on Exposed Stem	=	0.0 psf

Adjacent Footing Load

Adjacent Footing Load	=	0.0 lbs
Footing Width	=	0.00 ft
Eccentricity	=	0.00 in
Wall to Ftg CL Dist	=	0.00 ft
Footing Type		Line Load
Base Above/Below Soil at Back of Wall	=	0.0 ft
Poisson's Ratio	=	0.300

Design Summary

Wall Stability Ratios

Overturning	=	2.49	OK
Sliding	=	1.50	OK
Total Bearing Load	=	3,470 lbs	
...resultant ecc.	=	0.15 in	
Soil Pressure @ Toe	=	967 psf	OK
Soil Pressure @ Heel	=	929 psf	OK
Allowable	=	2,000 psf	
Soil Pressure Less Than Allowable			
ACI Factored @ Toe	=	1,232 psf	
ACI Factored @ Heel	=	1,183 psf	
Footing Shear @ Toe	=	21.6 psi	OK
Footing Shear @ Heel	=	0.0 psi	OK
Allowable	=	82.2 psi	

Sliding Calcs (Vertical Component NOT Used)

Lateral Sliding Force	=	1,143.5 lbs	
less 100% Passive Force	= -	234.4 lbs	
less 100% Friction Force	= -	1,485.5 lbs	
Added Force Req'd	=	0.0 lbs	OK
....for 1.5 : 1 Stability	=	0.0 lbs	OK

Load Factors

Building Code	IBC 2012,ACI
Dead Load	1.200
Live Load	1.600
Earth, H	1.600
Wind, W	1.000
Seismic, E	1.000

Stem Construction

		Bottom
Design Height Above Ftg	ft =	Stem OK 0.00
Wall Material Above "Ht"	=	Concrete
Thickness	=	8.00
Rebar Size	=	# 4
Rebar Spacing	=	10.00
Rebar Placed at	=	Edge

Design Data

fb/FB + fa/Fa	=	**0.548**
Total Force @ Section	lbs =	1,471.8
Moment....Actual	ft-# =	3,556.7
Moment.....Allowable	=	6,495.1
Shear.....Actual	psi =	19.6
Shear.....Allowable	psi =	82.2
Wall Weight	=	100.0
Rebar Depth 'd'	in =	6.25

Masonry Data

f'm	psi =	
Fs	psi =	
Solid Grouting	=	
Modular Ratio 'n'	=	
Short Term Factor	=	
Equiv. Solid Thick.	=	
Masonry Block Type	=	Medium Weight
Masonry Design Method	=	ASD

Concrete Data

f'c	psi =	3,000.0
Fy	psi =	60,000.0

giraf design
9220 roosevelt way ne
seattle wa 98115-2842
(206) 621-0060
girafdesign@gmail.com

Title talerman-simon residence
Job # 2018-024 Dsgnr: nic
Description....
wall W3

Date: 7 JUL 2018

This Wall in File: c:\users\nic\documents\retainpro 10 project files\talerman-simon.RPX

RetainPro 10 (c) 1987-2014, Build 10.14.10.31
License : KW-06056085
License To : GIRAF DESIGN

Cantilevered Retaining Wall Design

Code: IBC 2012,ACI 318-11,ACI 530-11

Footing Dimensions & Strengths

Toe Width	=	2.33 ft
Heel Width	=	1.33
Total Footing Width	=	3.66
Footing Thickness	=	10.00 in
Key Width	=	0.00 in
Key Depth	=	0.00 in
Key Distance from Toe	=	0.00 ft

f'c = 3,000 psi Fy = 60,000 psi
Footing Concrete Density = 150.00 pcf
Min. As % = 0.0018
Cover @ Top 2.00 @ Btm.= 3.00 in

Footing Design Results

		Toe	Heel	
Factored Pressure	=	1,232	1,183	psf
Mu' : Upward	=	3,315	261	ft-#
Mu' : Downward	=	288	263	ft-#
Mu: Design	=	3,028	2	ft-#
Actual 1-Way Shear	=	21.59	0.05	psi
Allow 1-Way Shear	=	82.16	82.16	psi

Toe Reinforcing = # 4 @ 10.00 in
Heel Reinforcing = None Spec'd
Key Reinforcing = None Spec'd

Other Acceptable Sizes & Spacings

Toe: #4@ 11.11 in, #5@ 17.22 in, #6@ 24.44 in, #7@ 33.33 in, #8@ 43.89 in, #9@ 5
Heel: Not req'd, Mu < S * Fr
Key: No key defined

Summary of Overturning & Resisting Forces & Moments

Item		.....OVERTURNING..... Force lbs	Distance ft	Moment ft-#
Heel Active Pressure	=	1,143.5	2.69	3,081.0
Surcharge over Heel	=			
Surcharge Over Toe	=			
Adjacent Footing Load	=			
Added Lateral Load	=			
Load @ Stem Above Soil	=			
	=			
Total		1,143.5	**O.T.M.**	3,081.0
	=		=	

Resisting/Overturning Ratio = **2.49**
Vertical Loads used for Soil Pressure = 3,469.6 lbs

		.....RESISTING..... Force lbs	Distance ft	Moment ft-#
Soil Over Heel	=	577.1	3.33	1,920.8
Sloped Soil Over Heel	=			
Surcharge Over Heel	=			
Adjacent Footing Load	=			
Axial Dead Load on Stem	=	530.0	2.66	1,411.6
* Axial Live Load on Stem	=	640.0	2.66	1,704.5
Soil Over Toe	=		1.17	
Surcharge Over Toe	=			
Stem Weight(s)	=	975.0	2.66	2,596.8
Earth @ Stem Transitions	=	290.0	3.16	917.4
Footing Weight	=	457.5	1.83	837.2
Key Weight	=			
Vert. Component	=			
Total =		2,829.6 lbs	**R.M.=**	7,683.7

* Axial live load NOT included in total displayed, or used for overturning resistance, but is included for soil pressure calculation.

Tilt

Horizontal Deflection at Top of Wall due to settlement of soil

(Deflection due to wall bending not considered)

Soil Spring Reaction Modulus 250.0 pci
Horizontal Defl @ Top of Wall (approximate only) 0.072 in

The above calculation is not valid if the heel soil bearing pressure exceeds that of the toe, because the wall would then tend to rotate into the retained soil.

giraf design
9220 roosevelt way ne
seattle wa 98115-2842
(206) 621-0060
girafdesign@gmail.com

Title talerman-simon residence
Job # 2018-024 Dsgnr: nic
Description....
wall W3

Date: 7 JUL 2018

This Wall in File: c:\users\nic\documents\retainpro 10 project files\talerman-simon.RPX

RetainPro 10 (c) 1987-2014, Build 10.14.10.31
License : KW-06056085
License To : GIRAF DESIGN

Cantilevered Retaining Wall Design

Code: IBC 2012,ACI 318-11,ACI 530-11

Criteria

Retained Height	=	4.67 ft
Wall height above soil	=	5.00 ft
Slope Behind Wall	=	0.00 : 1
Height of Soil over Toe	=	8.00 in
Water height over heel	=	0.0 ft

Soil Data

Allow Soil Bearing	=	2,000.0 psf
Equivalent Fluid Pressure Method		
Heel Active Pressure	=	35.0 psf/ft
	=	
Passive Pressure	=	375.0 psf/ft
Soil Density, Heel	=	120.00 pcf
Soil Density, Toe	=	0.00 pcf
Footing||Soil Friction	=	0.525
Soil height to ignore for passive pressure	=	12.00 in

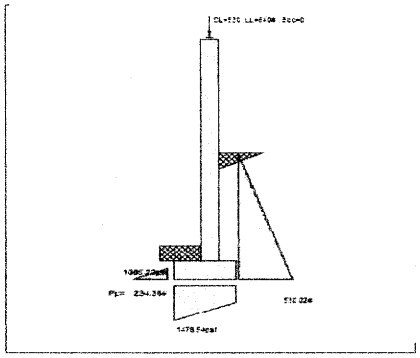

Surcharge Loads

Surcharge Over Heel	=	0.0 psf
Used To Resist Sliding & Overturning		
Surcharge Over Toe	=	0.0 psf
Used for Sliding & Overturning		

Lateral Load Applied to Stem

Lateral Load	=	0.0 #/ft
...Height to Top	=	0.00 ft
...Height to Bottom	=	0.00 ft
The above lateral load has been increased by a factor of		1.00
Wind on Exposed Stem	=	0.0 psf

Adjacent Footing Load

Adjacent Footing Load	=	0.0 lbs
Footing Width	=	0.00 ft
Eccentricity	=	0.00 in
Wall to Ftg CL Dist	=	0.00 ft
Footing Type		Line Load
Base Above/Below Soil at Back of Wall	=	0.0 ft
Poisson's Ratio	=	0.300

Axial Load Applied to Stem

Axial Dead Load	=	530.0 lbs
Axial Live Load	=	640.0 lbs
Axial Load Eccentricity	=	0.0 in

Design Summary

Wall Stability Ratios

Overturning	=	3.52	OK
Sliding	=	2.77	OK
Total Bearing Load	=	2,987 lbs	
...resultant ecc.	=	0.71 in	
Soil Pressure @ Toe	=	1,479 psf	OK
Soil Pressure @ Heel	=	1,085 psf	OK
Allowable	=	2,000 psf	
Soil Pressure Less Than Allowable			
ACI Factored @ Toe	=	1,901 psf	
ACI Factored @ Heel	=	1,395 psf	
Footing Shear @ Toe	=	9.2 psi	OK
Footing Shear @ Heel	=	4.8 psi	OK
Allowable	=	82.2 psi	

Sliding Calcs (Vertical Component NOT Used)

Lateral Sliding Force	=	530.0 lbs	
less 100% Passive Force	= -	234.4 lbs	
less 100% Friction Force	= -	1,232.1 lbs	
Added Force Req'd	=	0.0 lbs	OK
....for 1.5 : 1 Stability	=	0.0 lbs	OK

Load Factors

Building Code	IBC 2012,ACI
Dead Load	1.200
Live Load	1.600
Earth, H	1.600
Wind, W	1.000
Seismic, E	1.000

Stem Construction

Bottom

		As < Min %
Design Height Above Ftg	ft =	0.00
Wall Material Above "Ht"	=	Concrete
Thickness	=	8.00
Rebar Size	=	# 4
Rebar Spacing	=	18.00
Rebar Placed at	=	Center

Design Data

fb/FB + fa/Fa	=	No Good
Total Force @ Section	lbs =	610.6
Moment....Actual	ft-# =	950.6
Moment.....Allowable	=	2,321.3
Shear.....Actual	psi =	12.7
Shear.....Allowable	psi =	82.2
Wall Weight	=	100.0
Rebar Depth 'd'	in =	4.00

Masonry Data

f'm	psi =	
Fs	psi =	
Solid Grouting	=	
Modular Ratio 'n'	=	
Short Term Factor	=	
Equiv. Solid Thick.	=	
Masonry Block Type	=	Medium Weight
Masonry Design Method	=	ASD

Concrete Data

f'c	psi =	3,000.0
Fy	psi =	60,000.0

giraf design
9220 roosevelt way ne
seattle wa 98115-2842
(206) 621-0060
girafdesign@gmail.com

Title **talerman-simon residence**
Job # **2018-024** Dsgnr: **nic**
Description....
wall W3

Date: 7 JUL 2018

This Wall in File: c:\users\nic\documents\retainpro 10 project files\talerman-simon.RPX

RetainPro 10 (c) 1987-2014, Build 10.14.10.31
License : KW-06056085
License To : GIRAF DESIGN

Cantilevered Retaining Wall Design

Code: IBC 2012,ACI 318-11,ACI 530-11

Footing Dimensions & Strengths

Toe Width	=	1.00 ft
Heel Width	=	1.33
Total Footing Width	=	2.33
Footing Thickness	=	10.00 in
Key Width	=	0.00 in
Key Depth	=	0.00 in
Key Distance from Toe	=	0.00 ft

f'c = 3,000 psi Fy = 60,000 psi
Footing Concrete Density = 150.00 pcf
Min. As % = 0.0018
Cover @ Top 2.00 @ Btm.= 3.00 in

Footing Design Results

		Toe	Heel	
Factored Pressure	=	1,901	1,395	psf
Mu' : Upward	=	914	318	ft-#
Mu' : Downward	=	40	181	ft-#
Mu: Design	=	874	-137	ft-#
Actual 1-Way Shear	=	9.24	4.75	psi
Allow 1-Way Shear	=	82.16	82.16	psi

Toe Reinforcing = # 4 @ 10.00 in
Heel Reinforcing = None Spec'd
Key Reinforcing = None Spec'd

Other Acceptable Sizes & Spacings
Toe: Not req'd, Mu < S * Fr
Heel: Not req'd, Mu < S * Fr
Key: No key defined

Summary of Overturning & Resisting Forces & Moments

Item		.....OVERTURNING..... Force lbs	Distance ft	Moment ft-#
Heel Active Pressure	=	530.0	1.83	972.3
Surcharge over Heel	=			
Surcharge Over Toe	=			
Adjacent Footing Load	=			
Added Lateral Load	=			
Load @ Stem Above Soil	=			
	=			
Total		530.0	**O.T.M.**	972.3
	=		=	

Resisting/Overturning Ratio = **3.52**
Vertical Loads used for Soil Pressure = 2,986.8 lbs

		.....RESISTING..... Force lbs	Distance ft	Moment ft-#
Soil Over Heel	=	371.7	2.00	742.8
Sloped Soil Over Heel	=			
Surcharge Over Heel	=			
Adjacent Footing Load	=			
Axial Dead Load on Stem	=	530.0	1.33	706.7
* Axial Live Load on Stem	=	640.0	1.33	853.3
Soil Over Toe	=		0.50	
Surcharge Over Toe	=			
Stem Weight(s)	=	967.0	1.33	1,289.3
Earth @ Stem Transitions	=	186.8	1.83	342.5
Footing Weight	=	291.3	1.17	339.3
Key Weight	=			
Vert. Component	=			
	Total =	2,346.8 lbs	**R.M.=**	3,420.6

* Axial live load NOT included in total displayed, or used for overturning resistance, but is included for soil pressure calculation.

Tilt

Horizontal Deflection at Top of Wall due to settlement of soil

(Deflection due to wall bending not considered)

Soil Spring Reaction Modulus 250.0 pci
Horizontal Defl @ Top of Wall (approximate only) 0.170 in

The above calculation is not valid if the heel soil bearing pressure exceeds that of the toe, because the wall would then tend to rotate into the retained soil.

giraf design
9220 roosevelt way ne
seattle wa 98115-2842
(206) 621-0060
girafdesign@gmail.com

Title talerman-simon residence
Job # 2018-024 Dsgnr: nic
Description....
wall W4

Date: 9 JUL 2018

This Wall in File: c:\users\nic\documents\retainpro 10 project files\talerman-simon.RPX

RetainPro 10 (c) 1987-2014, Build 10.14.10.31
License : KW-06056085
License To : GIRAF DESIGN

Cantilevered Retaining Wall Design

Code: IBC 2012,ACI 318-11,ACI 530-11

Criteria

Retained Height	=	8.67 ft
Wall height above soil	=	2.50 ft
Slope Behind Wall	=	0.00 : 1
Height of Soil over Toe	=	8.00 in
Water height over heel	=	0.0 ft

Soil Data

Allow Soil Bearing	=	2,000.0 psf
Equivalent Fluid Pressure Method		
Heel Active Pressure	=	35.0 psf/ft
	=	
Passive Pressure	=	375.0 psf/ft
Soil Density, Heel	=	120.00 pcf
Soil Density, Toe	=	0.00 pcf
Footing||Soil Friction	=	0.525
Soil height to ignore for passive pressure	=	12.00 in

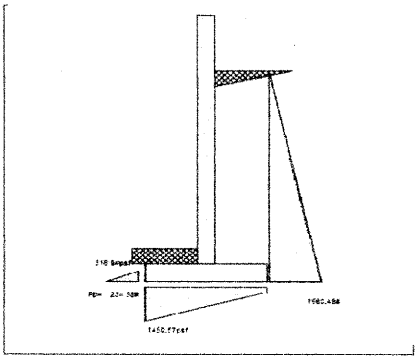

Surcharge Loads

Surcharge Over Heel	=	0.0 psf
Used To Resist Sliding & Overturning		
Surcharge Over Toe	=	0.0 psf
Used for Sliding & Overturning		

Axial Load Applied to Stem

Axial Dead Load	=	0.0 lbs
Axial Live Load	=	0.0 lbs
Axial Load Eccentricity	=	0.0 in

Lateral Load Applied to Stem

Lateral Load	=	0.0 #/ft
...Height to Top	=	0.00 ft
...Height to Bottom	=	0.00 ft
The above lateral load has been increased by a factor of		1.00
Wind on Exposed Stem	=	0.0 psf

Adjacent Footing Load

Adjacent Footing Load	=	0.0 lbs
Footing Width	=	0.00 ft
Eccentricity	=	0.00 in
Wall to Ftg CL Dist	=	0.00 ft
Footing Type		Line Load
Base Above/Below Soil at Back of Wall	=	0.0 ft
Poisson's Ratio	=	0.300

Design Summary

Wall Stability Ratios

Overturning	=	2.52	OK
Sliding	=	1.52	OK
Total Bearing Load	=	4,132 lbs	
...resultant ecc.	=	5.97 in	
Soil Pressure @ Toe	=	1,451 psf	OK
Soil Pressure @ Heel	=	319 psf	OK
Allowable	=	2,000 psf	
Soil Pressure Less Than Allowable			
ACI Factored @ Toe	=	1,741 psf	
ACI Factored @ Heel	=	383 psf	
Footing Shear @ Toe	=	23.4 psi	OK
Footing Shear @ Heel	=	16.1 psi	OK
Allowable	=	82.2 psi	

Sliding Calcs (Vertical Component NOT Used)

Lateral Sliding Force	=	1,580.5 lbs	
less 100% Passive Force	= -	234.4 lbs	
less 100% Friction Force	= -	2,169.2 lbs	
Added Force Req'd	=	0.0 lbs	OK
....for 1.5 : 1 Stability	=	0.0 lbs	OK

Load Factors

Building Code	IBC 2012,ACI
Dead Load	1.200
Live Load	1.600
Earth, H	1.600
Wind, W	1.000
Seismic, E	1.000

Stem Construction

Bottom

		Stem OK
Design Height Above Ftg	ft =	0.00
Wall Material Above "Ht"	=	Concrete
Thickness	=	8.00
Rebar Size	=	# 5
Rebar Spacing	=	10.00
Rebar Placed at	=	Edge

Design Data

fb/FB + fa/Fa	=	**0.624**
Total Force @ Section	lbs =	2,104.7
Moment....Actual	ft-# =	6,082.7
Moment.....Allowable	=	9,745.5
Shear.....Actual	psi =	28.3
Shear.....Allowable	psi =	82.2
Wall Weight	=	100.0
Rebar Depth 'd'	in =	6.19

Masonry Data

f'm	psi =	
Fs	psi =	
Solid Grouting	=	
Modular Ratio 'n'	=	
Short Term Factor	=	
Equiv. Solid Thick.	=	
Masonry Block Type	=	Medium Weight
Masonry Design Method	=	ASD

Concrete Data

f'c	psi =	3,000.0
Fy	psi =	60,000.0

giraf design
9220 roosevelt way ne
seattle wa 98115-2842
(206) 621-0060
girafdesign@gmail.com

Title talerman-simon residence
Job # 2018-024 Dsgnr: nic
Description....
wall W4

Date: 9 JUL 2018

This Wall in File: c:\users\nic\documents\retainpro 10 project files\talerman-simon.RPX

RetainPro 10 (c) 1987-2014, Build 10.14.10.31
License : KW-06056085
License To : GIRAF DESIGN

Cantilevered Retaining Wall Design

Code: IBC 2012,ACI 318-11,ACI 530-11

Footing Dimensions & Strengths

Toe Width	=	2.00 ft
Heel Width	=	2.67
Total Footing Width	=	4.67
Footing Thickness	=	10.00 in
Key Width	=	0.00 in
Key Depth	=	0.00 in
Key Distance from Toe	=	0.00 ft

f'c = 3,000 psi Fy = 60,000 psi
Footing Concrete Density = 150.00 pcf
Min. As % = 0.0018
Cover @ Top 2.00 @ Btm.= 3.00 in

Footing Design Results

		Toe	Heel	
Factored Pressure	=	1,741	383	psf
Mu' : Upward	=	3,094	1,158	ft-#
Mu' : Downward	=	494	2,806	ft-#
Mu: Design	=	2,600	1,649	ft-#
Actual 1-Way Shear	=	23.38	16.13	psi
Allow 1-Way Shear	=	82.16	82.16	psi

Toe Reinforcing = # 5 @ 17.22 in
Heel Reinforcing = None Spec'd
Key Reinforcing = None Spec'd

Other Acceptable Sizes & Spacings
Toe: #4@ 11.11 in, #5@ 17.22 in, #6@ 24.44 in, #7@ 33.33 in, #8@ 43.89 in, #9@ 5
Heel: Not req'd, Mu < S * Fr
Key: No key defined

Summary of Overturning & Resisting Forces & Moments

Item		.....OVERTURNING..... Force lbs	Distance ft	Moment ft-#
Heel Active Pressure	=	1,580.5	3.17	5,006.6
Surcharge over Heel	=			
Surcharge Over Toe	=			
Adjacent Footing Load	=			
Added Lateral Load	=			
Load @ Stem Above Soil	=			
	=			
Total		1,580.5	**O.T.M.**	5,006.6
	=		=	

Resisting/Overturning Ratio = **2.52**
Vertical Loads used for Soil Pressure = 4,131.8 lbs

		.....RESISTING..... Force lbs	Distance ft	Moment ft-#
Soil Over Heel	=	2,084.3	3.67	7,645.8
Sloped Soil Over Heel	=			
Surcharge Over Heel	=			
Adjacent Footing Load	=			
Axial Dead Load on Stem	=			
* Axial Live Load on Stem	=			
Soil Over Toe	=		1.00	
Surcharge Over Toe	=			
Stem Weight(s)	=	1,117.0	2.33	2,606.3
Earth @ Stem Transitions	=	346.8	2.83	982.6
Footing Weight	=	583.8	2.34	1,363.1
Key Weight	=			
Vert. Component	=			
Total =		4,131.8 lbs	**R.M.=**	12,597.8

* Axial live load NOT included in total displayed, or used for overturning resistance, but is included for soil pressure calculation.

Tilt

Horizontal Deflection at Top of Wall due to settlement of soil

(Deflection due to wall bending not considered)

Soil Spring Reaction Modulus 250.0 pci
Horizontal Defl @ Top of Wall (approximate only) 0.096 in

The above calculation is not valid if the heel soil bearing pressure exceeds that of the toe, because the wall would then tend to rotate into the retained soil.

giraf design
9220 roosevelt way ne
seattle wa 98115-2842
(206) 621-0060
girafdesign@gmail.com

Title **talerman-simon residence** Page: FD-10
Job # **2018-024** Dsgnr: **nic** Date: 7 JUL 2018
Description....
wall W4

This Wall in File: c:\users\nic\documents\retainpro 10 project files\talerman-simon.RPX

RetainPro 10 (c) 1987-2014, Build 10.14.10.31
License : KW-06056085
License To : GIRAF DESIGN

Cantilevered Retaining Wall Design

Code: IBC 2012,ACI 318-11,ACI 530-11

Criteria

Retained Height	=	6.67 ft
Wall height above soil	=	2.50 ft
Slope Behind Wall	=	0.00 : 1
Height of Soil over Toe	=	8.00 in
Water height over heel	=	0.0 ft

Soil Data

Allow Soil Bearing	=	2,000.0 psf
Equivalent Fluid Pressure Method		
Heel Active Pressure	=	35.0 psf/ft
	=	
Passive Pressure	=	375.0 psf/ft
Soil Density, Heel	=	120.00 pcf
Soil Density, Toe	=	0.00 pcf
Footing||Soil Friction	=	0.525
Soil height to ignore for passive pressure	=	12.00 in

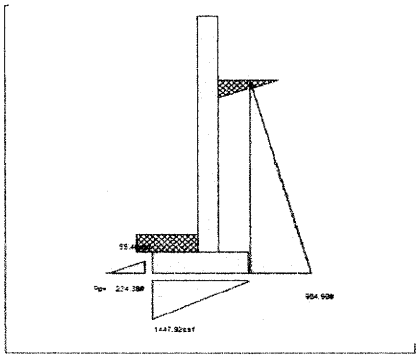

Surcharge Loads

Surcharge Over Heel	=	0.0 psf
Used To Resist Sliding & Overturning		
Surcharge Over Toe	=	0.0 psf
Used for Sliding & Overturning		

Axial Load Applied to Stem

Axial Dead Load	=	0.0 lbs
Axial Live Load	=	0.0 lbs
Axial Load Eccentricity	=	0.0 in

Lateral Load Applied to Stem

Lateral Load	=	0.0 #/ft
...Height to Top	=	0.00 ft
...Height to Bottom	=	0.00 ft
The above lateral load has been increased by a factor of		1.00
Wind on Exposed Stem	=	0.0 psf

Adjacent Footing Load

Adjacent Footing Load	=	0.0 lbs
Footing Width	=	0.00 ft
Eccentricity	=	0.00 in
Wall to Ftg CL Dist	=	0.00 ft
Footing Type		Line Load
Base Above/Below Soil at Back of Wall	=	0.0 ft
Poisson's Ratio	=	0.300

Design Summary

Wall Stability Ratios

Overturning	=	2.06	OK
Sliding	=	1.51	OK
Total Bearing Load	=	2,383 lbs	
...resultant ecc.	=	5.87 in	
Soil Pressure @ Toe	=	1,448 psf	OK
Soil Pressure @ Heel	=	55 psf	OK
Allowable	=	2,000 psf	
Soil Pressure Less Than Allowable			
ACI Factored @ Toe	=	1,738 psf	
ACI Factored @ Heel	=	67 psf	
Footing Shear @ Toe	=	14.8 psi	OK
Footing Shear @ Heel	=	8.7 psi	OK
Allowable	=	82.2 psi	

Sliding Calcs (Vertical Component NOT Used)

Lateral Sliding Force	=	985.0 lbs	
less 100% Passive Force	= -	234.4 lbs	
less 100% Friction Force	= -	1,251.0 lbs	
Added Force Req'd	=	0.0 lbs	OK
....for 1.5 : 1 Stability	=	0.0 lbs	OK

Load Factors

Building Code	IBC 2012,ACI
Dead Load	1.200
Live Load	1.600
Earth, H	1.600
Wind, W	1.000
Seismic, E	1.000

Stem Construction

Bottom

			As < Min %
Design Height Above Ftg	ft =		0.00
Wall Material Above "Ht"	=		Concrete
Thickness	=		8.00
Rebar Size	=		# 4
Rebar Spacing	=		16.00
Rebar Placed at	=		Edge

Design Data

fb/FB + fa/Fa	=	**No Good**
Total Force @ Section	lbs =	1,245.3
Moment....Actual	ft-# =	2,768.3
Moment.....Allowable	=	4,119.2
Shear.....Actual	psi =	16.6
Shear.....Allowable	psi =	82.2
Wall Weight	=	100.0
Rebar Depth 'd'	in =	6.25

Masonry Data

f'm	psi =	
Fs	psi =	
Solid Grouting	=	
Modular Ratio 'n'	=	
Short Term Factor	=	
Equiv. Solid Thick.	=	
Masonry Block Type	=	Medium Weight
Masonry Design Method	=	ASD

Concrete Data

f'c	psi =	3,000.0
Fy	psi =	60,000.0

giraf design
9220 roosevelt way ne
seattle wa 98115-2842
(206) 621-0060
girafdesign@gmail.com

Title talerman-simon residence
Job # 2018-024 Dsgnr: nic
Description....
wall W4

Date: 7 JUL 2018

This Wall in File: c:\users\nic\documents\retainpro 10 project files\talerman-simon.RPX

RetainPro 10 (c) 1987-2014, Build 10.14.10.31
License : KW-06056085
License To : GIRAF DESIGN

Cantilevered Retaining Wall Design

Code: IBC 2012,ACI 318-11,ACI 530-11

Footing Dimensions & Strengths

Toe Width	=	1.50 ft
Heel Width	=	1.67
Total Footing Width	=	3.17
Footing Thickness	=	10.00 in
Key Width	=	0.00 in
Key Depth	=	0.00 in
Key Distance from Toe	=	0.00 ft

f'c = 3,000 psi Fy = 60,000 psi
Footing Concrete Density = 150.00 pcf
Min. As % = 0.0018
Cover @ Top 2.00 @ Btm.= 3.00 in

Footing Design Results

		Toe	Heel
Factored Pressure	=	1,738	67 psf
Mu' : Upward	=	1,658	122 ft-#
Mu' : Downward	=	93	559 ft-#
Mu: Design	=	1,565	437 ft-#
Actual 1-Way Shear	=	14.83	8.69 psi
Allow 1-Way Shear	=	82.16	82.16 psi

Toe Reinforcing = # 4 @ 16.00 in
Heel Reinforcing = None Spec'd
Key Reinforcing = None Spec'd

Other Acceptable Sizes & Spacings
Toe: Not req'd, Mu < S * Fr
Heel: Not req'd, Mu < S * Fr
Key: No key defined

Summary of Overturning & Resisting Forces & Moments

Item		.....OVERTURNING..... Force lbs	Distance ft	Moment ft-#
Heel Active Pressure	=	985.0	2.50	2,463.2
Surcharge over Heel	=			
Surcharge Over Toe	=			
Adjacent Footing Load	=			
Added Lateral Load	=			
Load @ Stem Above Soil	=			
	=			
Total		985.0	**O.T.M.**	2,463.2
	=		=	

Resisting/Overturning Ratio = **2.06**
Vertical Loads used for Soil Pressure = 2,382.9 lbs

		.....RESISTING..... Force lbs	Distance ft	Moment ft-#
Soil Over Heel	=	802.9	2.67	2,142.5
Sloped Soil Over Heel	=			
Surcharge Over Heel	=			
Adjacent Footing Load	=			
Axial Dead Load on Stem	=			
* Axial Live Load on Stem	=			
Soil Over Toe	=		0.75	
Surcharge Over Toe	=			
Stem Weight(s)	=	916.9	1.83	1,681.0
Earth @ Stem Transitions	=	266.8	2.33	622.4
Footing Weight	=	396.3	1.59	628.1
Key Weight	=			
Vert. Component	=			
Total =		2,382.9 lbs	**R.M.=**	5,074.0

* Axial live load NOT included in total displayed, or used for overturning resistance, but is included for soil pressure calculation.

Tilt

Horizontal Deflection at Top of Wall due to settlement of soil

(Deflection due to wall bending not considered)

Soil Spring Reaction Modulus 250.0 pci
Horizontal Defl @ Top of Wall (approximate only) 0.116 in

The above calculation is not valid if the heel soil bearing pressure exceeds that of the toe, because the wall would then tend to rotate into the retained soil.

giraf design
9220 roosevelt way ne
seattle wa 98115-2842
(206) 621-0060
girafdesign@gmail.com

Title talerman-simon residence
Job # 2018-024 Dsgnr: nic
Description....
wall W4

Date: 7 JUL 2018

This Wall in File: c:\users\nic\documents\retainpro 10 project files\talerman-simon.RPX

RetainPro 10 (c) 1987-2014, Build 10.14.10.31
License : KW-06056085
License To : GIRAF DESIGN

Cantilevered Retaining Wall Design

Code: IBC 2012,ACI 318-11,ACI 530-11

Criteria

Retained Height	=	4.67 ft
Wall height above soil	=	0.00 ft
Slope Behind Wall	=	0.00 : 1
Height of Soil over Toe	=	8.00 in
Water height over heel	=	0.0 ft

Soil Data

Allow Soil Bearing	=	2,000.0 psf
Equivalent Fluid Pressure Method		
Heel Active Pressure	=	35.0 psf/ft
	=	
Passive Pressure	=	375.0 psf/ft
Soil Density, Heel	=	120.00 pcf
Soil Density, Toe	=	0.00 pcf
Footing||Soil Friction	=	0.525
Soil height to ignore for passive pressure	=	12.00 in

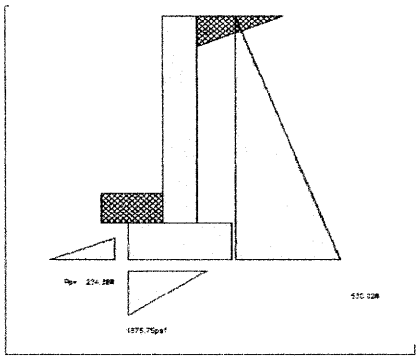

Surcharge Loads

Surcharge Over Heel	=	0.0 psf
Used To Resist Sliding & Overturning		
Surcharge Over Toe	=	0.0 psf
Used for Sliding & Overturning		

Axial Load Applied to Stem

Axial Dead Load	=	0.0 lbs
Axial Live Load	=	0.0 lbs
Axial Load Eccentricity	=	0.0 in

Lateral Load Applied to Stem

Lateral Load	=	0.0 #/ft
...Height to Top	=	0.00 ft
...Height to Bottom	=	0.00 ft
The above lateral load has been increased by a factor of		1.00
Wind on Exposed Stem	=	0.0 psf

Adjacent Footing Load

Adjacent Footing Load	=	0.0 lbs
Footing Width	=	0.00 ft
Eccentricity	=	0.00 in
Wall to Ftg CL Dist	=	0.00 ft
Footing Type		Line Load
Base Above/Below Soil at Back of Wall	=	0.0 ft
Poisson's Ratio	=	0.300

Design Summary

Wall Stability Ratios

Overturning	=	1.67	OK
Sliding	=	1.71	OK
Total Bearing Load	=	1,276 lbs	
...resultant ecc.	=	5.91 in	
Soil Pressure @ Toe	=	1,676 psf	OK
Soil Pressure @ Heel	=	0 psf	OK
Allowable	=	2,000 psf	
Soil Pressure Less Than Allowable			
ACI Factored @ Toe	=	2,011 psf	
ACI Factored @ Heel	=	0 psf	
Footing Shear @ Toe	=	2.7 psi	OK
Footing Shear @ Heel	=	5.8 psi	OK
Allowable	=	82.2 psi	

Sliding Calcs (Vertical Component NOT Used)

Lateral Sliding Force	=	530.0 lbs	
less 100% Passive Force	= -	234.4 lbs	
less 100% Friction Force	= -	669.7 lbs	
Added Force Req'd	=	0.0 lbs	OK
....for 1.5 : 1 Stability	=	0.0 lbs	OK

Load Factors

Building Code	IBC 2012,ACI
Dead Load	1.200
Live Load	1.600
Earth, H	1.600
Wind, W	1.000
Seismic, E	1.000

Stem Construction

Bottom

		As < Min %
Design Height Above Ftg	ft =	0.00
Wall Material Above "Ht"	=	Concrete
Thickness	=	8.00
Rebar Size	=	# 4
Rebar Spacing	=	18.00
Rebar Placed at	=	Center

Design Data

fb/FB + fa/Fa	=	**No Good**
Total Force @ Section	lbs =	610.6
Moment....Actual	ft-# =	950.6
Moment.....Allowable	=	2,321.3
Shear.....Actual	psi =	12.7
Shear.....Allowable	psi =	82.2
Wall Weight	=	100.0
Rebar Depth 'd'	in =	4.00

Masonry Data

f'm	psi =	
Fs	psi =	
Solid Grouting	=	
Modular Ratio 'n'	=	
Short Term Factor	=	
Equiv. Solid Thick.	=	
Masonry Block Type	=	Medium Weight
Masonry Design Method	=	ASD

Concrete Data

f'c	psi =	3,000.0
Fy	psi =	60,000.0

giraf design
9220 roosevelt way ne
seattle wa 98115-2842
(206) 621-0060
girafdesign@gmail.com

Title talerman-simon residence
Job # 2018-024 Dsgnr: nic
Description....
wall W4

Date: 7 JUL 2018

This Wall in File: c:\users\nic\documents\retainpro 10 project files\talerman-simon.RPX

RetainPro 10 (c) 1987-2014, Build 10.14.10.31
License : KW-06056085
License To : GIRAF DESIGN

Cantilevered Retaining Wall Design

Code: IBC 2012,ACI 318-11,ACI 530-11

Footing Dimensions & Strengths

Toe Width	=	0.67 ft
Heel Width	=	1.33
Total Footing Width	=	2.00
Footing Thickness	=	10.00 in
Key Width	=	0.00 in
Key Depth	=	0.00 in
Key Distance from Toe	=	0.00 ft

f'c = 3,000 psi Fy = 60,000 psi
Footing Concrete Density = 150.00 pcf
Min. As % = 0.0018
Cover @ Top 2.00 @ Btm.= 3.00 in

Footing Design Results

		Toe	Heel
Factored Pressure	=	2,011	0 psf
Mu' : Upward	=	385	1 ft-#
Mu' : Downward	=	54	181 ft-#
Mu: Design	=	331	180 ft-#
Actual 1-Way Shear	=	2.71	5.81 psi
Allow 1-Way Shear	=	82.16	82.16 psi

Toe Reinforcing = # 4 @ 18.00 in
Heel Reinforcing = None Spec'd
Key Reinforcing = None Spec'd

Other Acceptable Sizes & Spacings
Toe: Not req'd, Mu < S * Fr
Heel: Not req'd, Mu < S * Fr
Key: No key defined

Summary of Overturning & Resisting Forces & Moments

Item		.....OVERTURNING..... Force lbs	Distance ft	Moment ft-#
Heel Active Pressure	=	530.0	1.83	972.3
Surcharge over Heel	=			
Surcharge Over Toe	=			
Adjacent Footing Load	=			
Added Lateral Load	=			
Load @ Stem Above Soil	=			
	=			
Total		530.0	**O.T.M.**	972.3
	=		=	

Resisting/Overturning Ratio = **1.67**
Vertical Loads used for Soil Pressure = 1,275.5 lbs

		.....RESISTING..... Force lbs	Distance ft	Moment ft-#
Soil Over Heel	=	371.7	1.67	620.2
Sloped Soil Over Heel	=			
Surcharge Over Heel	=			
Adjacent Footing Load	=			
Axial Dead Load on Stem	=			
* Axial Live Load on Stem	=			
Soil Over Toe	=		0.34	
Surcharge Over Toe	=			
Stem Weight(s)	=	467.0	1.00	468.6
Earth @ Stem Transitions	=	186.8	1.50	280.8
Footing Weight	=	250.0	1.00	250.0
Key Weight	=			
Vert. Component	=			
	Total =	1,275.5 lbs	**R.M.=**	1,619.6

* Axial live load NOT included in total displayed, or used for overturning resistance, but is included for soil pressure calculation.

Tilt

Horizontal Deflection at Top of Wall due to settlement of soil

(Deflection due to wall bending not considered)

Soil Spring Reaction Modulus 250.0 pci
Horizontal Defl @ Top of Wall (approximate only) 0.109 in

The above calculation is not valid if the heel soil bearing pressure exceeds that of the toe, because the wall would then tend to rotate into the retained soil.

giraf design
9220 roosevelt way ne
seattle wa 98115-2842
(206) 621-0060
girafdesign@gmail.com

Title **talerman-simon residence**
Job # **2018-024** Dsgnr: **nic**
Description....
driveway wall 5'-0"max.

Date: 3 OCT 2018

This Wall in File: C:\Users\nic\Documents\RetainPro 10 Project Files\talerman-simon.RPX

RetainPro 10 (c) 1987-2014, Build 10.14.10.31
License : KW-06056085
License To : GIRAF DESIGN

Cantilevered Retaining Wall Design

Code: IBC 2012,ACI 318-11,ACI 530-11

Criteria

Retained Height	=	5.67 ft
Wall height above soil	=	0.50 ft
Slope Behind Wall	=	0.00 : 1
Height of Soil over Toe	=	8.00 in
Water height over heel	=	0.0 ft

Soil Data

Allow Soil Bearing	=	2,000.0 psf
Equivalent Fluid Pressure Method		
Heel Active Pressure	=	35.0 psf/ft
	=	
Passive Pressure	=	375.0 psf/ft
Soil Density, Heel	=	120.00 pcf
Soil Density, Toe	=	120.00 pcf
Footing||Soil Friction	=	0.525
Soil height to ignore for passive pressure	=	12.00 in

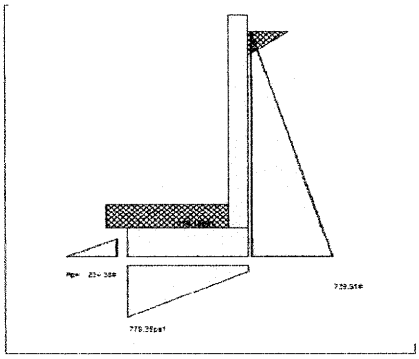

Surcharge Loads

Surcharge Over Heel	=	0.0 psf
Used To Resist Sliding & Overturning		
Surcharge Over Toe	=	0.0 psf
Used for Sliding & Overturning		

Axial Load Applied to Stem

Axial Dead Load	=	0.0 lbs
Axial Live Load	=	0.0 lbs
Axial Load Eccentricity	=	0.0 in

Lateral Load Applied to Stem

Lateral Load	=	0.0 #/ft
...Height to Top	=	0.00 ft
...Height to Bottom	=	0.00 ft
The above lateral load has been increased by a factor of		1.00
Wind on Exposed Stem	=	0.0 psf

Adjacent Footing Load

Adjacent Footing Load	=	0.0 lbs
Footing Width	=	0.00 ft
Eccentricity	=	0.00 in
Wall to Ftg CL Dist	=	0.00 ft
Footing Type		Line Load
Base Above/Below Soil at Back of Wall	=	0.0 ft
Poisson's Ratio	=	0.300

Design Summary

Wall Stability Ratios

Overturning	=	1.99 OK
Sliding	=	1.29 Ratio < 1.5!
Total Bearing Load	=	1,378 lbs
...resultant ecc.	=	4.18 in
Soil Pressure @ Toe	=	779 psf OK
Soil Pressure @ Heel	=	139 psf OK
Allowable	=	2,000 psf
Soil Pressure Less Than Allowable		
ACI Factored @ Toe	=	935 psf
ACI Factored @ Heel	=	167 psf
Footing Shear @ Toe	=	10.2 psi OK
Footing Shear @ Heel	=	0.0 psi OK
Allowable	=	82.2 psi

Sliding Calcs (Vertical Component NOT Used)

Lateral Sliding Force	=	739.9 lbs
less 100% Passive Force	= -	234.4 lbs
less 100% Friction Force	= -	723.4 lbs
Added Force Req'd	=	0.0 lbs OK
....for 1.5 : 1 Stability	=	152.1 lbs NG

Load Factors

Building Code	IBC 2012,ACI
Dead Load	1.200
Live Load	1.600
Earth, H	1.600
Wind, W	1.000
Seismic, E	1.000

Stem Construction

Bottom

		Stem OK
Design Height Above Ftg	ft =	0.00
Wall Material Above "Ht"	=	Concrete
Thickness	=	6.00
Rebar Size	=	# 4
Rebar Spacing	=	12.00
Rebar Placed at	=	Center

Design Data

fb/FB + fa/Fa	=	**0.674**
Total Force @ Section	lbs =	899.9
Moment....Actual	ft-# =	1,700.4
Moment.....Allowable	=	2,523.0
Shear.....Actual	psi =	25.0
Shear.....Allowable	psi =	82.2
Wall Weight	=	75.0
Rebar Depth 'd'	in =	3.00

Masonry Data

f'm	psi =	
Fs	psi =	
Solid Grouting	=	
Modular Ratio 'n'	=	
Short Term Factor	=	
Equiv. Solid Thick.	=	
Masonry Block Type	=	Medium Weight
Masonry Design Method	=	ASD

Concrete Data

f'c	psi =	3,000.0
Fy	psi =	60,000.0

giraf design
9220 roosevelt way ne
seattle wa 98115-2842
(206) 621-0060
girafdesign@gmail.com

Title **talerman-simon residence**
Job # **2018-024** Dsgnr: **nic**
Description....
driveway wall 5'-0"max.

Date: 3 OCT 2018

This Wall in File: C:\Users\nic\Documents\RetainPro 10 Project Files\talerman-simon.RPX

RetainPro 10 (c) 1987-2014, Build 10.14.10.31
License : KW-06056085
License To : GIRAF DESIGN

Cantilevered Retaining Wall Design

Code: IBC 2012,ACI 318-11,ACI 530-11

Footing Dimensions & Strengths

Toe Width	=	2.50 ft
Heel Width	=	0.50
Total Footing Width	=	3.00
Footing Thickness	=	10.00 in
Key Width	=	0.00 in
Key Depth	=	0.00 in
Key Distance from Toe	=	0.00 ft

f'c = 3,000 psi Fy = 60,000 psi
Footing Concrete Density = 150.00 pcf
Min. As % = 0.0018
Cover @ Top 2.00 @ Btm.= 3.00 in

Footing Design Results

		Toe	Heel	
Factored Pressure	=	935	167	psf
Mu' : Upward	=	2,256	0	ft-#
Mu' : Downward	=	769	0	ft-#
Mu: Design	=	1,487	0	ft-#
Actual 1-Way Shear	=	10.21	0.00	psi
Allow 1-Way Shear	=	82.16	0.00	psi

Toe Reinforcing = # 4 @ 12.00 in
Heel Reinforcing = None Spec'd
Key Reinforcing = None Spec'd

Other Acceptable Sizes & Spacings
Toe: Not req'd, Mu < S * Fr
Heel: Not req'd, Mu < S * Fr
Key: No key defined

Summary of Overturning & Resisting Forces & Moments

Item		.....OVERTURNING..... Force lbs	Distance ft	Moment ft-#
Heel Active Pressure	=	739.9	2.17	1,603.7
Surcharge over Heel	=			
Surcharge Over Toe	=			
Adjacent Footing Load	=			
Added Lateral Load	=			
Load @ Stem Above Soil	=			
	=			
Total		739.9	**O.T.M.**	1,603.7
	=		=	

Resisting/Overturning Ratio = **1.99**
Vertical Loads used for Soil Pressure = 1,377.8 lbs

		.....RESISTING..... Force lbs	Distance ft	Moment ft-#
Soil Over Heel	=		3.00	
Sloped Soil Over Heel	=			
Surcharge Over Heel	=			
Adjacent Footing Load	=			
Axial Dead Load on Stem	=			
* Axial Live Load on Stem	=			
Soil Over Toe	=	200.0	1.25	250.0
Surcharge Over Toe	=			
Stem Weight(s)	=	462.7	2.75	1,272.4
Earth @ Stem Transitions	=	340.1	3.25	1,105.5
Footing Weight	=	375.0	1.50	562.5
Key Weight	=			
Vert. Component	=			
Total =		1,377.8 lbs	**R.M.=**	3,190.3

* Axial live load NOT included in total displayed, or used for overturning resistance, but is included for soil pressure calculation.

Tilt

Horizontal Deflection at Top of Wall due to settlement of soil

(Deflection due to wall bending not considered)

Soil Spring Reaction Modulus 250.0 pci
Horizontal Defl @ Top of Wall (approximate only) 0.045 in

The above calculation is not valid if the heel soil bearing pressure exceeds that of the toe, because the wall would then tend to rotate into the retained soil.

giraf design
9220 roosevelt way ne
seattle wa 98115-2842
(206) 621-0060
girafdesign@gmail.com

Title talerman-simon residence
Job # 2018-024 Dsgnr: nic
Description....
driveway wall 3'-0"max.

Date: 3 OCT 2018

This Wall in File: C:\Users\nic\Documents\RetainPro 10 Project Files\talerman-simon.RPX

RetainPro 10 (c) 1987-2014, Build 10.14.10.31
License : KW-06056085
License To : GIRAF DESIGN

Cantilevered Retaining Wall Design

Code: IBC 2012,ACI 318-11,ACI 530-11

Criteria

Retained Height	=	3.67 ft
Wall height above soil	=	0.50 ft
Slope Behind Wall	=	0.00 : 1
Height of Soil over Toe	=	8.00 in
Water height over heel	=	0.0 ft

Soil Data

Allow Soil Bearing	=	2,000.0 psf
Equivalent Fluid Pressure Method		
Heel Active Pressure	=	35.0 psf/ft
	=	
Passive Pressure	=	375.0 psf/ft
Soil Density, Heel	=	120.00 pcf
Soil Density, Toe	=	120.00 pcf
Footing||Soil Friction	=	0.525
Soil height to ignore for passive pressure	=	12.00 in

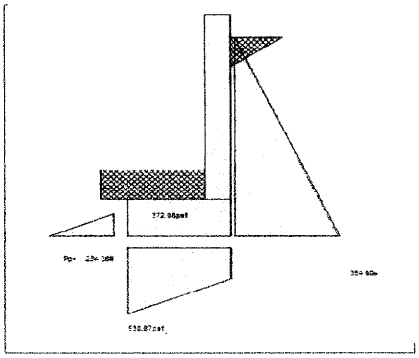

Surcharge Loads

Surcharge Over Heel	=	0.0 psf
Used To Resist Sliding & Overturning		
Surcharge Over Toe	=	0.0 psf
Used for Sliding & Overturning		

Axial Load Applied to Stem

Axial Dead Load	=	0.0 lbs
Axial Live Load	=	0.0 lbs
Axial Load Eccentricity	=	0.0 in

Lateral Load Applied to Stem

Lateral Load	=	0.0 #/ft
...Height to Top	=	0.00 ft
...Height to Bottom	=	0.00 ft
The above lateral load has been increased by a factor of		1.00
Wind on Exposed Stem	=	0.0 psf

Adjacent Footing Load

Adjacent Footing Load	=	0.0 lbs
Footing Width	=	0.00 ft
Eccentricity	=	0.00 in
Wall to Ftg CL Dist	=	0.00 ft
Footing Type		Line Load
Base Above/Below Soil at Back of Wall	=	0.0 ft
Poisson's Ratio	=	0.300

Design Summary

Wall Stability Ratios

Overturning	=	2.60 OK
Sliding	=	2.00 OK
Total Bearing Load	=	903 lbs
...resultant ecc.	=	0.70 in
Soil Pressure @ Toe	=	531 psf OK
Soil Pressure @ Heel	=	372 psf OK
Allowable	=	2,000 psf
Soil Pressure Less Than Allowable		
ACI Factored @ Toe	=	637 psf
ACI Factored @ Heel	=	446 psf
Footing Shear @ Toe	=	3.9 psi OK
Footing Shear @ Heel	=	0.0 psi OK
Allowable	=	82.2 psi

Sliding Calcs (Vertical Component NOT Used)

Lateral Sliding Force	=	354.9 lbs
less 100% Passive Force	= -	234.4 lbs
less 100% Friction Force	= -	474.0 lbs
Added Force Req'd	=	0.0 lbs OK
....for 1.5 : 1 Stability	=	0.0 lbs OK

Load Factors

Building Code	IBC 2012,ACI
Dead Load	1.200
Live Load	1.600
Earth, H	1.600
Wind, W	1.000
Seismic, E	1.000

Stem Construction

Bottom

Design Height Above Ftg	ft =	Stem OK 0.00
Wall Material Above "Ht"	=	Concrete
Thickness	=	6.00
Rebar Size	=	# 4
Rebar Spacing	=	18.00
Rebar Placed at	=	Center

Design Data

fb/FB + fa/Fa	=	**0.268**
Total Force @ Section	lbs =	377.1
Moment....Actual	ft-# =	461.4
Moment.....Allowable	=	1,721.3
Shear.....Actual	psi =	10.5
Shear.....Allowable	psi =	82.2
Wall Weight	=	75.0
Rebar Depth 'd'	in =	3.00

Masonry Data

f'm	psi =	
Fs	psi =	
Solid Grouting	=	
Modular Ratio 'n'	=	
Short Term Factor	=	
Equiv. Solid Thick.	=	
Masonry Block Type	=	Medium Weight
Masonry Design Method	=	ASD

Concrete Data

f'c	psi =	3,000.0
Fy	psi =	60,000.0

giraf design
9220 roosevelt way ne
seattle wa 98115-2842
(206) 621-0060
girafdesign@gmail.com

Title **talerman-simon residence**
Job # **2018-024** Dsgnr: **nic**
Description....
driveway wall 3'-0"max.

Date: 3 OCT 2018

This Wall in File: C:\Users\nic\Documents\RetainPro 10 Project Files\talerman-simon.RPX

RetainPro 10 (c) 1987-2014, Build 10.14.10.31
License : KW-06056085
License To : GIRAF DESIGN

Cantilevered Retaining Wall Design

Code: IBC 2012,ACI 318-11,ACI 530-11

Footing Dimensions & Strengths

Toe Width	=	1.50 ft
Heel Width	=	0.50
Total Footing Width	=	2.00
Footing Thickness	=	10.00 in
Key Width	=	0.00 in
Key Depth	=	0.00 in
Key Distance from Toe	=	0.00 ft

f'c = 3,000 psi Fy = 60,000 psi
Footing Concrete Density = 150.00 pcf
Min. As % = 0.0018
Cover @ Top 2.00 @ Btm.= 3.00 in

Footing Design Results

		Toe	Heel
Factored Pressure	=	637	446 psf
Mu' : Upward	=	663	0 ft-#
Mu' : Downward	=	277	0 ft-#
Mu: Design	=	386	0 ft-#
Actual 1-Way Shear	=	3.85	0.00 psi
Allow 1-Way Shear	=	82.16	0.00 psi

Toe Reinforcing = # 4 @ 18.00 in
Heel Reinforcing = None Spec'd
Key Reinforcing = None Spec'd

Other Acceptable Sizes & Spacings
Toe: Not req'd, Mu < S * Fr
Heel: Not req'd, Mu < S * Fr
Key: No key defined

Summary of Overturning & Resisting Forces & Moments

Item		.....OVERTURNING..... Force lbs	Distance ft	Moment ft-#
Heel Active Pressure	=	354.9	1.50	532.7
Surcharge over Heel	=			
Surcharge Over Toe	=			
Adjacent Footing Load	=			
Added Lateral Load	=			
Load @ Stem Above Soil	=			
	=			
Total		354.9	**O.T.M.**	532.7
	=		=	

Resisting/Overturning Ratio = **2.60**
Vertical Loads used for Soil Pressure = 903.0 lbs

		.....RESISTING..... Force lbs	Distance ft	Moment ft-#
Soil Over Heel	=		2.00	
Sloped Soil Over Heel	=			
Surcharge Over Heel	=			
Adjacent Footing Load	=			
Axial Dead Load on Stem	=			
* Axial Live Load on Stem	=			
Soil Over Toe	=	120.0	0.75	90.0
Surcharge Over Toe	=			
Stem Weight(s)	=	312.8	1.75	547.3
Earth @ Stem Transitions	=	220.2	2.25	495.5
Footing Weight	=	250.0	1.00	250.0
Key Weight	=			
Vert. Component	=			
Total =		903.0 lbs	**R.M.=**	1,382.8

* Axial live load NOT included in total displayed, or used for overturning resistance, but is included for soil pressure calculation.

Tilt

Horizontal Deflection at Top of Wall due to settlement of soil

(Deflection due to wall bending not considered)

Soil Spring Reaction Modulus 250.0 pci
Horizontal Defl @ Top of Wall (approximate only) 0.031 in

The above calculation is not valid if the heel soil bearing pressure exceeds that of the toe, because the wall would then tend to rotate into the retained soil.

giraf design
9220 roosevelt way ne
seattle wa 98115-2842
(206) 621-0060
girafdesign@gmail.com

Title **talerman-simon residence**
Job # **2018-024** Dsgnr: **nic**
Description....
driveway wall 3'-0"max. (sloped backfill)

Date: 3 OCT 2018

This Wall in File: C:\Users\nic\Documents\RetainPro 10 Project Files\talerman-simon.RPX

RetainPro 10 (c) 1987-2014, Build 10.14.10.31
License : KW-06056085
License To : GIRAF DESIGN

Cantilevered Retaining Wall Design

Code: IBC 2012,ACI 318-11,ACI 530-11

Criteria

Retained Height	=	3.67 ft
Wall height above soil	=	0.50 ft
Slope Behind Wall	=	2.00 : 1
Height of Soil over Toe	=	8.00 in
Water height over heel	=	0.0 ft

Soil Data

Allow Soil Bearing	=	2,000.0 psf
Equivalent Fluid Pressure Method		
Heel Active Pressure	=	47.0 psf/ft
	=	
Passive Pressure	=	375.0 psf/ft
Soil Density, Heel	=	120.00 pcf
Soil Density, Toe	=	120.00 pcf
Footing||Soil Friction	=	0.525
Soil height to ignore for passive pressure	=	12.00 in

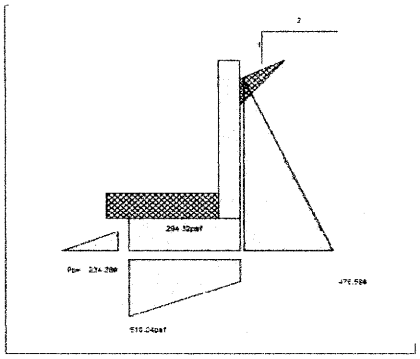

Surcharge Loads

Surcharge Over Heel	=	0.0 psf
Used To Resist Sliding & Overturning		
Surcharge Over Toe	=	0.0 psf
Used for Sliding & Overturning		

Axial Load Applied to Stem

Axial Dead Load	=	0.0 lbs
Axial Live Load	=	0.0 lbs
Axial Load Eccentricity	=	0.0 in

Lateral Load Applied to Stem

Lateral Load	=	0.0 #/ft
...Height to Top	=	0.00 ft
...Height to Bottom	=	0.00 ft
The above lateral load has been increased by a factor of		1.00
Wind on Exposed Stem	=	0.0 psf

Adjacent Footing Load

Adjacent Footing Load	=	0.0 lbs
Footing Width	=	0.00 ft
Eccentricity	=	0.00 in
Wall to Ftg CL Dist	=	0.00 ft
Footing Type		Line Load
Base Above/Below Soil at Back of Wall	=	0.0 ft
Poisson's Ratio	=	0.300

Design Summary

Wall Stability Ratios

Overturning	=	2.60	OK
Sliding	=	1.60	OK
Total Bearing Load	=	1,005 lbs	
...resultant ecc.	=	1.34 in	
Soil Pressure @ Toe	=	510 psf	OK
Soil Pressure @ Heel	=	294 psf	OK
Allowable	=	2,000 psf	
Soil Pressure Less Than Allowable			
ACI Factored @ Toe	=	612 psf	
ACI Factored @ Heel	=	353 psf	
Footing Shear @ Toe	=	4.8 psi	OK
Footing Shear @ Heel	=	0.0 psi	OK
Allowable	=	82.2 psi	

Sliding Calcs (Vertical Component NOT Used)

Lateral Sliding Force	=	476.6 lbs	
less 100% Passive Force	= -	234.4 lbs	
less 100% Friction Force	= -	527.9 lbs	
Added Force Req'd	=	0.0 lbs	OK
....for 1.5 : 1 Stability	=	0.0 lbs	OK

Load Factors

Building Code	IBC 2012,ACI
Dead Load	1.200
Live Load	1.600
Earth, H	1.600
Wind, W	1.000
Seismic, E	1.000

Stem Construction

Bottom

Design Height Above Ftg	ft =	Stem OK 0.00
Wall Material Above "Ht"	=	Concrete
Thickness	=	6.00
Rebar Size	=	# 4
Rebar Spacing	=	16.00
Rebar Placed at	=	Center

Design Data

fb/FB + fa/Fa	=	**0.322**
Total Force @ Section	lbs =	506.4
Moment....Actual	ft-# =	619.5
Moment.....Allowable	=	1,925.4
Shear.....Actual	psi =	14.1
Shear.....Allowable	psi =	82.2
Wall Weight	=	75.0
Rebar Depth 'd'	in =	3.00

Masonry Data

f'm	psi =	
Fs	psi =	
Solid Grouting	=	
Modular Ratio 'n'	=	
Short Term Factor	=	
Equiv. Solid Thick.	=	
Masonry Block Type	=	Medium Weight
Masonry Design Method	=	ASD

Concrete Data

f'c	psi =	3,000.0
Fy	psi =	60,000.0

giraf design
9220 roosevelt way ne
seattle wa 98115-2842
(206) 621-0060
girafdesign@gmail.com

Title **talerman-simon residence** Page: FD-19
Job # **2018-024** Dsgnr: **nic** Date: 3 OCT 2018
Description....
driveway wall 3'-0"max. (sloped backfill)

This Wall in File: C:\Users\nic\Documents\RetainPro 10 Project Files\talerman-simon.RPX

RetainPro 10 (c) 1987-2014, Build 10.14.10.31
License : KW-06056085
License To : GIRAF DESIGN

Cantilevered Retaining Wall Design

Code: IBC 2012,ACI 318-11,ACI 530-11

Footing Dimensions & Strengths

Toe Width	=	2.00 ft
Heel Width	=	0.50
Total Footing Width	=	2.50
Footing Thickness	=	10.00 in
Key Width	=	0.00 in
Key Depth	=	0.00 in
Key Distance from Toe	=	0.00 ft

f'c = 3,000 psi Fy = 60,000 psi
Footing Concrete Density = 150.00 pcf
Min. As % = 0.0018
Cover @ Top 2.00 @ Btm.= 3.00 in

Footing Design Results

		Toe	Heel
Factored Pressure	=	612	353 psf
Mu' : Upward	=	1,086	0 ft-#
Mu' : Downward	=	492	0 ft-#
Mu: Design	=	594	0 ft-#
Actual 1-Way Shear	=	4.83	0.00 psi
Allow 1-Way Shear	=	82.16	0.00 psi

Toe Reinforcing = # 4 @ 16.00 in
Heel Reinforcing = None Spec'd
Key Reinforcing = None Spec'd

Other Acceptable Sizes & Spacings
Toe: Not req'd, Mu < S * Fr
Heel: Not req'd, Mu < S * Fr
Key: No key defined

Summary of Overturning & Resisting Forces & Moments

Item		.....OVERTURNING..... Force lbs	Distance ft	Moment ft-#
Heel Active Pressure	=	476.6	1.50	715.4
Surcharge over Heel	=			
Surcharge Over Toe	=			
Adjacent Footing Load	=			
Added Lateral Load	=			
Load @ Stem Above Soil	=			
	=			
Total		476.6	**O.T.M.**	715.4
	=		=	

		.....RESISTING..... Force lbs	Distance ft	Moment ft-#
Soil Over Heel	=		2.50	
Sloped Soil Over Heel	=		2.50	
Surcharge Over Heel	=			
Adjacent Footing Load	=			
Axial Dead Load on Stem	=			
* Axial Live Load on Stem	=			
Soil Over Toe	=	160.0	1.00	160.0
Surcharge Over Toe	=			
Stem Weight(s)	=	312.8	2.25	703.7
Earth @ Stem Transitions	=	220.2	2.75	605.6
Footing Weight	=	312.5	1.25	390.6
Key Weight	=			
Vert. Component	=			
	Total =	1,005.5 lbs	**R.M.=**	1,859.9

Resisting/Overturning Ratio = **2.60**
Vertical Loads used for Soil Pressure = 1,005.5 lbs
Vertical component of active pressure NOT used for soil pressure

* Axial live load NOT included in total displayed, or used for overturning resistance, but is included for soil pressure calculation.

Tilt

Horizontal Deflection at Top of Wall due to settlement of soil

(Deflection due to wall bending not considered)

Soil Spring Reaction Modulus 250.0 pci
Horizontal Defl @ Top of Wall (approximate only) 0.024 in

The above calculation is not valid if the heel soil bearing pressure exceeds that of the toe, because the wall would then tend to rotate into the retained soil.

giraf design
9220 roosevelt way ne
seattle wa 98115-2842
(206) 621-0060
girafdesign@gmail.com

Title **talerman-simon residence**
Job # **2018-024** Dsgnr: **nic**
Description....
driveway wall 5'-0"max. (sloped backfill)

Date: 3 OCT 2018

This Wall in File: C:\Users\nic\Documents\RetainPro 10 Project Files\talerman-simon.RPX

RetainPro 10 (c) 1987-2014, Build 10.14.10.31
License : KW-06056085
License To : GIRAF DESIGN

Cantilevered Retaining Wall Design

Code: IBC 2012,ACI 318-11,ACI 530-11

Criteria

Retained Height	=	5.67 ft
Wall height above soil	=	0.50 ft
Slope Behind Wall	=	2.00 : 1
Height of Soil over Toe	=	8.00 in
Water height over heel	=	0.0 ft

Soil Data

Allow Soil Bearing	=	2,000.0 psf
Equivalent Fluid Pressure Method		
Heel Active Pressure	=	47.0 psf/ft
	=	
Passive Pressure	=	375.0 psf/ft
Soil Density, Heel	=	120.00 pcf
Soil Density, Toe	=	120.00 pcf
Footing||Soil Friction	=	0.525
Soil height to ignore for passive pressure	=	12.00 in

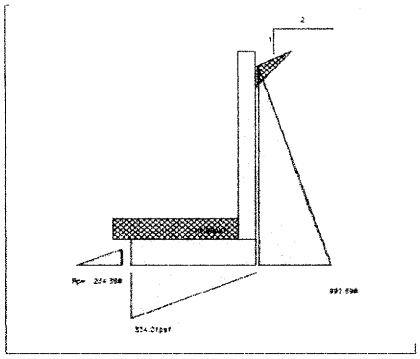

Surcharge Loads

Surcharge Over Heel	=	0.0 psf
Used To Resist Sliding & Overturning		
Surcharge Over Toe	=	0.0 psf
Used for Sliding & Overturning		

Axial Load Applied to Stem

Axial Dead Load	=	0.0 lbs
Axial Live Load	=	0.0 lbs
Axial Load Eccentricity	=	0.0 in

Lateral Load Applied to Stem

Lateral Load	=	0.0 #/ft
...Height to Top	=	0.00 ft
...Height to Bottom	=	0.00 ft
The above lateral load has been increased by a factor of		1.00
Wind on Exposed Stem	=	0.0 psf

Adjacent Footing Load

Adjacent Footing Load	=	0.0 lbs
Footing Width	=	0.00 ft
Eccentricity	=	0.00 in
Wall to Ftg CL Dist	=	0.00 ft
Footing Type		Line Load
Base Above/Below Soil at Back of Wall	=	0.0 ft
Poisson's Ratio	=	0.300

Design Summary

Wall Stability Ratios

Overturning	=	1.81 OK
Sliding	=	1.02 Ratio < 1.5!
Total Bearing Load	=	1,480 lbs
...resultant ecc.	=	6.80 in
Soil Pressure @ Toe	=	834 psf OK
Soil Pressure @ Heel	=	12 psf OK
Allowable	=	2,000 psf
Soil Pressure Less Than Allowable		
ACI Factored @ Toe	=	1,001 psf
ACI Factored @ Heel	=	14 psf
Footing Shear @ Toe	=	11.9 psi OK
Footing Shear @ Heel	=	0.0 psi OK
Allowable	=	82.2 psi

Sliding Calcs (Vertical Component NOT Used)

Lateral Sliding Force	=	993.6 lbs
less 100% Passive Force	= -	234.4 lbs
less 100% Friction Force	= -	777.2 lbs
Added Force Req'd	=	0.0 lbs OK
....for 1.5 : 1 Stability	=	478.8 lbs NG

Load Factors

Building Code	IBC 2012,ACI
Dead Load	1.200
Live Load	1.600
Earth, H	1.600
Wind, W	1.000
Seismic, E	1.000

Stem Construction

Bottom

		Stem OK
Design Height Above Ftg	ft =	0.00
Wall Material Above "Ht"	=	Concrete
Thickness	=	6.00
Rebar Size	=	# 4
Rebar Spacing	=	10.00
Rebar Placed at	=	Center

Design Data

fb/FB + fa/Fa	=	**0.765**
Total Force @ Section	lbs =	1,208.4
Moment....Actual	ft-# =	2,283.4
Moment.....Allowable	=	2,985.1
Shear.....Actual	psi =	33.6
Shear.....Allowable	psi =	82.2
Wall Weight	=	75.0
Rebar Depth 'd'	in =	3.00

Masonry Data

f'm	psi =	
Fs	psi =	
Solid Grouting	=	
Modular Ratio 'n'	=	
Short Term Factor	=	
Equiv. Solid Thick.	=	
Masonry Block Type	=	Medium Weight
Masonry Design Method	=	ASD

Concrete Data

f'c	psi =	3,000.0
Fy	psi =	60,000.0

giraf design
9220 roosevelt way ne
seattle wa 98115-2842
(206) 621-0060
girafdesign@gmail.com

Title talerman-simon residence
Job # 2018-024 Dsgnr: nic
Description....
driveway wall 5'-0"max. (sloped backfill)

Date: 3 OCT 2018

This Wall in File: C:\Users\nic\Documents\RetainPro 10 Project Files\talerman-simon.RPX

RetainPro 10 (c) 1987-2014, Build 10.14.10.31
License : KW-06056085
License To : GIRAF DESIGN

Cantilevered Retaining Wall Design

Code: IBC 2012,ACI 318-11,ACI 530-11

Footing Dimensions & Strengths

Toe Width	=	3.00 ft
Heel Width	=	0.50
Total Footing Width	=	3.50
Footing Thickness	=	10.00 in
Key Width	=	0.00 in
Key Depth	=	0.00 in
Key Distance from Toe	=	0.00 ft

f'c = 3,000 psi Fy = 60,000 psi
Footing Concrete Density = 150.00 pcf
Min. As % = 0.0018
Cover @ Top 2.00 @ Btm.= 3.00 in

Footing Design Results

		Toe	Heel
Factored Pressure	=	1,001	14 psf
Mu' : Upward	=	3,235	0 ft-#
Mu' : Downward	=	1,107	0 ft-#
Mu: Design	=	2,128	0 ft-#
Actual 1-Way Shear	=	11.86	0.00 psi
Allow 1-Way Shear	=	82.16	0.00 psi

Toe Reinforcing = # 4 @ 10.00 in
Heel Reinforcing = None Spec'd
Key Reinforcing = None Spec'd

Other Acceptable Sizes & Spacings
Toe: #4@ 11.11 in, #5@ 17.22 in, #6@ 24.44 in, #7@ 33.33 in, #8@ 43.89 in, #9@ 5
Heel: Not req'd, Mu < S * Fr
Key: No key defined

Summary of Overturning & Resisting Forces & Moments

Item		.....OVERTURNING..... Force lbs	Distance ft	Moment ft-#
Heel Active Pressure	=	993.6	2.17	2,153.5
Surcharge over Heel	=			
Surcharge Over Toe	=			
Adjacent Footing Load	=			
Added Lateral Load	=			
Load @ Stem Above Soil	=			
	=			
Total		993.6	**O.T.M.**	2,153.5
	=		=	

Resisting/Overturning Ratio = **1.81**
Vertical Loads used for Soil Pressure = 1,480.3 lbs
Vertical component of active pressure NOT used for soil pressure

		.....RESISTING..... Force lbs	Distance ft	Moment ft-#
Soil Over Heel	=		3.50	
Sloped Soil Over Heel	=		3.50	
Surcharge Over Heel	=			
Adjacent Footing Load	=			
Axial Dead Load on Stem	=			
* Axial Live Load on Stem	=			
Soil Over Toe	=	240.0	1.50	360.0
Surcharge Over Toe	=			
Stem Weight(s)	=	462.7	3.25	1,503.7
Earth @ Stem Transitions	=	340.1	3.75	1,275.5
Footing Weight	=	437.5	1.75	765.6
Key Weight	=			
Vert. Component	=			
	Total =	1,480.3 lbs	**R.M.=**	3,904.8

* Axial live load NOT included in total displayed, or used for overturning resistance, but is included for soil pressure calculation.

Tilt

Horizontal Deflection at Top of Wall due to settlement of soil

(Deflection due to wall bending not considered)

Soil Spring Reaction Modulus 250.0 pci
Horizontal Defl @ Top of Wall (approximate only) 0.041 in

The above calculation is not valid if the heel soil bearing pressure exceeds that of the toe, because the wall would then tend to rotate into the retained soil.