GEOTECHNICAL ENGINEERING REPORT

TALERMAN RESIDENCE EVALUATION & SLOPE STABILITY ANALYSIS
3879 WEST MERCER WAY
MERCER ISLAND, WASHINGTON

Project No. 1945.01
October 9, 2018

Prepared for:
Mr. Edward Talerman

Prepared by:

ZipperGeo
Geoprofessional Consultants
19019 36th Avenue W., Suite E
Lynnwood, WA 98036

ZipperGeo
Geoprofessional Consultants

Project No. 1945.01
October 9, 2018

Mr. Edward Talerman
3879 West Mercer Way
Mercer Island, WA 98040

Subject: Subsurface Exploration and Geotechnical Engineering Evaluation
Proposed Single-Family Residential Project
3879 West Mercer Way
Mercer Island, Washington

Dear Mr. Talerman,

In accordance with your request and written authorization, Zipper Geo Associates, LLC (ZGA) has completed the subsurface exploration and geotechnical engineering evaluation for the Talerman residence project. This report presents the findings of our site reconnaissance and subsurface evaluation and provides recommendations for the proposed development of the site. Our services were completed in general accordance with ZGA Proposal No. P17333 dated December 15, 2017. Written authorization to proceed was provided by you on December 20, 2017. We appreciate the opportunity to be of service to you on this project. If you have any questions concerning this report, or if we may be of further service, please contact us.

Sincerely,
Zipper Geo Associates, LLC

THOMAS A. JONES
STATE OF WASHINGTON
29074
10-9-18
REGISTERED
PROFESSIONAL ENGINEER

Thomas A. Jones, P.E.
Principal

TABLE OF CONTENTS

Page

INTRODUCTION **2**
SITE AND PROJECT DESCRIPTION **2**
SITE RECONNAISANCE **2**
MAPPED GEOLOGIC CONDITIONS **2**
SUBSURFACE EVALUATION **2**
Soil Conditions 3
Groundwater Conditions 4
CONCLUSIONS AND RECOMMENDATIONS **4**
General 4
Geologic Hazard Area Considerations 4
Existing Slope Stability Considerations 5
Statement of Risk 6
Seismic Considerations 6
Site Preparation 7
Structural Fill Materials and Preparation 9
Utility Trenches 10
Temporary and Permanent Slopes 11
Stormwater Infiltration Feasibility 12
Temporary Shoring 13
Soldier Pile Shoring and Lagging Design Parameters 13
Shoring Wall Monitoring Plan 14
Building Foundations 15
Backfilled Retaining Walls 16
On-Grade Concrete Slabs 17
Permanent Erosion Control and Drainage Considerations 18
CLOSURE **18**

FIGURES

Figure 1 – Site and Exploration Plan
Figure 2 – Generalized Cross Section A-A’
Figure 3 – Profile A-A’ – Static Slope Stability Analysis
Figure 4 – Profile A-A’ – Seismic Slope Stability Analysis
Figure 5 – Soldier Pile Shoring Design Parameters
Figure 6 – Lateral Pressures from Surcharge Loads

APPENDICES

Appendix A – Subsurface Exploration Procedures and Logs
Appendix B – Laboratory Testing Procedures and Results

GEOTECHNICAL ENGINEERING REPORT
TALERMAN RESIDENCE EVALUATION
3879 WEST MERCER WAY
MERCER ISLAND, WA 98040

Project No. 1945.01
October 9, 2018

INTRODUCTION

This report presents the subsurface conditions encountered at the site and our geotechnical engineering recommendations for the above-referenced project. Our scope of services included reviewing readily available geologic data, a site reconnaissance, subsurface evaluation, laboratory testing, geotechnical engineering analysis, and preparation of this report. The project description, site conditions, and our geotechnical conclusions and recommendations are presented in the text of this report. Supporting data including detailed exploration logs and field exploration procedures, results of laboratory testing, and the results of our slope stability analyses are presented as appendices and figures.

SITE AND PROJECT DESCRIPTION

The site is a developed single-family residential property located at 3879 West Mercer Way in Mercer Island, Washington. The property is located on the west side of Mercer Island and includes a gently sloping upland portion which supports a house, detached carport, shed, and landscaped areas. A very steep west-facing slope is located about 165 feet west of the existing residence and extends down to the shoreline of Lake Washington. The steep slope has an average slope inclination on the order of 50 degrees with a total relief of about 100 to 110 feet.

We understand the proposed project would include demolishing the existing residence and carport structures and building a new single-family residence with a daylight basement and connected garage. The footprint of the proposed residence is larger than the existing structure and would generally cover the existing footprint as well as extend further to the north. Therefore, some grading will be necessary. A cut of up to about 10 to 11 feet will be necessary in the area of the proposed structure with a basement. Some new fill will be placed in the area of the garage, and minor cuts and fills of less than 2 feet are proposed on the west side of the residence. Stormwater runoff collected on the site will be routed to the south to a City of Mercer Island storm drain in Freeman Avenue.

We understand that a shallow landslide occurred on the steep slope in the recent past. The landslide head scarp is located about 165 feet from the existing residence. Debris from the landslide was deposited at the toe of the slope and extended into Lake Washington.

SITE RECONNAISANCE

An engineering geologist from our firm completed a surficial reconnaissance of the site and immediate vicinity. A summary of our primary observations is presented below.

Steep Slope

The top of the steep west-facing slope is located about 165 feet west of the the existing house and extends down to the shoreline of Lake Washington. The slope has an estimated total relief of about 100 to 110 feet and appears to consist of two primary geologic units, or layers, as discussed below.

The upper 35 to 40 feet of the steep slope has typical slope inclinations ranging from about 45 to 55 degrees and is comprised primarily of sand with silt and gravel. The area of the site immediately above the upper sandy portion of the slope does not exhibit surficial indications of past slope creep or slumping. However, the steep slope has experienced a shallow slide on the order of one to feet thick in the recent past as indicated by the lack of vegetation. No vegetation had re-established itself at the time of our observations.

The middle approximate 50 feet of the slope consists of native, hard, silty clay that has an average slope angle of about 55 to 65 degrees. This portion of the slope has also experienced a shallow slide on the order of two feet thick in the recent past as indicated by the lack of vegetation. Groundwater seepage was not observed at the contact between the sand and clay that is common in the Puget Sound region. Given the lack of groundwater daylighting at the contact between the sand and clay units, we estimate that the groundwater that does perch above the low permeability clay deposit may flow to the south. No vegetation had re-established itself at the time of our observations.

A wedge of colluvial soil has accumulated at the base of the slope and is on the order of 20 feet high. These soils originated from both the upper sandy portion of the bluff, as well as from the lower clay layer. Colluvial soils that have accumulated at the base of the slope included trees and brush that had slid with the soil mass.

MAPPED GEOLOGIC CONDITIONS

According to the *Geologic Map of Mercer Island, Washington* by Kathy G. Troost & Aaron P. Wisher, 2006, the site is mapped as being underlain by Pre-Olympia non-glacial (Qpon), coarse grained (Qpoc), and fine grained (Qpof) deposits. The majority of the surficial soils at the site are mapped as the Qpon which is described as sand, gravel, silt, clay, and organic deposits. The Qpoc and Qpof deposits are mapped along the extreme western end of the site. The Qpoc deposit is comprised of sand and gravel, clean to silty, with some silt layers. The Qpof deposit consists of laminated to massive silt and clay with possible sandy interbeds. We interpret the surficial sand and gravel encountered in borings B-1 and B-3 to represent the Qpon deposit, the surficial sand in boring B-2 and the deeper sands in borings B-1 and B-3 to represent the Qpoc deposit and the deeper silt and clay encountered in borings B-1 and B-2 to represent the Qpof deposit.

SUBSURFACE EVALUATION

The subsurface evaluation for this project included three geotechnical borings (B-1 through B-3) located west to east across the site that extended to depths of approximately 31½ to 61½ feet below the ground surface. The approximate locations of the borings are presented on Figure 1, the Site and Exploration

Plan. A subsurface cross-section was developed from the subsurface information obtained from the borings and is presented on Figure 2, Cross Section A-A'. This cross section was used to complete our slope stability analysis of the west-facing steep slope. Soils were visually classified in general accordance with the Unified Soil Classification System, as well as laboratory testing completed on representative soil samples. Descriptive logs of the subsurface explorations and the procedures utilized in the subsurface evaluation are presented in Appendix A. Laboratory testing procedures and results are presented in Appendix B. Generalized descriptions of the subsurface soil and groundwater conditions are presented in the following sections.

Soil Conditions

The following soil descriptions have been generalized for ease of report interpretation. Please note that the deposits are compositionally variable with respect to depth and lateral extent due to changes in their depositional environment. Please refer to the boring logs for detailed soil descriptions at the exploration locations.

Boring B-1 was completed about 155 feet west of the existing residence near the top of the steep slope. We did not observe any surficial indications of slope movement in the area. Boring B-1 encountered about 6 inches of organic-rich sandy topsoil over approximately 4 feet of very loose sandy gravel with some silt and loose sand with gravel and silt. At a depth of approximately 4½ feet, medium dense sand with trace silt was encountered and extended to a depth of about 8 feet. Below the sand layer, very stiff silt with some medium dense fine sand interbeds was encountered to a depth of about 14 feet. Dense silty sand was encountered below the interbedded sand and silt and extended to a depth of about 38 feet below the ground surface. From approximately 38 feet to the bottom of the boring at 61½ feet, very stiff grading to hard, low plasticity silty clay was encountered.

Boring B-2 was completed about 40 feet west of the existing residence. Boring B-2 encountered sod over about one foot of loose organic-rich silty sand over approximately 3½ feet of loose sandy silt and silty sand with some gravel. At a depth of about 4½ feet, medium dense silty sand with varying proportions of gravel was encountered and extended to a depth of about 9½ feet. A lense of stiff silt with some fine sand and trace gravel was encountered between about 9½ and 12 feet. Below the stiff silt, dense silty fine sand was encountered to a depth of about 38 feet. Very stiff fine sandy silt was encountered between approximately 38 and 45 feet. From approximately 38 feet to the total depth explored of 56 feet below the ground surface, hard silty clay with varying proportions of silt and gravel was encountered.

Boring B-3 was completed about 24 feet east of the existing residence in a landscape area. Boring B-3 encountered about 12 inches of organic-rich sandy topsoil over approximately 7 feet of loose grading to medium dense sand with varying proportions of gravel and silt. At a depth of approximately 7 feet, interbedded medium dense to dense sand with varying proportions of silt and silt with varying proportions of sand was encountered and extended to a depth of about 14½ feet. Dense, wet, silty sand was encountered below the interbedded sand and silt and extended to the bottom of the boring at about 31½ feet below the ground surface.

Figure 2 presents a generalized subsurface cross section depicting our interpretation of soil conditions beneath the site.

Groundwater Conditions

Relatively thin layers of perched groundwater seepage were observed in borings B-2 and B-3 at the time of drilling. Perched groundwater seepage was observed in boring B-2 between about 14 and 15 feet below the ground surface. In boring B-3 zones of perched groundwater were observed between approximately 5 to 8 feet and 10 to 12 feet below the ground surface. The observed seepage is interpreted to represent groundwater perched above layers of soil with a higher silt content and/or higher relative density. These observations represent groundwater conditions at the time of the field exploration. Groundwater conditions should be expected to fluctuate due to changes in season, precipitation patterns, site utilization, on-site or off-site irrigation activities, and other on- and off-site factors.

During the subsurface evaluation, we observed the steep slope on the west side of the site from the shoreline. We did not observe perched groundwater daylighting from the slope that is common where higher permeability sandy soils overly lower permeability soils. Given the topographic expression in the area, it is possible that groundwater flows to the south/southwest.

CONCLUSIONS AND RECOMMENDATIONS

General

Based upon the subsurface conditions encountered in the borings and the results of our slope stability analysis, it is our opinion that the proposed re-development of the site is feasible from a geotechnical engineering standpoint. However, stormwater infiltration is not allowed in this area by the City of Mercer Island due to the area being categorized as a landslide-prone area.

Geologic Hazard Area Considerations

Based on the Geologic Hazard Maps for the City of Mercer Island, all or a portion of the project site is mapped as being within landslide, erosion, and seismic hazard areas. According to the Mercer Island Municipal Code, the site meets the definition of a Critical Area due to the identified geologic hazards:

- Geologic Hazard Area: Areas susceptible to erosion, sliding, earthquake, or other geological events based on a combination of slope (gradient or aspect), soils, geologic material, hydrology, vegetation, or alterations, including landslide hazard areas, erosion hazard areas and seismic hazard areas.

- Erosion Hazard Area: Those areas greater than 15% slope and subject to severe risk of erosion due to wind, rain, water, slope or other natural agents including those soil types and/or areas identified by the U.S. Department of Agriculture's Natural Resources Conservation Service as having "severe" or "very severe" rill and inter-rill erosion hazard.

The entire project site is mapped as being within an erosion hazard area.

- Landslide Hazard Areas: Those areas subject to landslides based on a combination of geologic, topographic, and hydrologic factors, including:
  1. Areas of historic failures,
  2. Areas with all three of the following characteristics:
     a. Slopes steeper than 15%,
     b. Hillsides intersecting geologic contacts with a relatively permeable sediment overlying a relatively impermeable sediment or bedrock, and
     c. Springs or groundwater seepage.
  3. Areas that have shown evidence of past movement or that are underlain or covered by mass wastage debris from past movements,
  4. Areas potentially unstable because of rapid stream incision and stream bank erosion, or
  5. Steep slope. Any slope over 40 percent or greater calculated by measuring the vertical rise over any 30-foot horizontal run.

The entire project site is mapped as being within a landslide hazard area.

- Seismic Hazard Areas: Seismic hazard areas are areas subject to severe risk of damage as a result of earthquake induced ground shaking, slope failure, settlement, soil liquefaction, or surface faulting.

The approximate western half of the site is mapped as being in a seismic hazard area.

Existing Slope Stability Considerations

A slope stability analysis allows a determination to be made regarding the balance between forces tending to cause a soil mass to move downslope (driving forces) and the forces available to prevent downslope movement (resisting forces). The ratio between the resisting and driving forces is expressed in terms of a factor of safety. A factor of safety of 1 is achieved when the resisting and driving forces are equal; a slope in this condition is marginally stable. In cases where the driving forces exceed the resisting forces, a factor of safety of less than 1 is achieved and downslope soil movement is theoretically likely. If the resisting forces exceed the driving forces, the factor of safety exceeds 1 and downslope soil movement is less likely. For this analysis, we ran our models to determine the location of the slide planes targeting a static safety factor of 1.5 and a pseudo-static (seismic) safety factors of 1.1.

<u>Slope Profile A-A'</u>

We completed slope stability analyses using Cross Section A-A', Figure 2, using the computer program SLIDE. Slope profile A-A' extends across the project site and down the fall line of the steep slope. Our analysis considered ground motions associated with the 1-in-2,475-year seismic event (2 percent probability of exceedance in 50 years) and used a pseudo-static horizontal ground acceleration (k_h) of 0.29g ($0.5a_{max}$). The analysis incorporated soil characteristics based upon our classification of soils retrieved from the explorations, laboratory testing, and published correlations regarding soil index properties and characteristics. We also incorporated groundwater conditions encountered at the time of exploration.

In general, our analyses indicate that under static conditions with the groundwater levels noted during our field explorations a safety factor of 1.5 is achieved at a distance of approximately 35 feet east of the top of the existing slope or about 135 feet west of the existing residence. The results of our static analysis are presented on Figure 3 with the predicted failure plane that exceeds a safety factor of 1.5.

Under seismic conditions associated with the design earthquake ground motion, a safety factor of 1.1 is achieved at a distance of approximately 45 feet east of the top of the existing slope or about 125 feet west of the existing residence. The results of our pseudo-static analysis are presented on Figure 4 with the predicted failure plane that exceeds a safety factor of 1.1. The other green lines to the west and east of the predicted failure plane with a safety factor of 1.1 represent predicted failure planes with safety factors between 1.1 and 1.2. The proposed building envelope for this project is set back well to the east of the pseudo-static failure plane and should not have an adverse impact on the stability of the steep slope.

Increased groundwater levels within the upper portions of the slope, or saturation and seepage caused by heavy precipitation or through infiltration of stormwater could reduce the overall stability of the steep slope and move the head of the slide planes associated with the minimum desired safety factors further to the east. Weathering of the surficial soils that comprise the steep slope creates a high probability that the steep slope will continue to experience shallow slides over time.

Statement of Risk

Per Section 19.073060(D) of the Mercer Island Unified Land Development Code, the City of Mercer Island requires a "Statement of Risk" by the geotechnical engineer for work in a geologic hazard area. It is Zipper Geo Associates opinion that the proposed work would render the development as safe as if it were not located in a geologic hazard area provided that the recommendations in this report are followed and that any recommendations by Zipper Geo Associates during construction are followed.

Seismic Considerations

Seismic Setting: According to the U.S. Geological Survey, the closest mapped Quaternary (past 1.6 million years) fault to the project site is the northern limb of the Seattle Fault Zone. The fault has been mapped approximately 250 feet north of the project site. The age of the Seattle Fault Zone is less than 15,000 years and is in the slip rate category of between 0.2 and 1.0 mm/year. Most of the fault zone is concealed by Holocene glacial and post-glacial deposits and is primarily mapped based on the location of magnetic anomalies.

Geologic evidence indicates that ground surface rupture from movement on the Seattle Fault zone occurred about 1,100 years ago. The geologic record suggests that potential future movement of the fault zone may not occur for several thousand years (Johnson, et al., 1999, 2002). Given the relatively long return period of the Seattle Fault zone and the location of the mapped fault zone relative to the project site, it is our opinion that the risk of ground surface rupture at the site is low.

Seismic Design Parameters: Values provided below are based upon data from the 2015 International Building Code (IBC). The following table summarizes our recommended seismic design criteria. Our recommendation to use Seismic Site Class D is based on the subsurface conditions encountered, deep subsurface conditions presented on geologic maps that include the project site, and our familiarity with the geologic conditions in the area.

IBC Seismic Design Criteria	
Parameter	**Value**
2015 International Building Code Site Classification (IBC)	Site Class D
Site Latitude/Longitude	47.5747/-122.2405
Mean Peak Ground Acceleration, PGA_M	0.58g
Spectral Short-Period Acceleration, S_S	1.407g
Spectral 1-Second Acceleration, S_1	0.541g
Site Coefficient for a Short Period, F_A	1.00
Site Coefficient for a 1-Second Period, F_V	1.50
Spectral Acceleration for a 0.2-Second Period, S_{MS}	1.407g
Spectral Acceleration for a 1-Second Period, S_{M1}	0.812g
Design Short-Period Spectral Acceleration, S_{DS}	0.938g
Design 1-Second Spectral Acceleration, S_{D1}	0.541g

Site Preparation

Seasonal Limitations: Because the site is located within geologic hazard areas, the City imposes seasonal restrictions on construction work that may occur on the site. Specifically, land clearing, grading, filling, and foundation work in geologic hazard areas are not permitted between October 1 and April 1.

Erosion Control Measures: We recommend that silt fences, berms, and/or swales be installed around the downslope side of stripped areas and stockpiles in order to capture runoff water and sediment. Erosion control measures should be installed to meet City of Mercer Island requirements. If earthwork occurs during wet weather, we recommend that all stripped surfaces be covered with straw to reduce runoff erosion, whereas soil stockpiles should be protected with anchored plastic sheeting.

Temporary Drainage: Stripping, excavation, grading, and subgrade preparation should be performed in a manner and sequence that will provide drainage, erosion control, and protection of prepared subgrades. Site soils are fine-grained are highly susceptible to disturbance and erosion when wet. The site should be graded to prevent water from ponding in construction areas and flowing into excavations. Exposed grades should be crowned, sloped, and smooth-drum rolled at the end of each day to facilitate drainage if inclement weather is forecasted. Accumulated water must be removed from subgrades and work areas immediately and prior to performing further work in the area. Equipment access may be limited, and the amount of soil rendered unfit for use as structural fill may be greatly increased if drainage efforts are not accomplished in a timely manner.

Depending on the season of the work, groundwater seepage elevations may be higher or lower than observed at the time of drilling. We recommend that any excavations within groundwater seepage zones be undertaken only when suitable dewatering equipment and temporary excavation shoring are available, or where space is available to flatten the cut slopes. The appropriate type of dewatering system should be determined by the contractor based on the conditions encountered. Drainage measures, such as ditches and pumped sumps, could be employed to collect runoff and groundwater seepage, and reduce the risk of disturbance of the building subgrade.

Clearing and Stripping: The majority of the site includes a surficial mantle of forest duff and topsoil on the order of 6 to 12 inches thick. All tree stumps, root balls, and roots larger than ½ inch diameter should be cleared and grubbed from building, pavement, and hardscape areas. We anticipate that isolated areas of deeper stripping will be required to remove tree roots and organic-rich soils. Clearing and stripping should be limited to only those areas where work will occur. Efforts should be made to maintain existing site vegetation as erosion protection measures to the extent possible.

Subgrade Preparation: Once site preparation is complete, all areas that do not require over-excavation and are at design subgrade elevation or areas that will receive new structural fill should be compacted to a firm and unyielding condition. Moisture conditioning of site soils will likely be required to achieve a moisture content appropriate for compaction.

Because grading at the site will expose moisture-sensitive silty soils, we recommend that earthwork be completed during drier periods of the year when soil moisture content can be controlled by aeration and drying. If earthwork or construction activities take place during extended periods of wet weather, or if the in-situ moisture conditions are elevated above the optimum moisture content, the soils could become unstable or not be compactable. In the event the exposed subgrade becomes unstable, yielding, or unable to be compacted due to high moisture conditions, we recommend that the materials be removed to a sufficient depth in order to develop stable subgrade soils that can be compacted to the minimum recommended levels. The severity of construction problems will be dependent, in part, on the precautions that are taken by the contractor to protect the soils on the site from exposure to wet weather and erosion.

Once compacted, subgrades should be evaluated through density testing and probing by a qualified geotechnical engineer to assess the subgrade adequacy and to detect soft and/or yielding soils. In the event that compaction fails to meet the specified criteria, the upper 12 inches of subgrade should be scarified, and moisture conditioned as necessary to obtain at least 95 percent of the maximum laboratory density (per ASTM D1557). Those soils which are soft, yielding, or unable to be compacted to the specified criteria should be over-excavated and replaced with suitable material as recommended in the *Structural Fill* section of this report.

Freezing Conditions: If earthwork takes place during freezing conditions, all exposed subgrades should be allowed to thaw and then be compacted prior to placing subsequent lifts of structural fill. Alternatively, the frozen material could be stripped from the subgrade to expose unfrozen soil prior to placing

subsequent lifts of fill or foundation components. The frozen soil should not be reused as structural fill until allowed to thaw and adjusted to the proper moisture content, which may not be possible during winter months.

Structural Fill Materials and Preparation

Structural fill includes any material placed below foundations and pavement sections, within utility trenches, and behind retaining walls. Prior to the placement of structural fill, all surfaces to receive fill should be prepared as previously recommended in the *Site Preparation* section of this report.

Laboratory Testing: Representative samples of on-site and imported soils to be used as structural fill should be submitted for laboratory testing at least 4 days in advance of its intended use in order to complete the necessary Proctor tests.

Re-Use of Site Soils as Structural Fill: Soils observed in our borings within the expected excavation depths for the project generally consisted of sand with varying proportions of silt and gravel. Based on laboratory testing, site soils at the time of exploration appear to have moisture contents over the optimum moisture content for compaction. Re-use of site soils as structural fill will only be suitable during extended periods of dry weather. Even during dry weather, moisture conditioning consisting of drying site soils may be required for re-use as structural fill. We do not recommend use of site soils as backfill behind retaining walls. Recommendations for retaining wall backfill are presented below.

We recommend that site soils used as structural fill have less than 4 percent organics by weight and have no woody debris greater than ½ inch in diameter. We recommend that all pieces of organic material greater than ½ inch in diameter be picked out of the fill before it is compacted. Any organic-rich soil or fine-grained soil derived from earthwork activities should be utilized in landscape areas or wasted from the site.

Imported Structural Fill: Imported structural fill may be required due to weather or other reasons. The appropriate type of imported structural fill will depend on weather conditions. During extended periods of dry weather, imported fill meeting the requirements of Common Borrow as specified in Section 9-03.14(3) of the 2018 Washington State Department of Transportation, *Standard Specifications for Road, Bridge, and Municipal Construction* (WSDOT Standard Specifications) could be used for structural fill purposes. During wet weather, higher-quality structural fill might be required, as Common Borrow may contain sufficient fines to be moisture sensitive. During wet weather we recommend that imported structural fill meet the requirements of Gravel Borrow as specified in Section 9-03.14(1) of the WSDOT Standard Specifications.

Moisture Content: The suitability of soil for use as structural fill will depend on the time of year, the moisture content of the soil, and the fines content (that portion passing the U.S. No. 200 sieve) of the soil. As the amount of fines increases, the soil becomes increasingly sensitive to small changes in moisture content. Soils containing more than about 5 percent fines cannot be consistently compacted to the appropriate levels when the moisture content is more than approximately 2 percent above or below the optimum moisture content (per ASTM D1557). Optimum moisture content is that moisture content which

results in the greatest compacted dry density with a specified compactive effort. Soils used for structural fill should be placed at a moisture content within 2 percent of optimum.

Fill Placement: Structural fill should be placed in horizontal lifts not exceeding 8 inches in loose thickness. We recommend that each lift of fill be compacted using compaction equipment suitable for the soil type and lift thickness. Each lift of fill should be compacted to the minimum levels recommended below based on the maximum laboratory dry density as determined by the ASTM D1557 Modified Proctor Compaction Test and be within plus or minus 2 percent of optimum moisture content.

Compaction Criteria: Our recommendations for soil compaction are summarized in the following table. Structural fill for roadways and utility trenches in municipal rights-of-way should be placed and compacted in accordance with the jurisdiction codes and standards. We recommend that a geotechnical engineer be present during grading so that an adequate number of density tests may be conducted as structural fill placement occurs. In this way, the adequacy of the earthwork may be evaluated as it proceeds.

RECOMMENDED SOIL COMPACTION LEVELS	
Location	**Minimum Percent Compaction***
All fill below building floor slabs and foundations	95
Upper 2 feet of fill below pavements	95
Pavement fill below two feet	92
Retaining wall backfill less than 3 feet from wall	90
Retaining wall backfill more than 3 feet from wall	95
Upper two feet of utility trench backfill	95
Utility trenches below two feet	92
Landscape Areas	90
* *ASTM D1557 Modified Proctor Maximum Dry Density*	

Placing Fill on Slopes: Permanent fill placed on slopes steeper than 5H: 1V (Horizontal: Vertical) should be keyed and benched into natural soils of the underlying slope. We recommend that the base downslope key be cut into undisturbed native soil. The key slot should be at least 8 feet wide and 3 feet deep. The hillside benches cut into the native soil should be at least 4 feet in width. The face of the embankment should be compacted to the same relative compaction as the body of the fill. This may be accomplished by over-building the embankment and cutting back to the compacted core. Alternatively, the surface of the slope may be compacted as it is built, or upon completion of the embankment fill placement.

Utility Trenches

We recommend that utility trenching conform to all applicable federal, state, and local regulations, such as OSHA and WISHA, for open excavations. Trench excavation safety guidelines are presented in WAC Chapter 296-155 and WISHA RCW Chapter 49.17.

Utility Subgrade Preparation: We recommend that all utility subgrades be firm and unyielding and free of all soils that are loose, disturbed, or pumping. Such soils should be removed and replaced, if necessary. All structural fill used to replace over-excavated soils should be compacted as recommended in the *Structural Fill* section of this report.

If utility foundation soils are soft or loose, we recommend that they be over-excavated a minimum of 6 inches and replaced with compacted structural fill. Structures that extend into soft or loose soils should also be underlain by at least 6 inches of structural fill compacted to at least 90 percent of the modified Proctor maximum dry density. This granular material could consist of crushed rock, pit-run sand and gravel, or crushed concrete. Alternatively, quarry spalls or pea gravel could be used if groundwater seepage collects in the utility excavation.

Bedding: We recommend that a minimum of 4 inches of bedding material be placed above and below all utilities or in general accordance with the utility manufacturer's recommendations and local ordinances. We recommend that pipe bedding consist of Gravel Backfill for Pipe Zone Bedding as specified in Section 9-03.12(3) of the WSDOT Standard Specifications. All trenches should be wide enough to allow for compaction around the haunches of the pipe, or material such as pea gravel should be used below the spring line of the pipes to eliminate the need for mechanical compaction in this portion of the trenches. If water is encountered in the excavations, it should be removed prior to fill placement.

Trench Backfill: Materials, placement and compaction of utility trench backfill should be in accordance with the recommendations presented in the *Structural Fill* section of this report. In our opinion, the initial lift thickness should not exceed one foot unless recommended by the manufacturer to protect utilities from damage by compacting equipment. Light, hand operated compaction equipment may be utilized directly above utilities if damage resulting from heavier compaction equipment is of concern.

Temporary and Permanent Slopes

Temporary excavation slope stability is a function of many factors, including:

- The presence and abundance of groundwater;
- The type and density of the various soil strata;
- The depth of cut;
- Surcharge loadings adjacent to the excavation; and
- The length of time the excavation remains open.

As the cut is deepened, or as the length of time an excavation is open, the likelihood of bank failure increases; therefore, maintenance of safe slopes and worker safety should remain the responsibility of the contractor, who is present at the site, able to observe changes in the soil conditions, and monitor the performance of the excavation.

It is exceedingly difficult under the variable circumstances to pre-establish a safe and "maintenance-free" temporary cut slope angle. Therefore, it should be the responsibility of the contractor to maintain safe

temporary slope configurations since the contractor is continuously at the job site, able to observe the nature and condition of the cut slopes, and able to monitor the subsurface materials and groundwater conditions encountered. According to Chapter 296-155 of the Washington Administrative Code (WAC), the contractor should make a determination of excavation side slopes based on classification of soils encountered at the time of excavation.

Unsupported vertical slopes or cuts deeper than 4 feet are not recommended at this site. The cuts should be adequately sloped, shored, or supported to prevent injury to personnel from local sloughing and spalling. The excavation should conform to applicable Federal, State, and Local regulations. For planning purposes, we recommend that temporary cut slopes be no steeper than 1½H:1V. However, the actual cut slope configuration will be a function of the soil and groundwater seepage conditions encountered at the time of construction.

Temporary cuts may need to be constructed at flatter angles based upon the soil density and moisture, as well as groundwater conditions at the time of construction. Adjustments to the slope angles should be determined by the contractor at that time. Alternatively, temporary bracing could be used to support unstable cuts or cuts greater than 4 feet in height, as necessary. This may be necessary on the south end of the proposed residence where retaining wall construction will take place within about 6½ feet of the property line. If the proposed south retaining walls will rely on permanent lateral bracing from the new residence, it may be necessary to construct the walls after the house is built and upon which lateral support of temporary bracing could be derived. If not, the existing house could be used for lateral support of bracing (if it is necessary) and the wall could be constructed prior to the new residence.

We recommend that all permanent cut or fill slopes be designed at a 2½H:1V (Horizontal:Vertical) inclination or flatter. All permanent cut and fill slopes should be adequately protected from erosion both temporarily and permanently.

Stormwater Infiltration Feasibility

We understand that roof runoff from the existing home and carport is currently discharged to the ground via downspouts and the surface runoff from the asphalt pavement, sidewalks, and patio flows directly to landscape areas. We did not observe any surficial indications that the runoff has created any adverse conditions at the site. However, it is not possible to comment on the flow path of the runoff after it has soaked into the ground and its possible impacts to off-site, down-gradient areas.

While the sandy soils encountered at the project site would normally be considered adequate for stormwater infiltration, the City does not allow infiltrating LID facilities within erosion and landslide hazard areas and within 10 times the height of the erosion or landslide hazard area. Additionally, introduction of collected runoff into subsurface soils could have an adverse impact on slope stability to the west and/or south. ZGA is unable to determine what, if any, adverse impacts to down-gradient properties and drainage systems may occur as a result of infiltrating stormwater.

Temporary Shoring

The proposed building footprint will extend to within about 15 feet of the north and south property lines. Retaining walls and associated stairways are proposed on each end of the structure that will provide outside access between east and west sides of the residence will extend to within about 4½ to 10½ feet of the property lines. It appears that temporary cuts required to construct the walls and stairs will be possible. However, temporary shoring may be required in areas of the site where temporary cut slopes cannot be constructed due to differing subsurface conditions than those encountered in the borings.

Based on our understanding of subsurface soil and groundwater conditions, it appears that the most suitable temporary wall where a stable temporary cut cannot be constructed would be a soldier pile and lagging wall. Alternatively, temporary cuts less than about 5½ feet tall (and depending on the backslope configuration) could be supported with ecology block or Ultra Block walls.

Soldier pile and lagging walls consist of vertical elements (H or W section steel beams) typically installed in drilled shafts that extend below the bottom of the proposed cut. The shafts are backfilled below the bottom of the cut with structural or lean-mix concrete and above the bottom of the cut with controlled density fill (CDF). Once the concrete has hardened, the excavation proceeds and lagging (typically dimensional lumber for temporary applications) is installed between the flanges of the vertical elements to support the cut as the excavation extends down. Soldier pile and lagging walls are typically cantilever-type to a maximum exposed height of about 10 to 15 feet.

The shoring design criteria presented in this report should be used by the shoring designer to design an appropriate shoring system. The shoring design should be reviewed by Zipper Geo Associates, LLC for conformance with design criteria presented herein. It is generally not the purpose of this report to provide specific criteria for construction methods, materials or procedures for shoring. It should be the responsibility of the shoring designer and contractor to verify the subsurface conditions prior to bidding and select appropriate materials and methods for design and construction.

Soldier Pile Shoring and Lagging Design Parameters

The design of shoring is generally accomplished using empirical relationships and apparent earth pressure distributions. These earth pressure distributions or envelopes do not represent the precise distribution of earth pressures but rather constitute hypothetical pressures from which tieback loads can be calculated which would not likely be exceeded in the excavation. Additionally, pressures must be selected to limit deflections, both vertical and horizontal, of nearby settlement sensitive structures, roadways and utilities. The design of soldier pile and lagging shoring should allow for lateral pressures exerted by the adjacent soil, surcharge loads from the adjacent building, and other surcharges such as traffic, construction materials, crane pad loads, or temporary soil stockpiles adjacent to the excavation.

Design of soldier pile shoring should be based on either “active” or “at-rest” lateral earth pressures, depending on the degree of deformation of the shoring that can be tolerated. Lateral wall movement for soldier pile shoring designed using active earth pressure averages approximately 0.2 percent of the wall height to a maximum of about 0.5 percent of the wall height. The lateral movement is typically

accompanied by vertical movement of about 0.15 percent to 0.5 percent of the wall height with the maximum occurring immediately behind the wall face and trending to zero at a distance of roughly two times the wall height. If no structures are located within this active zone, or if any structural elements within the zone are considered to be insensitive to this degree of settlement, then it would be appropriate to design utilizing active earth pressures.

An assumed "at-rest" earth pressure condition theoretically assumes no movement of the soil behind the shoring, however, some settlement should realistically be anticipated due to construction practices and/or the fact that it is not possible to construct a perfectly stiff shoring system. Shored excavations adjacent to buildings do invite a certain amount of risk. Since the selection of shoring techniques and criteria affect the level of risk, we recommend that the final selection of shoring design criteria (i.e. active or at-rest earth pressures) be made by the owner in conjunction with the structural engineer and other design team members.

The attached Figure 5, Soldier Pile Shoring Design Parameters, provides our recommendations for cantilever soldier pile shoring design. Figure 5 also provides recommendations for active earth pressures, passive resistance, anchor bond, axial capacities, and lagging recommendations. Geometric recommendations including no-load zone, minimum bond lengths and embedment depths are also provided. Figure 6, Lateral Pressure Diagrams, provides pressure diagrams for lateral earth pressures resulting from vertical surcharges behind shoring walls. We recommend that the traffic surcharge be modelled as an equivalent 2-foot thick soil surcharge. Construction of soldier pile shoring walls should be in accordance with Section 6-16 of the WSDOT Standard Specifications.

When caving soil conditions are encountered in soldier pile excavations, we recommend the contractor case or otherwise stabilize the excavation in general accordance with WSDOT Standard Specification Section 6-16.3(3), Shaft Excavation. We also recommend that shaft backfilling be completed in general accordance with WSDOT Standard Specification Section 6-16.3(5), Backfilling Shaft, particularly with respect to when water is present in the excavations.

We recommend timber lagging, or some other form of retention, be installed between all soldier piles. Due to soil arching effects, lagging may be designed for 30 percent of the lateral earth pressure used for shoring design. Prompt and careful installation of lagging would reduce potential loss of ground. The requirements for lagging should be made the responsibility of the shoring subcontractor to prevent soil failure, sloughing, and loss of ground. Proper installation of lagging is critical to provide safe working conditions. We recommend that any voids between the lagging and soil be backfilled promptly. However, the backfill should not allow potential hydrostatic pressure to build-up behind the wall. Drainage behind the wall must be maintained.

Shoring Wall Monitoring Plan

Any time an excavation is made below the level of neighboring properties, existing utilities or other structures, there is risk of damage even if a well-designed shoring system has been planned. If there are

settlement-sensitive structures or facilities located within a horizontal distance of two times the wall height, we recommend a shoring monitoring program be implemented.

In order to establish the pre-construction conditions of the area around the wall, we recommend that the owner and/or representatives make a complete inspection and evaluation of the area around the proposed excavation. This inspection should be directed towards detecting any existing signs of damage, particularly those caused by settlement or lateral movement. The observations should be documented by pictures, notes, survey drawings, or other means of verification. The contractor also should establish for their own records the existing conditions prior to construction.

The monitoring program should include measurements of the horizontal and vertical movements of the shoring system and any settlement sensitive structures within a zone equal to the wall height. Reference points for horizontal movement should also be placed at the tops of the soldier piles.

The measuring system used for shoring monitoring should have an accuracy of at least 0.01-foot. All reference points on the existing structures should be installed and readings taken prior to commencing the excavation. All reference points should be read prior to and during critical stages of construction when the piles are not braced by the structure. The frequency of readings will depend on the results of previous readings and the rate of construction. As a minimum, readings should be taken at least once a week throughout construction until the permanent walls are completed up to the ground level. All readings should be reviewed by the geotechnical and structural engineers.

Building Foundations

Based on subsurface conditions encountered in our borings and our analysis, it is our opinion the proposed home can be adequately supported on conventional shallow spread footings. However, some remedial subgrade preparation may be necessary where loose or organic-rich soils are encountered.

Foundation Subgrade Preparation: We expect that soils encountered at foundation subgrade elevation will consist of loose to medium dense sand with varying proportions of silt and gravel. In order to provide adequate, uniform foundation support, we recommend that any loose or organic-rich soils be completely over-excavated and replaced with structural fill. The excavation should extend laterally away from each side of the footing a minimum of 8 inches for each foot the excavation extends vertically below the bottom of the foundation if compacted structural fill is used. Alternatively, if CDF is used, the excavation should extend laterally away from each side of the footing a minimum of 6 inches, regardless of the depth of over-excavation. We recommend that CDF have a minimum compressive strength of 150 psi. The prepared foundation subgrade should be observed by a representative of ZGA prior to placement of any structural fill, formwork or reinforcing steel. Once over-excavation is complete, we recommend that the exposed subgrade be compacted to at least 92 percent of the maximum dry density as determined by the ASTM D1557 test method and to a firm and unyielding condition. Achieving this level of compaction may require moisture conditioning of the soils consisting of scarifying and drying. After compacting the exposed subgrade, the excavation should be backfilled with structural fill. The backfill should be placed

and compacted in accordance with the recommendations presented in the *Structural Fill* section of this report.

Allowable Bearing Pressure and Settlements: For foundations supported on undisturbed medium dense native soil or compacted structural fill, we recommend using an allowable bearing pressure of 2,000 pounds per square foot (psf). A one-third increase of the above-recommended bearing pressure may be used for short-term transient loads such as wind and seismic forces. Assuming the foundation subgrade soils are prepared in accordance with recommendations presented herein, we estimate that total settlement will be less than ¾ of an inch and the differential settlement will be less than half the total settlement over a span of 40 feet.

Shallow Foundation Depth and Width: For frost protection, the bottom of all exterior footings should bear at least 18 inches below the lowest adjacent outside grade, whereas the bottoms of interior footings should bear at least 12 inches below the surrounding slab surface level. We recommend that all continuous wall and isolated column footings be at least 12 and 24 inches wide, respectively.

Lateral Resistance: We recommend using allowable base friction and passive earth values of 0.35 and 250 pcf equivalent fluid pressure (triangular distribution), respectively, which incorporate a factor of safety of 1.5. We recommend that passive resistance be neglected in the upper 18 inches of embedment.

Backfilled Retaining Walls

Lateral Earth Pressures: The lateral soil pressures acting on backfilled retaining walls will depend on the nature and density of the soil behind the wall, and the ability of the wall to yield in response to the earth loads. Yielding walls (i.e. walls that are free to translate or rotate) that are able to displace laterally at least 0.001H, where H is the height of the wall, may be designed for active earth pressures. Non-yielding walls (i.e. walls that are not free to translate or rotate) should be designed for at-rest earth pressures. Non-yielding walls include walls that are braced to another wall or structure, and wall corners.

Assuming that walls are backfilled and drained as described in the following paragraphs, we recommend that yielding walls supporting horizontal backfill be designed using an equivalent fluid density of 35 pcf (active earth pressure). Non-yielding walls should be designed using an equivalent fluid density of 50 pcf (at-rest earth pressure).

Design of permanent retaining walls should consider additional earth pressure resulting from the design seismic event. For the seismic case, yielding and non-yielding walls should be designed for an additional uniform, seismic earth pressure distribution of 5H and 10H, respectively.
The above-recommended lateral earth pressures do not include the effects of sloping backfill surfaces, surcharges such as traffic loads, other surface loading, or hydrostatic pressures. If such conditions exist, we should be consulted to provide revised earth pressure recommendations.

Adequate drainage measures must be installed to collect and direct subsurface water away from subgrade walls. Backfill should include a drainage aggregate zone extending 18 inches from the back of wall for the

full height of the wall. The drainage aggregate should consist of material meeting the requirements of WSDOT 9-03.12(2) Gravel Backfill for Walls. We recommend that a minimum 4-inch diameter, perforated PVC drain pipe be provided at the base of backfilled walls to collect and direct groundwater seepage to an appropriate discharge point. The drain pipe invert should be at footing subgrade level, and at least 1 foot below the interior slab elevation. The drain pipe should be provided with cleanouts to allow for maintenance. Drain pipe perforations should be protected using a non-woven filter fabric such as Mirafi 140N. Wall drainage systems should be independent of other drainage systems such as roof drains.

Considering that perched groundwater was encountered in boring B-3 above the basement floor level of the proposed residence, we recommend that the backfilled wall be protected by additional waterproofing and drainage, to supplement the granular backfill described above. Additional drainage should consist of a continuous blanket of prefabricated drainage geocomposite (such as Miradrain), tied into the perforated drainpipe at the wall base. Waterproofing should be provided, adhered to the concrete wall. We recommend the use of continuous sheet or panel waterproofing systems applied by an experienced installer able to provide a warranty.

On-Grade Concrete Slabs

We anticipate the garage will have an on-grade concrete floor slab. Subgrade for the slab should be prepared in accordance with the *Site Preparation* and *Structural Fill* sections of this report.

Subgrade Conditions and Preparation:
Undisturbed native soils and structural fill compacted to the minimum recommended levels are suitable for support of slab on grade floors. Subgrades should be prepared in accordance with the recommendations presented in the Subgrade Preparation section of this report.

Slab Base: To provide a uniform slab bearing surface, we recommend the on-grade slabs be underlain by a 6-inch thick layer of compacted crushed rock meeting the requirements of Crushed Surfacing Top Course as specified in Section 9-03.9(3) of the WSDOT Standard Specifications, with the limitation that the percent passing the No. 200 sieve be less than 5 percent.

Alternatively, we recommend constructing on-grade slabs above a minimum 6-inch thick layer of compacted granular fill consisting of coarse sand and fine gravel containing less than 5 percent fines, based on that soil fraction passing the US No. 4 sieve. Other options would be to use Type 22 or Type 24 crushed aggregate as specified in the 2017 City of Seattle Standard Specifications.

Vapor Barrier: We recommend that a vapor barrier be placed between the slab base material and all interior floor slabs. We recommend the barrier be a minimum of 15-mil thick and have taped, overlapping joints.

Subgrade Modulus: For the design of on-grade concrete slabs supported on compacted structural fill or medium dense native soil, we recommend using a vertical modulus of subgrade reaction of 200 pounds per cubic inch.

Permanent Erosion Control and Drainage Considerations

Exposed site soils are highly susceptible to erosion. We recommend permanent erosion control measures be incorporated into the project design. These measures should address the following concerns:

- Surface Water Drainage Control: Final site grades should be sloped to carry surface water away from the house and other drainage-sensitive areas in a manner that prevents concentration of surface water flow. Additionally, site grades should be designed such that concentrated runoff on softscape surfaces is avoided. Any surface runoff directed towards softscaped slopes should be collected at the top of the slope and routed to the bottom of the slope or other suitable discharge location. Collected surface water drainage should be discharged in a manner that prevents erosion.

- Permanent Stabilization of Exposed Site Soils: Soils exposed during construction should be stabilized by permanent seeding and planting. If slopes are exposed to prolonged rainfall before vegetation becomes established, the surficial soils will be prone to erosion and possible shallow sloughing. We recommend covering permanent slopes with a rolled erosion protection material, such as jute matting or Curlex II, if vegetation has not been established by the regional wet season (typically October through March).

CLOSURE

The conclusions and recommendations presented in this report are based, in part, on the observations, field and laboratory tests, and explorations completed for this study. The tests and explorations were completed within the constraints of budget and site access so as to yield the information to formulate our findings. This report has been prepared for the exclusive use of Edward Talerman, and his agents, for specific application to the subject project location and stated purpose and has been prepared in accordance with generally accepted geotechnical engineering practices. No warranties, express or implied, are intended or made. In the event that changes in the site conditions as outlined in this report, the conclusions and recommendation contained in this report shall not be considered valid unless ZGA reviews the changes and either verifies or modifies the conclusions of this report in writing.

We appreciate the opportunity to be of service to you on this project and would be pleased to discuss the contents of this report or other aspects of the project with you at your convenience. Please call if you have any questions or need additional information.

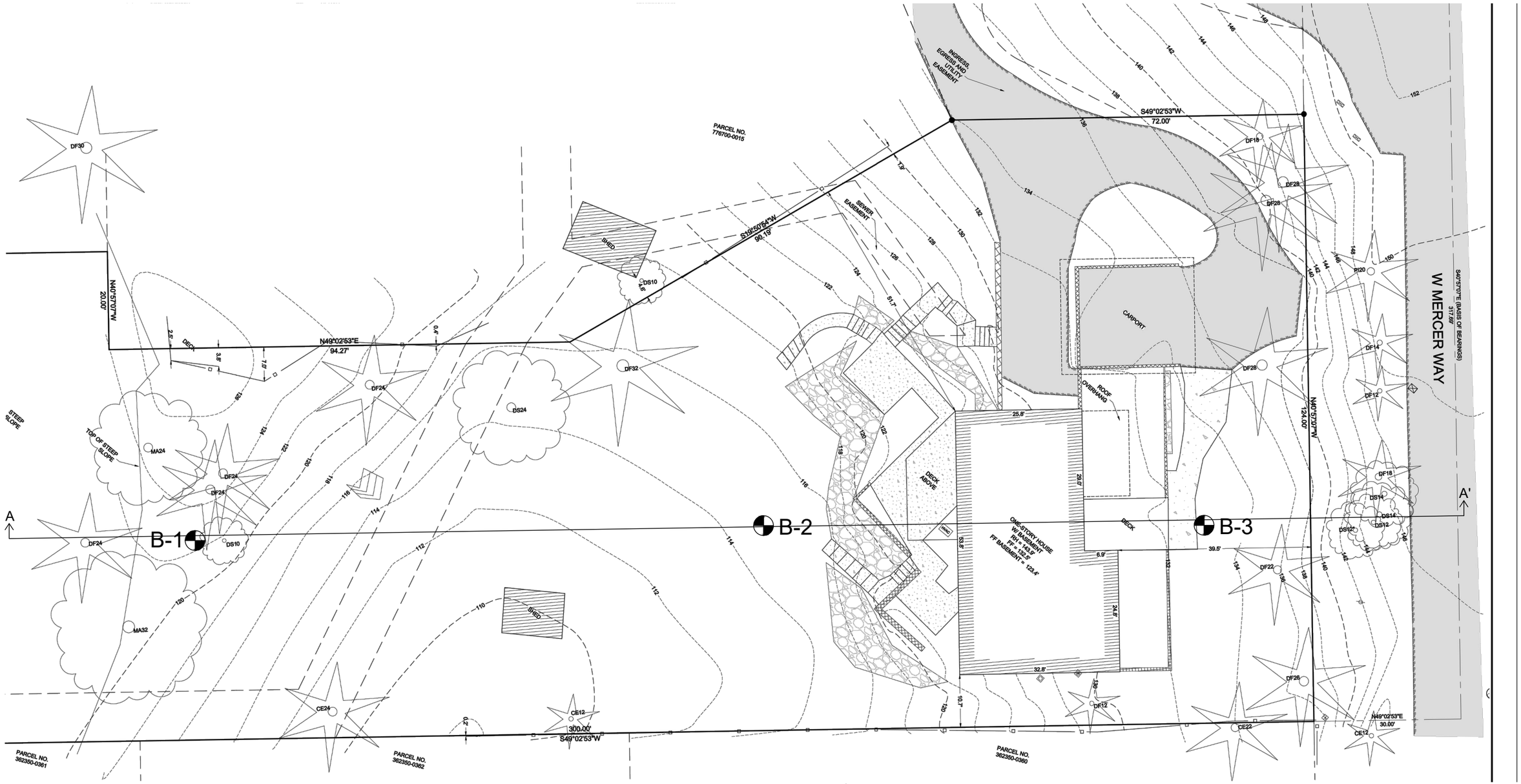

EXPLANATION

B-1 BORING NUMBER AND APPROXIMATE LOCATION

A A' GENERALIZED SUBSURFACE PROFILE APPROXIMATE LOCATION AND DESIGNATION

20 0 10 20
SCALE IN FEET

REFERENCE: TOPOGRAPHIC SURVEY BY SITE SURVEYING, INC., DATED: 9/8/17

Talerman Residence
3879 West Mercer Way
Mercer Island, Washington

SITE AND EXPLORATION PLAN

DATE: FEBRUARY 2018 | Job No. 1945.01

Zipper Geo Associates, LLC
19019 36th Ave. W.,Suite E
Lynnwood, WA

FIGURE 1
SHT. 1 of 1

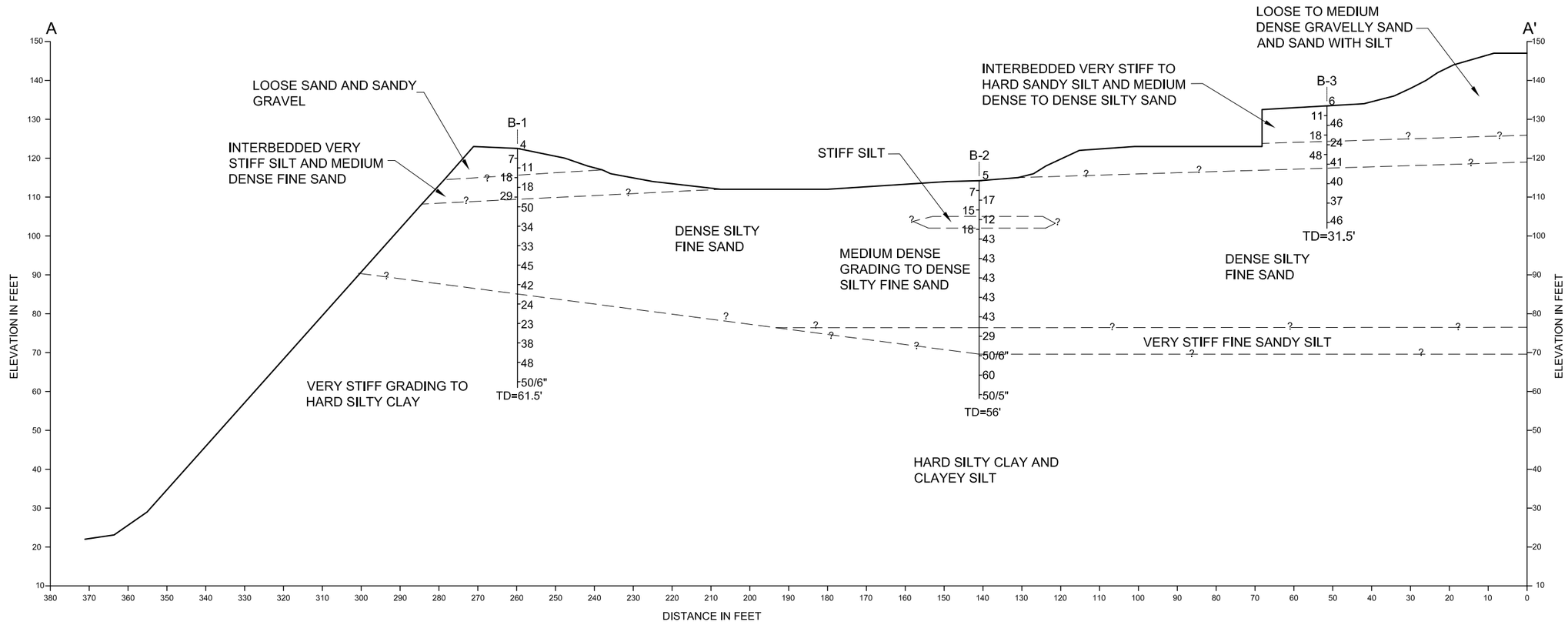

GENERALIZED CROSS SECTION LEGEND

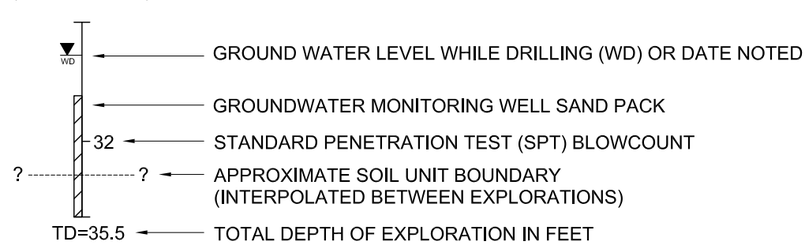

TALERMAN RESIDENCE
3879 WEST MERCER WAY
MERCER ISLAND, WASHINGTON

GENERALZED CROSS SECTION A - A'

DATE: FEBRUARY 2018 | Job No. 1945.01

Zipper Geo Associates, LLC
19019 36th Ave. W.,Suite E
Lynnwood, WA

FIGURE 2
SHT.1 of 1

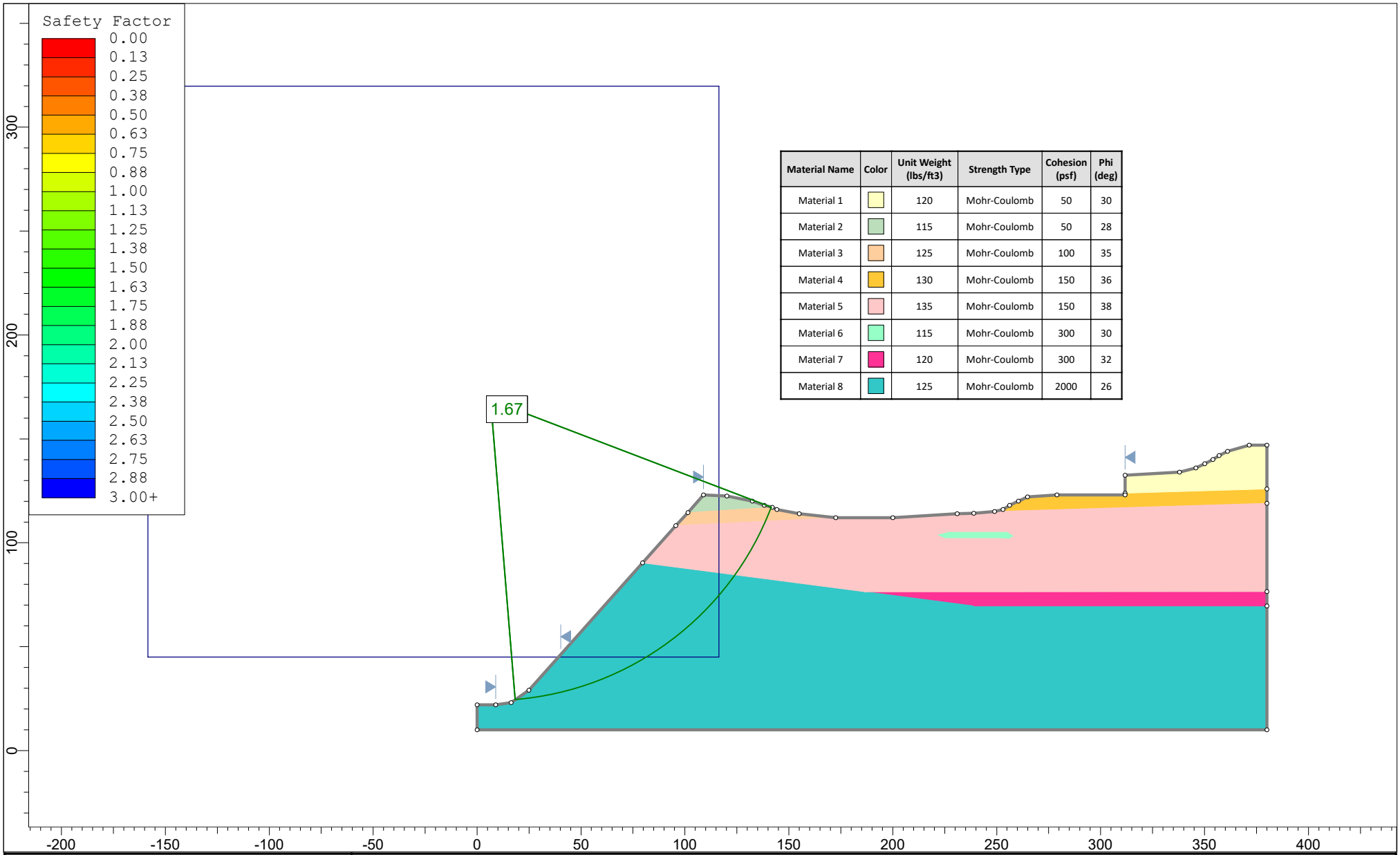

Material Name	Color	Unit Weight (lbs/ft3)	Strength Type	Cohesion (psf)	Phi (deg)
Material 1		120	Mohr-Coulomb	50	30
Material 2		115	Mohr-Coulomb	50	28
Material 3		125	Mohr-Coulomb	100	35
Material 4		130	Mohr-Coulomb	150	36
Material 5		135	Mohr-Coulomb	150	38
Material 6		115	Mohr-Coulomb	300	30
Material 7		120	Mohr-Coulomb	300	32
Material 8		125	Mohr-Coulomb	2000	26

Zipper Geo Associates, LLC	*Project*	Talerman Residence		
	Analysis Description	Figure 3, Static Slope Stability Analysis A-A'		
	Drawn By JPG	*Scale* 1:766	*Company*	Zipper Geo Associates, LLC
	Date 1/30/2018, 3:50:54 PM		*File Name*	Talerman Static Analysis.slim

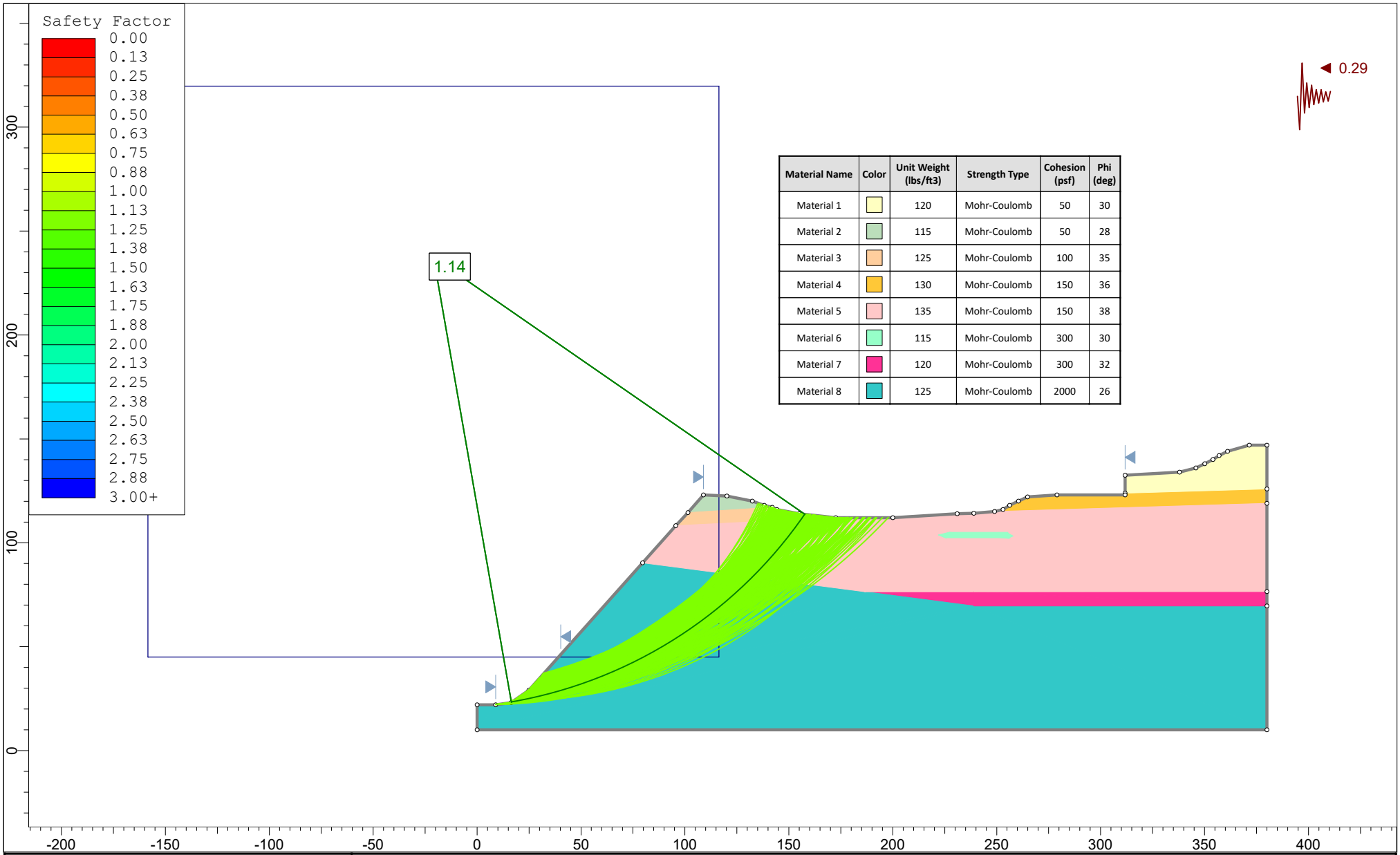

Material Name	Color	Unit Weight (lbs/ft3)	Strength Type	Cohesion (psf)	Phi (deg)
Material 1		120	Mohr-Coulomb	50	30
Material 2		115	Mohr-Coulomb	50	28
Material 3		125	Mohr-Coulomb	100	35
Material 4		130	Mohr-Coulomb	150	36
Material 5		135	Mohr-Coulomb	150	38
Material 6		115	Mohr-Coulomb	300	30
Material 7		120	Mohr-Coulomb	300	32
Material 8		125	Mohr-Coulomb	2000	26

Zipper Geo Associates, LLC	*Project*	Talerman Residence		
	Analysis Description	Figure 4, Pseudostatic Slope Stability Analysis A-A'		
	Drawn By JPG	*Scale* 1:766	*Company*	Zipper Geo Associates, LLC
	Date	1/30/2018, 3:50:54 PM	*File Name*	Talerman Pseudostatic Analysis.slim

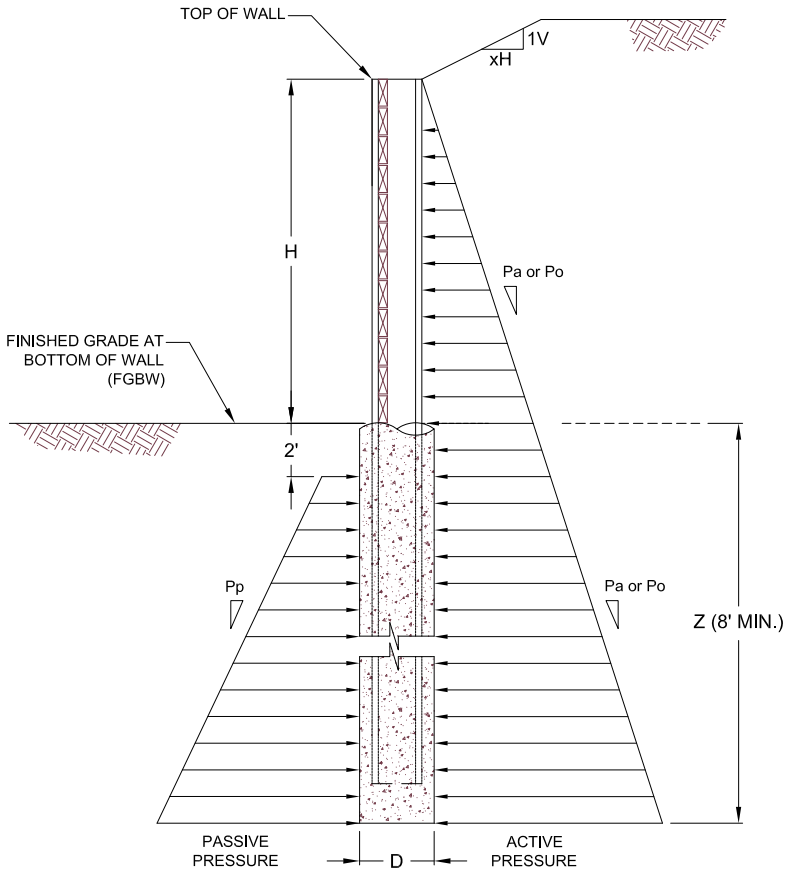

CANTILEVER PRESSURE DIAGRAM

NOTES:

1. EMBEDMENT (Z) SHOULD SATISFY FORCE AND MOMENT EQUILIBRIUM.
2. PASSIVE EARTH PRESSURE VALUES SHOWN INCLUDE A 1.5 SAFETY FACTOR.
3. APPLY ACTIVE, AT-REST, AND SURCHARGE PRESSURES OVER THE FULL WIDTH OF THE PILE SPACING ABOVE THE BASE OF THE EXCAVATION AND OVER ONE PILE DIAMETER BELOW THE BASE OF THE EXCAVATION.
4. APPLY PASSIVE PRESSURES OVER THREE TIMES THE PILE DIAMETER (D) BELOW THE BASE OF THE EXCAVATION PROVIDED LEAN MIX CONCRETE WITH A MINIMUM COMPRESSIVE STRENGTH OF 50 PSI IS USED TO BACKFILL THE SHAFTS.
5. DESIGN LAGGING FOR 30 PERCENT OF THE ACTIVE PRESSURES BETWEEN PILES ABOVE THE BASE OF THE EXCAVATION.

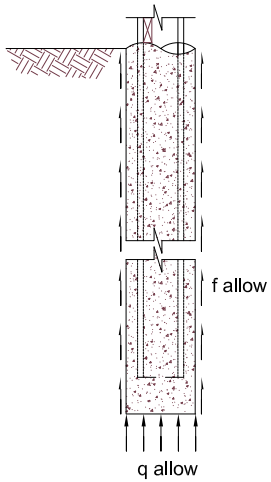

SOLIDER PILE
AXIAL CAPACITY

SOLDIER PILE SHORING DESIGN PARAMETERS						
ROWS OF TIE BACKS	BACKSLOPE	ACTIVE EARTH PRESSURE, Pa (pcf)	AT-REST EARTH PRESSURE, Po (pcf)	ALLOWABLE PASSIVE PRESSURE RESISTANCE, Pp (pcf)	ALLOWABLE SKIN FRICTION, f allow (tsf)	ALLOWABLE END BEARING, q allow (tsf)
SINGLE/NONE	LEVEL	35	50	350	1.0	16

TALERMAN RESIDENCE
3879 WEST MERCER WAY
MERCER ISLAND, WASHINGTON

SOLIDER PILE SHORING
DESIGN PARAMETERS

FEBRUARY 2018 | Job No. 1945.01

Zipper Geo Associates, LLC
19019 36th Ave. W.,Suite E
Lynnwood, WA

FIGURE 5
SHT. 1 of 1

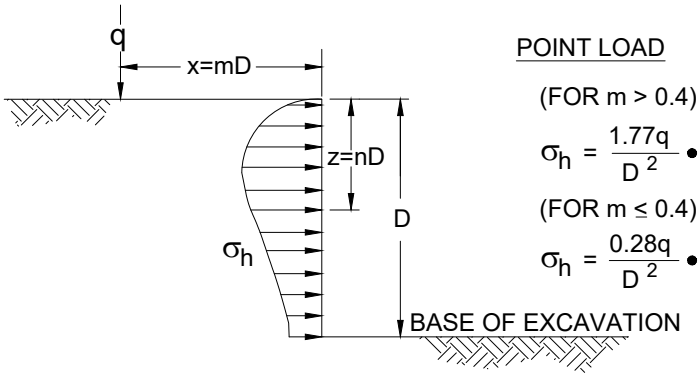

POINT LOAD

(FOR m > 0.4)

$$\sigma_h = \frac{1.77q}{D^2} \bullet \frac{m^2 n^2}{(m^2 + n^2)^3}$$

(FOR m ≤ 0.4)

$$\sigma_h = \frac{0.28q}{D^2} \bullet \frac{n^2}{(0.16 + n^2)^3}$$

$$\sigma'_h = \sigma_h \cos^2 (1.1 * \Theta)$$

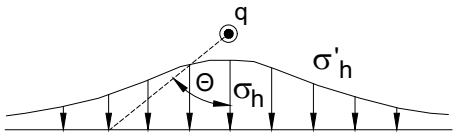

PLAN VIEW OF WALL

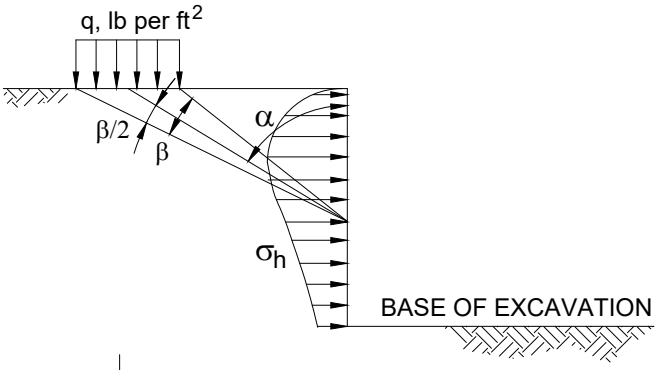

STRIP LOADING PARALLEL TO EXCAVATION

$$\sigma_h = \frac{2q}{\pi} (\beta - \sin \beta \cos 2\alpha)$$

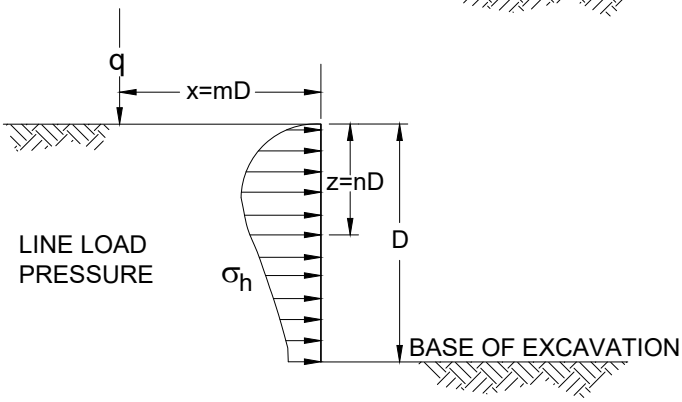

LINE LOAD

(FOR m > 0.4)

$$\sigma_h = \frac{1.28q}{D} \bullet \frac{m^2 n}{(m^2 + n^2)^2}$$

(FOR m ≤ 0.4)

$$\sigma_h = \frac{q}{D} \bullet \frac{0.2n}{(0.16 + n^2)^2}$$

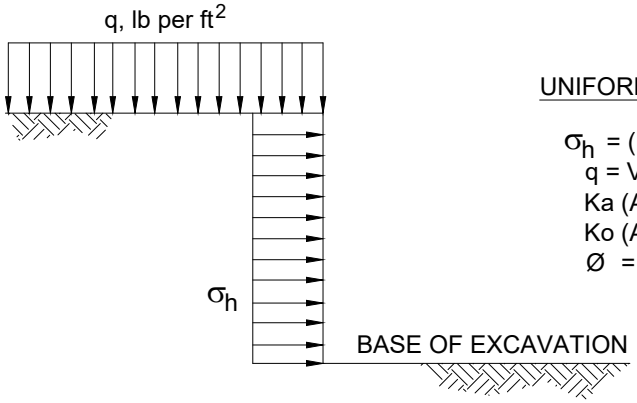

UNIFORM LOAD DISTRIBUTION

σ_h = (Ka or Ko) q
q = Vertical pressure in psf
Ka (Active) = Tan²(45 - Ø/2)
Ko (At Rest) = 1 - Sin Ø
Ø = 43° (SOIL UNIT 1) 30° (SOIL UNIT 2)

TALERMAN RESIDENCE 3879 WEST MERCER WAY MERCER ISLAND, WASHINGTON	
LATERAL PRESSURES FROM SURCHARGE LOADS	
FEBRUARY 2018	Job No. 1945.01
Zipper Geo Associates, LLC 19019 36th Ave. W.,Suite E Lynnwood, WA	FIGURE 6 SHT. 1 of 1

APPENDIX A

SUBSURFACE EXPLORATION PROCEDURES & LOGS

APPENDIX A

SUBSURFACE EXPLORATION PROCEDURES AND LOGS

Field Exploration Description

Our field exploration for this project included 3 borings (B-1 through B-3) completed on January 16 and 17, 2018. The approximate exploration locations are presented on the Site and Exploration Plan, Figure 1. The boring locations were determined using visual observation and a tape measure. The exploration locations and elevations should be considered accurate only to the degree implied by the means and methods used to define them.

Boring Procedures

The borings were advanced using a limited access track-mounted drill rig operated by a drilling company working under subcontract to ZGA. The borings were advanced using hollow stem auger drilling methods. An engineering geologist from our firm continuously observed the borings, logged the subsurface conditions encountered, and obtained representative soil samples. All samples were stored in moisture-tight containers and transported to our laboratory for further evaluation and testing.

Samples were obtained by means of the Standard Penetration Test at 2.5- to 5-foot intervals throughout the drilling operation. The Standard Penetration Test (ASTM: D-1586) procedure consists of driving a standard 2-inch outside diameter steel split spoon sampler 18 inches into the soil with a 140-pound hammer free falling 30 inches. The number of blows required to drive the sampler through each 6-inch interval is recorded, and the total number of blows struck during the final 12 inches is recorded as the Standard Penetration Resistance, or “blow count” (N value). If a total of 50 blows is struck within any 6-inch interval, the driving was stopped, and the blow count is recorded as 50 blows for the actual penetration distance. The resulting Standard Penetration Resistance values indicate the relative density of granular soils and the relative consistency of cohesive soils.

The enclosed boring logs describe the vertical sequence of soils and materials encountered in each boring, based primarily upon our field classifications. Where a soil contact was observed to be gradational, our logs indicate the average contact depth. Where a soil type changed between sample intervals, we inferred the contact depth. Our logs also graphically indicate the blow count, sample type, sample number, and approximate depth of each soil sample obtained from the boring. If groundwater was encountered in a borehole, the approximate groundwater depth, and date of observation, are depicted on the log.

Boring Location:	See Figure 1, Site and Exploration Plan	Drilling Company:	Geologic Drill	Bore Hole Dia.:	6 in.
Top Elevation:	Approx. 122 feet	Drilling Method:	Hollow Stem Auger	Hammer Type:	Cathead
Date Drilled:	1/16/2018	Drill Rig:	Mini-Track	Logged by:	JST

B-1

Depth (ft)	SOIL DESCRIPTION	Sample Number	SAMPLES Recovery	Ground Water	PENETRATION RESISTANCE (blows/foot)	Blow Counts	Testing
0	4 inches of very loose, moist, black, SAND with abundant organics. (Topsoil)	S-1	8"			4	
	Very loose, moist, dark brown, sandy GRAVEL, some silt, abundant organics.						
	Loose, moist to wet, gray with light brown mottling, SAND with gravel and silt.	S-2	10"			7	GSA
5	Medium dense, wet, gray with light brown mottling, SAND, trace silt.	S-3	11"			11	MC
	Very stiff, damp to moist, gray, SILT, with fine sand, few vertical orange mottling, decayed organics in vertical orientation.	S-4	12"			18	
10	Very stiff, damp, gray with few vertically oriented orange layers less than 1/16-inch thick, SILT, some sand, some decayed organics in near vertical orientation.	S-5	16"			18	
	Medium dense, damp, gray, fine SAND, interbedded with dense, damp, gray with light brown mottling, SILT, some sand.	S-6	18"			29	
	Drilling slows at 14 feet.						
15	Dense, damp, gray with light brown mottling, silty SAND.	S-7	18"			50	
20	Dense, moist, gray with few traces of orange, silty fine SAND.	S-8	18"			34	
25							

The stratification lines represent the approximate boundaries between soil types. The transition may be gradual. Refer to report text and appendices for additional information.

PENETRATION RESISTANCE (blows/foot): ▲ Standard Penetration Test; △ Hammer Weight and Drop: _____; 0, 20, 40, 60

SAMPLE LEGEND

- 2-inch O.D. split spoon sample
- 3-inch I.D. Shelby tube sample

GROUNDWATER LEGEND

- Clean Sand
- Bentonite
- Grout/Concrete
- Screened Casing
- Blank Casing
- ▼ Groundwater level at time of drilling (ATD) or on date of measurement. 11/2/12

◇ % Fines (<0.075 mm)

○ % Water (Moisture) Content

Plastic Limit ⊢—○—⊣ Liquid Limit

Natural Water Content

TESTING KEY

GSA = Grain Size Analysis

200W = 200 Wash Analysis

Consol. = Consolidation Test

Att. = Atterberg Limits

Talerman Residence
3879 West Mercer Way
Mercer Island, WA 98040

Date: January 2018 Project No.: 1945.01

Zipper Geo Associates
19019 36th Ave. W, Suite E
Lynnwood, WA

BORING LOG: B-1

Boring Location:	See Figure 1, Site and Exploration Plan	Drilling Company:	Geologic Drill	Bore Hole Dia.:	6 in.	**B-1**
Top Elevation:	Approx. 122 feet	Drilling Method:	Hollow Stem Auger	Hammer Type:	Cathead	
Date Drilled:	1/16/2018	Drill Rig:	Mini-Track	Logged by:	JST	

Depth (ft)	SOIL DESCRIPTION	Sample Number	SAMPLES Recovery	Ground Water	PENETRATION RESISTANCE (blows/foot)	Blow Counts	Testing
	The stratification lines represent the approximate boundaries between soil types. The transition may be gradual. Refer to report text and appendices for additional information.				▲ Standard Penetration Test △ Hammer Weight and Drop: _____ 0 20 40 60		
25	Dense, damp to moist, gray, silty fine SAND.	S-9	18"			33	
30	Dense, moist, gray, silty fine SAND.	S-10	18"			45	MC
35	Dense, damp to moist, gray, finely laminated silty fine SAND.	S-11	18"			42	MC
	Few gravels at 38 feet.						
40	Very stiff, moist, gray, silty CLAY, trace fine sand.	S-12	18"			24	Att
45	Very stiff, moist to wet, gray, finely laminated silty CLAY.	S-13	18"			23	
50							

SAMPLE LEGEND

- 2-inch O.D. split spoon sample
- 3-inch I.D. Shelby tube sample

GROUNDWATER LEGEND

- Clean Sand
- Bentonite
- Grout/Concrete
- Screened Casing
- Blank Casing
- ▼ Groundwater level at time of drilling (ATD) or on date of measurement. 11/2/12

◇ % Fines (<0.075 mm)

○ % Water (Moisture) Content

Plastic Limit ⊢—○—⊣ Liquid Limit

Natural Water Content

TESTING KEY

GSA = Grain Size Analysis

200W = 200 Wash Analysis

Consol. = Consolidation Test

Att. = Atterberg Limits

Talerman Residence
3879 West Mercer Way
Mercer Island, WA 98040

Date: January 2018 Project No.: 1945.01

Zipper Geo Associates
19019 36th Ave. W, Suite E
Lynnwood, WA

BORING LOG: B-1

Boring Location:	See Figure 1, Site and Exploration Plan	Drilling Company:	Geologic Drill	Bore Hole Dia.:	6 in.	**B-1**
Top Elevation:	Approx. 122 feet	Drilling Method:	Hollow Stem Auger	Hammer Type:	Cathead	
Date Drilled:	1/16/2018	Drill Rig:	Mini-Track	Logged by:	JST	

Depth (ft)	SOIL DESCRIPTION	Sample Number	SAMPLES Recovery	Ground Water	PENETRATION RESISTANCE (blows/foot)	Blow Counts	Testing
	The stratification lines represent the approximate boundaries between soil types. The transition may be gradual. Refer to report text and appendices for additional information.				▲ Standard Penetration Test △ Hammer Weight and Drop: _____ 0 20 40 60		
50	Hard, moist to wet, gray, silty CLAY.	S-14	18"		▲	38	
55	Hard, moist to wet, gray, silty CLAY.	S-15	18"		▲	48	
60	Hard, wet, gray, silty CLAY.	S-16	18"		○ ▲	50/6"	MC
	Boring completed at about 61 1/2 feet. No groundwater observed at time of drilling.						
65							
70							
75							

SAMPLE LEGEND

- 2-inch O.D. split spoon sample
- 3-inch I.D. Shelby tube sample

GROUNDWATER LEGEND

- Clean Sand
- Bentonite
- Grout/Concrete
- Screened Casing
- Blank Casing
- ▼ Groundwater level at time of drilling (ATD) or on date of measurement. 11/2/12

◇ % Fines (<0.075 mm)

○ % Water (Moisture) Content

Plastic Limit ├──○──┤ Liquid Limit

Natural Water Content

TESTING KEY

GSA = Grain Size Analysis

200W = 200 Wash Analysis

Consol. = Consolidation Test

Att. = Atterberg Limits

Talerman Residence
3879 West Mercer Way
Mercer Island, WA 98040

Date: January 2018 Project No.: 1945.01

Zipper Geo Associates
19019 36th Ave. W, Suite E
Lynnwood, WA

BORING LOG: B-1

Boring Location:	See Figure 1, Site and Exploration Plan	Drilling Company:	Geologic Drill	Bore Hole Dia.:	6 in.	**B-2**
Top Elevation:	Approx. 115 feet	Drilling Method:	Hollow Stem Auger	Hammer Type:	Cathead	
Date Drilled:	1/17/2018	Drill Rig:	Mini-Track	Logged by:	JST	

Depth (ft)	SOIL DESCRIPTION	Sample Number	SAMPLES Recovery	Ground Water	PENETRATION RESISTANCE (blows/foot)	Blow Counts	Testing
	The stratification lines represent the approximate boundaries between soil types. The transition may be gradual. Refer to report text and appendices for additional information.				▲ Standard Penetration Test; △ Hammer Weight and Drop: _____ (0, 20, 40, 60)		
0	Sod over loose, wet, brown, silty SAND, abundant organics.	S-1	12"			5	
	Loose, moist to wet, gray with orange-brown mottling, sandy SILT.						
	Loose, wet, light brown with some orange-brown mottling, silty SAND, some gravel.	S-2	10"			7	GSA
5	Medium dense, wet, light brown with gray and orange mottling, silty SAND with gravel.	S-3	10"			17	MC
	Medium dense, moist, light brown, silty SAND, some gravel.	S-4	8"			15	MC
10	Stiff, moist to wet, light brown, SILT, some fine sand, trace gravel.	S-5	14"			12	MC
	Medium dense, moist to wet, light brown, silty fine SAND, trace gravel.	S-6	10"	▼ ATD		18	GSA
	Medium dense, moist to wet, light brown, SAND, with silt, trace gravel. Perched groundwater from about 14 to 15 feet.						
15	Dense, wet, light brown, silty fine SAND.	S-7	14"			43	MC
20	Dense, moist to wet, gray, silty fine SAND.	S-8	18"			43	GSA
25							

SAMPLE LEGEND

- 2-inch O.D. split spoon sample
- 3-inch I.D. Shelby tube sample

GROUNDWATER LEGEND

- Clean Sand
- Bentonite
- Grout/Concrete
- Screened Casing
- Blank Casing
- ▼ Groundwater level at time of drilling (ATD) or on date of measurement. 11/2/12

◇ % Fines (<0.075 mm)

○ % Water (Moisture) Content

Plastic Limit ⊢—○—⊣ Liquid Limit

Natural Water Content

TESTING KEY

GSA = Grain Size Analysis

200W = 200 Wash Analysis

Consol. = Consolidation Test

Att. = Atterberg Limits

Talerman Residence
3879 West Mercer Way
Mercer Island, WA 98040

Date: January 2018 Project No.: 1945.01

Zipper Geo Associates
19019 36th Ave. W, Suite E
Lynnwood, WA

BORING LOG: B-2

Boring Location:	See Figure 1, Site and Exploration Plan	Drilling Company:	Geologic Drill	Bore Hole Dia.:	6 in.
Top Elevation:	Approx. 115 feet	Drilling Method:	Hollow Stem Auger	Hammer Type:	Cathead
Date Drilled:	1/17/2018	Drill Rig:	Mini-Track	Logged by:	JST

B-2

Depth (ft)	SOIL DESCRIPTION	Sample Number	SAMPLES Recovery	Ground Water	PENETRATION RESISTANCE (blows/foot)	Blow Counts	Testing
	The stratification lines represent the approximate boundaries between soil types. The transition may be gradual. Refer to report text and appendices for additional information.				▲ Standard Penetration Test △ Hammer Weight and Drop: _____ (0, 20, 40, 60)		
25	Dense, moist, gray, silty fine SAND.	S-9	18"			43	
30	Dense, moist, gray, silty fine SAND.	S-10	18"			43	MC
35	Dense, moist, gray, silty fine SAND.	S-11	18"			43	
40	Very stiff, moist to wet, gray, fine sandy SILT.	S-12	18"			29	MC
45	Hard, moist, gray, silty CLAY interbedded with fine sand.	S-13	12"			50/6"	Att
50							

SAMPLE LEGEND

- 2-inch O.D. split spoon sample
- 3-inch I.D. Shelby tube sample

GROUNDWATER LEGEND

- Clean Sand
- Bentonite
- Grout/Concrete
- Screened Casing
- Blank Casing
- ▼ Groundwater level at time of drilling (ATD) or on date of measurement. 11/2/12

◇ % Fines (<0.075 mm)

○ % Water (Moisture) Content

Plastic Limit ├──○──┤ Liquid Limit

Natural Water Content

TESTING KEY

GSA = Grain Size Analysis

200W = 200 Wash Analysis

Consol. = Consolidation Test

Att. = Atterberg Limits

Talerman Residence
3879 West Mercer Way
Mercer Island, WA 98040

Date: January 2018 Project No.: 1945.01

Zipper Geo Associates
19019 36th Ave. W, Suite E
Lynnwood, WA

BORING LOG: B-2

Boring Location:	See Figure 1, Site and Exploration Plan	Drilling Company:	Geologic Drill	Bore Hole Dia.:	6 in.	**B-2**
Top Elevation:	Approx. 115 feet	Drilling Method:	Hollow Stem Auger	Hammer Type:	Cathead	
Date Drilled:	1/17/2018	Drill Rig:	Mini-Track	Logged by:	JST	

Depth (ft)	SOIL DESCRIPTION	Sample Number	SAMPLES Recovery	Ground Water	PENETRATION RESISTANCE (blows/foot)	Blow Counts	Testing
	The stratification lines represent the approximate boundaries between soil types. The transition may be gradual. Refer to report text and appendices for additional information.				▲ Standard Penetration Test △ Hammer Weight and Drop: _____ 0 20 40 60		
50	Hard, moist, gray, silty CLAY, some sand.	S-14	18"			60	MC
55	Hard, moist, gray, silty CLAY, some sand and gravel.	S-15	11"			50/5"	
	Boring completed at about 56 feet. Perched groundwater observed from about 14 to 15 feet.						
60							
65							
70							
75							

SAMPLE LEGEND

- 2-inch O.D. split spoon sample
- 3-inch I.D. Shelby tube sample

GROUNDWATER LEGEND

- Clean Sand
- Bentonite
- Grout/Concrete
- Screened Casing
- Blank Casing
- ▼ Groundwater level at time of drilling (ATD) or on date of measurement. 11/2/12

◇ % Fines (<0.075 mm)

○ % Water (Moisture) Content

Plastic Limit ├──○──┤ Liquid Limit

Natural Water Content

TESTING KEY

GSA = Grain Size Analysis

200W = 200 Wash Analysis

Consol. = Consolidation Test

Att. = Atterberg Limits

Talerman Residence
3879 West Mercer Way
Mercer Island, WA 98040

Date: January 2018 Project No.: 1945.01

Zipper Geo Associates
19019 36th Ave. W, Suite E
Lynnwood, WA

BORING LOG: B-2

Boring Location:	See Figure 1, Site and Exploration Plan	Drilling Company:	Geologic Drill	Bore Hole Dia.:	6 in.	**B-3**
Top Elevation:	Approx. 134 feet	Drilling Method:	Hollow Stem Auger	Hammer Type:	Cathead	
Date Drilled:	1/17/2018	Drill Rig:	Mini-Track	Logged by:	JST	

Depth (ft)	SOIL DESCRIPTION	Sample Number	SAMPLES Recovery	Ground Water	PENETRATION RESISTANCE (blows/foot)	Blow Counts	Testing
0	Dark brown/black organic SAND with gravel. (Garden Topsoil)	S-1	4"			6	
	Loose, wet, brown, gravelly SAND.						
	Medium dense, wet, light brown, SAND, with silt and gravel.	S-2	6"			11	MC
5	Medium dense, saturated, light brown, SAND, with gravel, some silt. (Pushing gravel, blow counts overstated) Perched groundwater observed between about 5 and 8 feet.	S-3	12"	ATD		46	GSA
	Medium dense, saturated, light brown, fine SAND, with silt.						
	Medium dense, wet, light brown, fine sandy SILT.	S-4	18"			18	
10	Medium dense, saturated, light brown with orange-brown mottling, silty SAND, interbedded with very stiff SILT, trace sand. Perched groundwater observed between about 10 and 12 feet.	S-5	18"	ATD		24	MC
	Dense, wet, orange-brown, SAND with silt.						
	Dense, moist, gray mottled with light brown, SILT, some sand, interbedded with dense, moist, light brown, silty SAND.	S-6	18"			48	MC
15	Dense, wet, gray, silty SAND.	S-7	18"			41	
20	Dense, wet, gray, silty SAND.	S-8	18"			40	GSA
25							

The stratification lines represent the approximate boundaries between soil types. The transition may be gradual. Refer to report text and appendices for additional information.

PENETRATION RESISTANCE (blows/foot): ▲ Standard Penetration Test; △ Hammer Weight and Drop: _____; 0, 20, 40, 60

SAMPLE LEGEND

- 2-inch O.D. split spoon sample
- 3-inch I.D. Shelby tube sample

GROUNDWATER LEGEND

- Clean Sand
- Bentonite
- Grout/Concrete
- Screened Casing
- Blank Casing
- ▼ Groundwater level at time of drilling (ATD) or on date of measurement. (11/2/12)

◇ % Fines (<0.075 mm)

○ % Water (Moisture) Content

Plastic Limit ├──○──┤ Liquid Limit

Natural Water Content

TESTING KEY

GSA = Grain Size Analysis

200W = 200 Wash Analysis

Consol. = Consolidation Test

Att. = Atterberg Limits

Talerman Residence
3879 West Mercer Way
Mercer Island, WA 98040

Date: January 2018 Project No.: 1945.01

Zipper Geo Associates
19019 36th Ave. W, Suite E
Lynnwood, WA

BORING LOG: B-3

Boring Location:	See Figure 1, Site and Exploration Plan	Drilling Company:	Geologic Drill	Bore Hole Dia.:	6 in.
Top Elevation:	Approx. 134 feet	Drilling Method:	Hollow Stem Auger	Hammer Type:	Cathead
Date Drilled:	1/17/2018	Drill Rig:	Mini-Track	Logged by:	JST

B-3

Depth (ft)	SOIL DESCRIPTION	Sample Number	SAMPLES Recovery	Ground Water	PENETRATION RESISTANCE (blows/foot)	Blow Counts	Testing
	The stratification lines represent the approximate boundaries between soil types. The transition may be gradual. Refer to report text and appendices for additional information.				▲ Standard Penetration Test △ Hammer Weight and Drop: _____ 0 20 40 60		
25	Dense, wet, gray, silty SAND.	S-9	18"			37	MC
30	Dense, wet, gray, silty SAND.	S-10	18"			46	MC
	Boring completed at about 31 1/2 feet. Perched groundwater encountered between about 5 and 8 feet and between about 10 and 12 feet ATD.						
35							
40							
45							
50							

SAMPLE LEGEND

- 2-inch O.D. split spoon sample
- 3-inch I.D. Shelby tube sample

GROUNDWATER LEGEND

- Clean Sand
- Bentonite
- Grout/Concrete
- Screened Casing
- Blank Casing
- ▼ Groundwater level at time of drilling (ATD) or on date of measurement. 11/2/12

◇ % Fines (<0.075 mm)

○ % Water (Moisture) Content

Plastic Limit ├──○──┤ Liquid Limit

Natural Water Content

TESTING KEY

GSA = Grain Size Analysis

200W = 200 Wash Analysis

Consol. = Consolidation Test

Att. = Atterberg Limits

Talerman Residence
3879 West Mercer Way
Mercer Island, WA 98040

Date: January 2018 Project No.: 1945.01

Zipper Geo Associates
19019 36th Ave. W, Suite E
Lynnwood, WA

BORING LOG: B-3

APPENDIX B

LABORATORY TESTING PROCEDURES & RESULTS

APPENDIX B
LABORATORY TESTING PROCEDURES AND RESULTS

A series of laboratory tests were performed by ZGA during the course of this study to evaluate the index and geotechnical engineering properties of the subsurface soils. Descriptions of the types of tests performed are given below.

Visual Classification

Samples recovered from the exploration locations were visually classified in the field during the exploration program. Representative portions of the samples were carefully packaged in moisture tight containers and transported to our laboratory where the field classifications were verified or modified as required. Visual classification was generally done in accordance with ASTM D2488. Visual soil classification includes evaluation of color, relative moisture content, soil type based upon grain size, and accessory soil types included in the sample. Soil classifications are presented on the exploration logs in Appendix A.

Moisture Content Determinations

Moisture content determinations were performed on representative samples obtained from the explorations in order to aid in identification and correlation of soil types. The determinations were made in general accordance with the test procedures described in ASTM D 2216. Moisture contents are presented on the exploration logs in Appendix A.

Grain Size Analysis

A grain size analysis indicates the range in diameter of soil particles included in a particular sample. Grain size analyses were performed on representative samples in general accordance with ASTM D-422. The results of the grain size determinations for the samples were used in classification of the soils and are presented in this appendix.

Atterberg Limits

Atterberg limits are used primarily for classification and indexing of cohesive soils. The liquid and plastic limits are two of the five Atterberg limits and are defined as the moisture content of a cohesive soil at arbitrarily established limits for liquid and plastic behavior, respectively. Liquid and plastic limits were established for selected samples in general accordance with ASTM D4318. The results of the Atterberg limits are presented on a plasticity chart in this appendix where the plasticity index (liquid limit minus plastic limit) is related to the liquid limit.

RESULTS OF ATTERBERG LIMITS TESTS

ASTM D4318

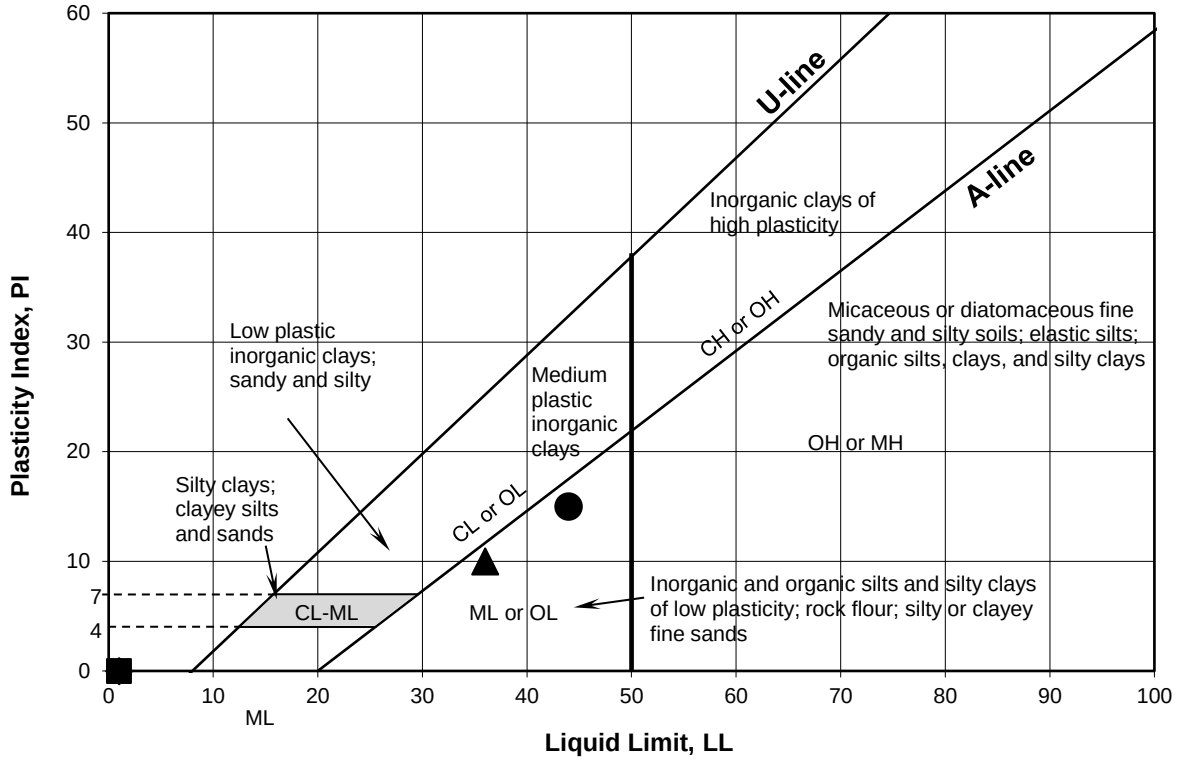

Symbol	Boring	Sample	Depth (ft.)	USCS Description	Received Moisture Content (%)	Liquid Limit	Plastic Limit	Plasticity Index
●	B-1	S-12	40-41.5		29	44	29	15
▲	B-2	S-13	45-46.5	ML	30	36	26	10

Comments:

Results presented on chart per ASTM D2487

Zipper Geo Associates, LLC Geotechnical and Environmental Consultants 19019 36th Ave. West, Suite E Lynnwood, WA 98036	PROJECT NO: 1945.01 DATE OF TESTING: 1/19/2018	PROJECT NAME: Talerman Residence

GRAIN SIZE ANALYSIS

Test Results Summary

ASTM D 422

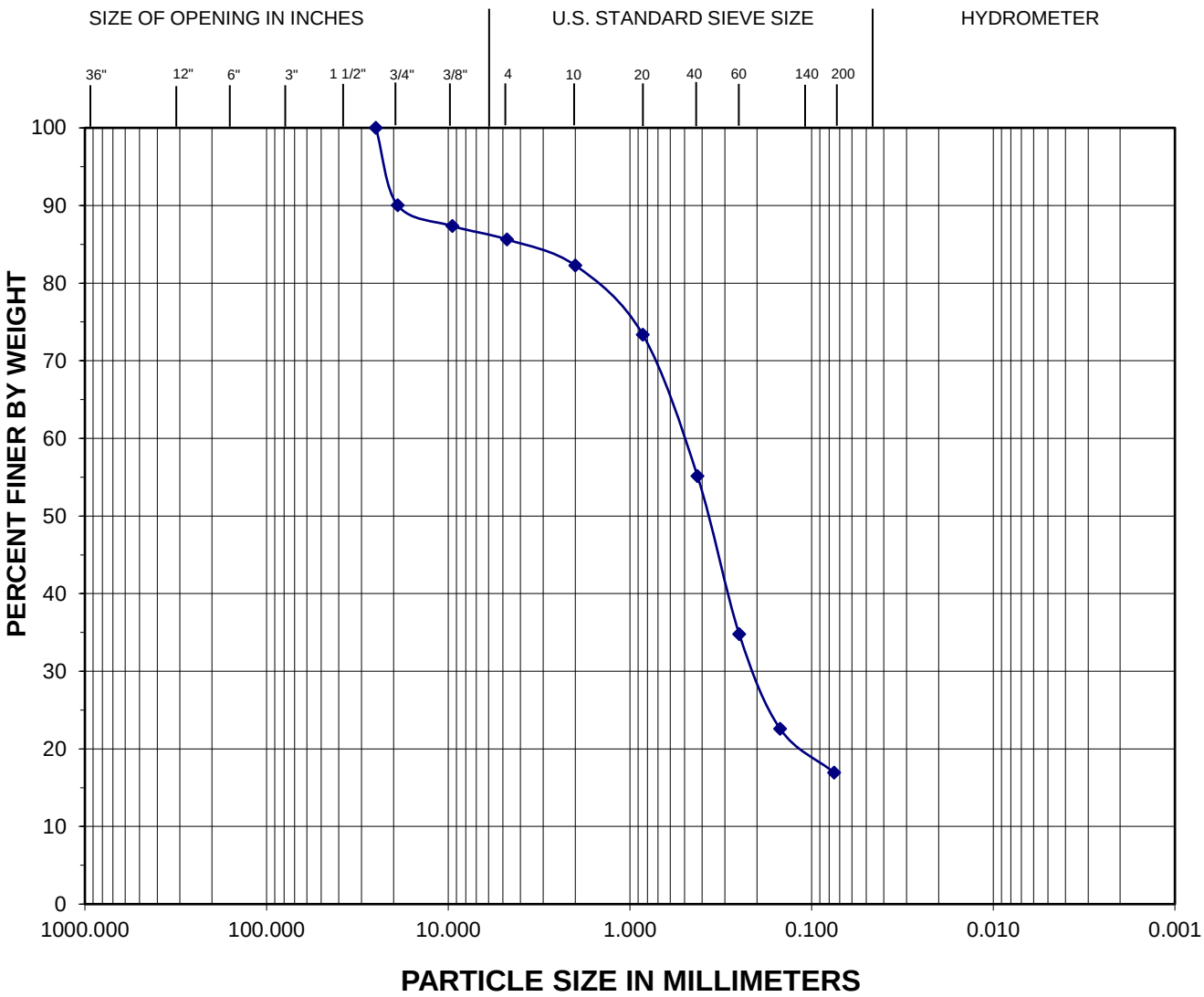

		Coarse	Fine	Coarse	Medium	Fine	Silt	Clay
BOULDERS	COBBLES	GRAVEL		SAND			FINE GRAINED	

Comments:

Exploration	Sample	Depth (feet)	Moisture (%)	Fines (%)	Description
B-1	S-2	2.5-4	11.5	16.9	SAND,with silt and gravel

Zipper Geo Associates, LLC Geotechnical and Environmental Consultants	Project No.: 1945.01 DATE OF TESTING: 1/29/2018	PROJECT NAME: Talerman Residence

GRAIN SIZE ANALYSIS

Test Results Summary

ASTM D 422

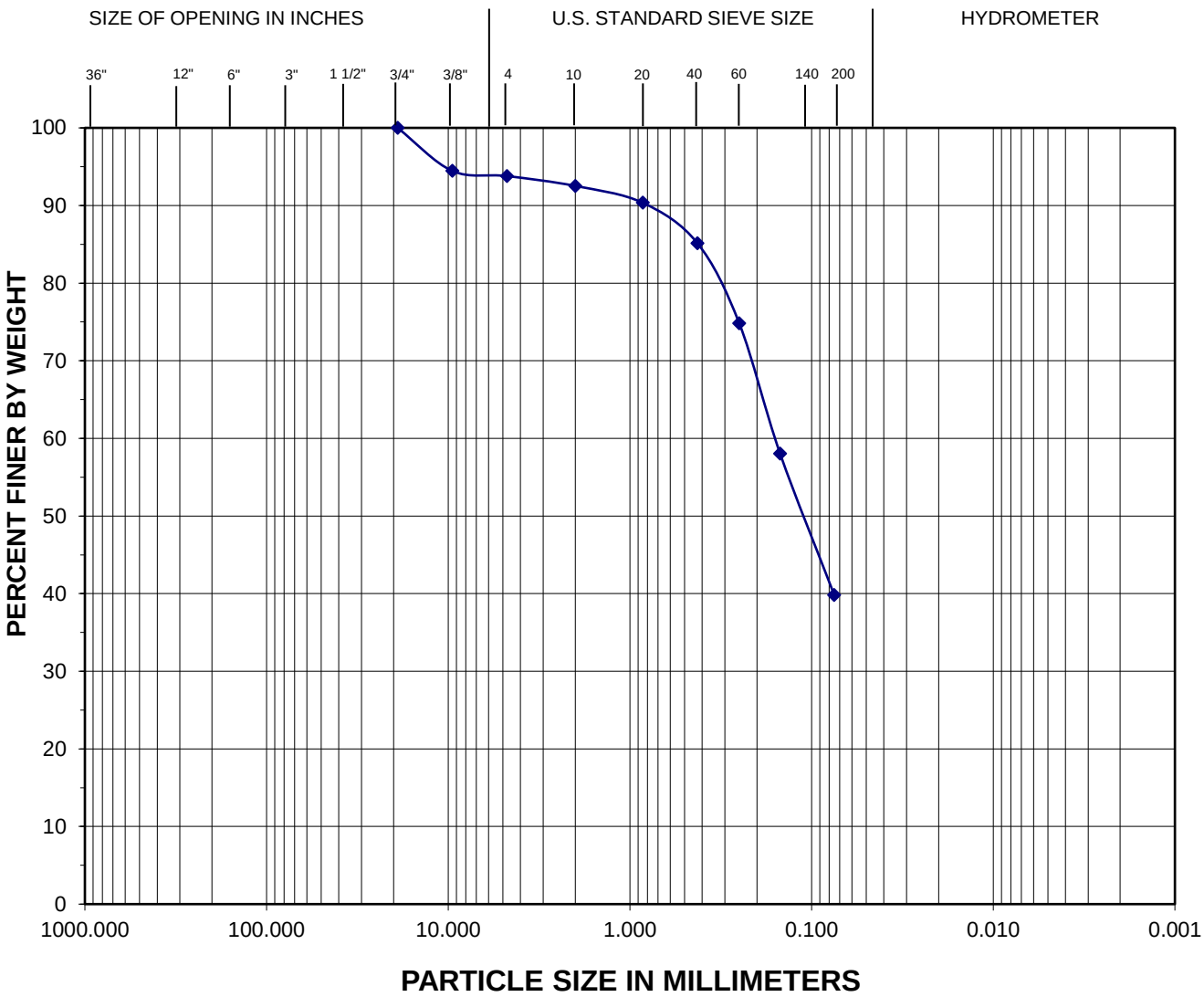

		Coarse	Fine	Coarse	Medium	Fine	Silt	Clay
BOULDERS	COBBLES	GRAVEL		SAND			FINE GRAINED	

Comments:

Exploration	Sample	Depth (feet)	Moisture (%)	Fines (%)	Description
B-2	S-2	2.5-4	18.1	39.8	Silty SAND, some gravel

Zipper Geo Associates, LLC Geotechnical and Environmental Consultants	Project No.: 1945.01 DATE OF TESTING: 1/29/2018	PROJECT NAME: Talerman Residence

GRAIN SIZE ANALYSIS

Test Results Summary

ASTM D 422

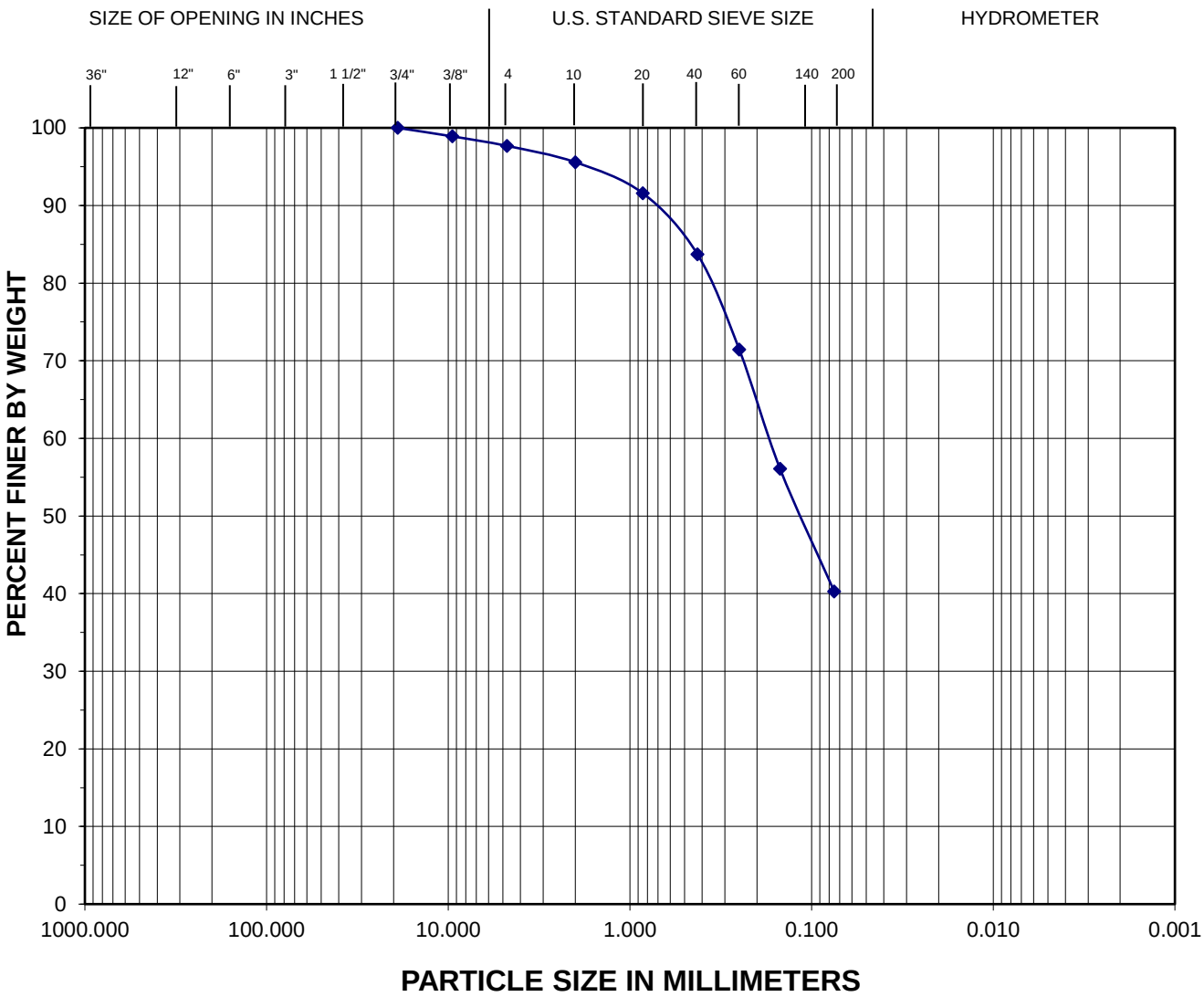

		Coarse	Fine	Coarse	Medium	Fine	Silt	Clay
BOULDERS	COBBLES	GRAVEL		SAND			FINE GRAINED	

Comments:

Exploration	Sample	Depth (feet)	Moisture (%)	Fines (%)	Description
B-2	S-6	12.5-14	22.2	40.3	Silty SAND, trace gravel

Zipper Geo Associates, LLC Geotechnical and Environmental Consultants	Project No.: 1945.01 DATE OF TESTING: 1/29/2018	PROJECT NAME: Talerman Residence

GRAIN SIZE ANALYSIS

Test Results Summary

ASTM D 422

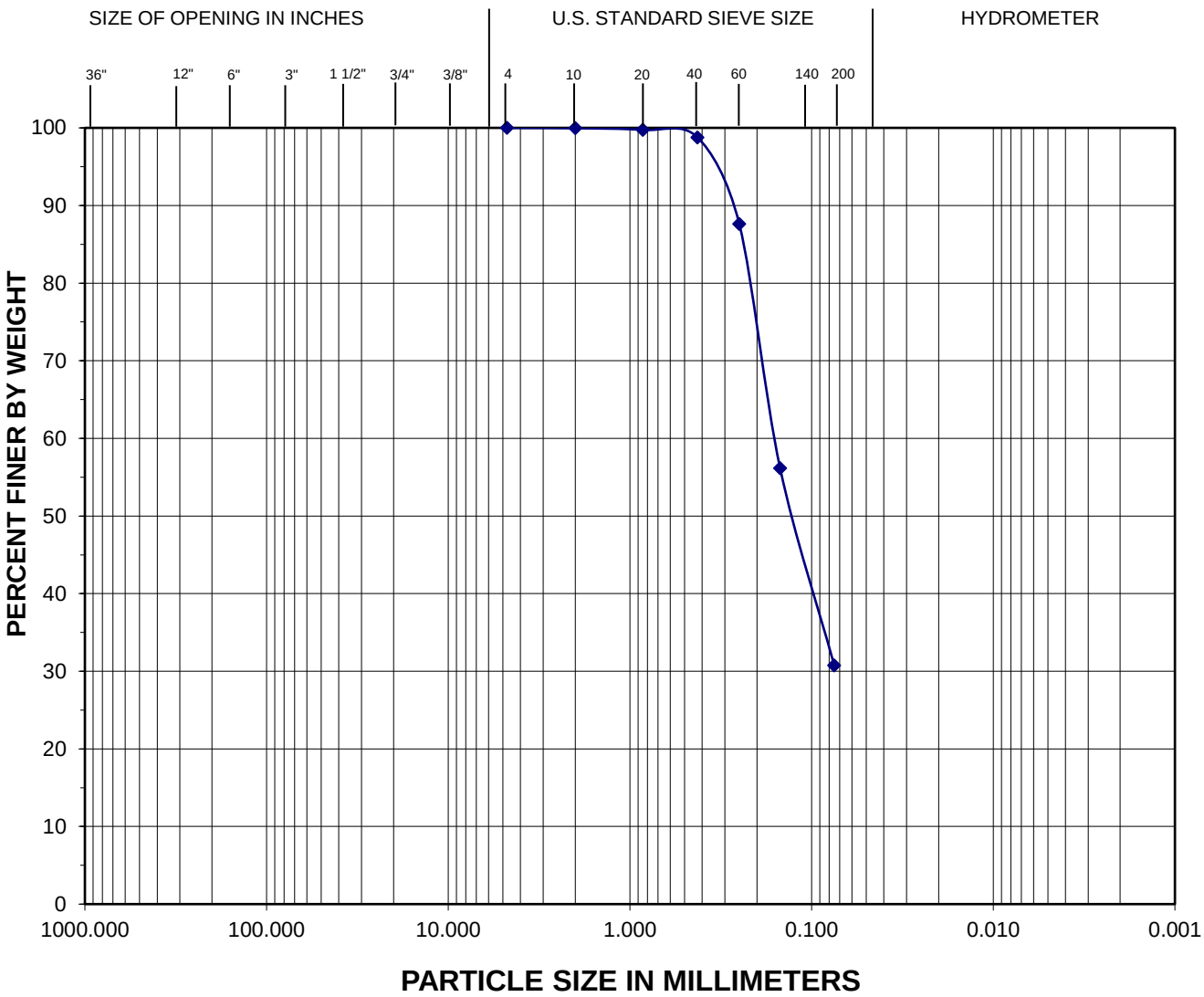

		Coarse	Fine	Coarse	Medium	Fine	Silt	Clay
BOULDERS	COBBLES	GRAVEL		SAND			FINE GRAINED	

Comments:

Exploration	Sample	Depth (feet)	Moisture (%)	Fines (%)	Description
B-2	S-8	20-21.5	16.0	30.7	Silty SAND

Zipper Geo Associates, LLC Geotechnical and Environmental Consultants	Project No.: 1945.01 DATE OF TESTING: 1/29/2018	PROJECT NAME: Talerman Residence

GRAIN SIZE ANALYSIS

Test Results Summary

ASTM D 422

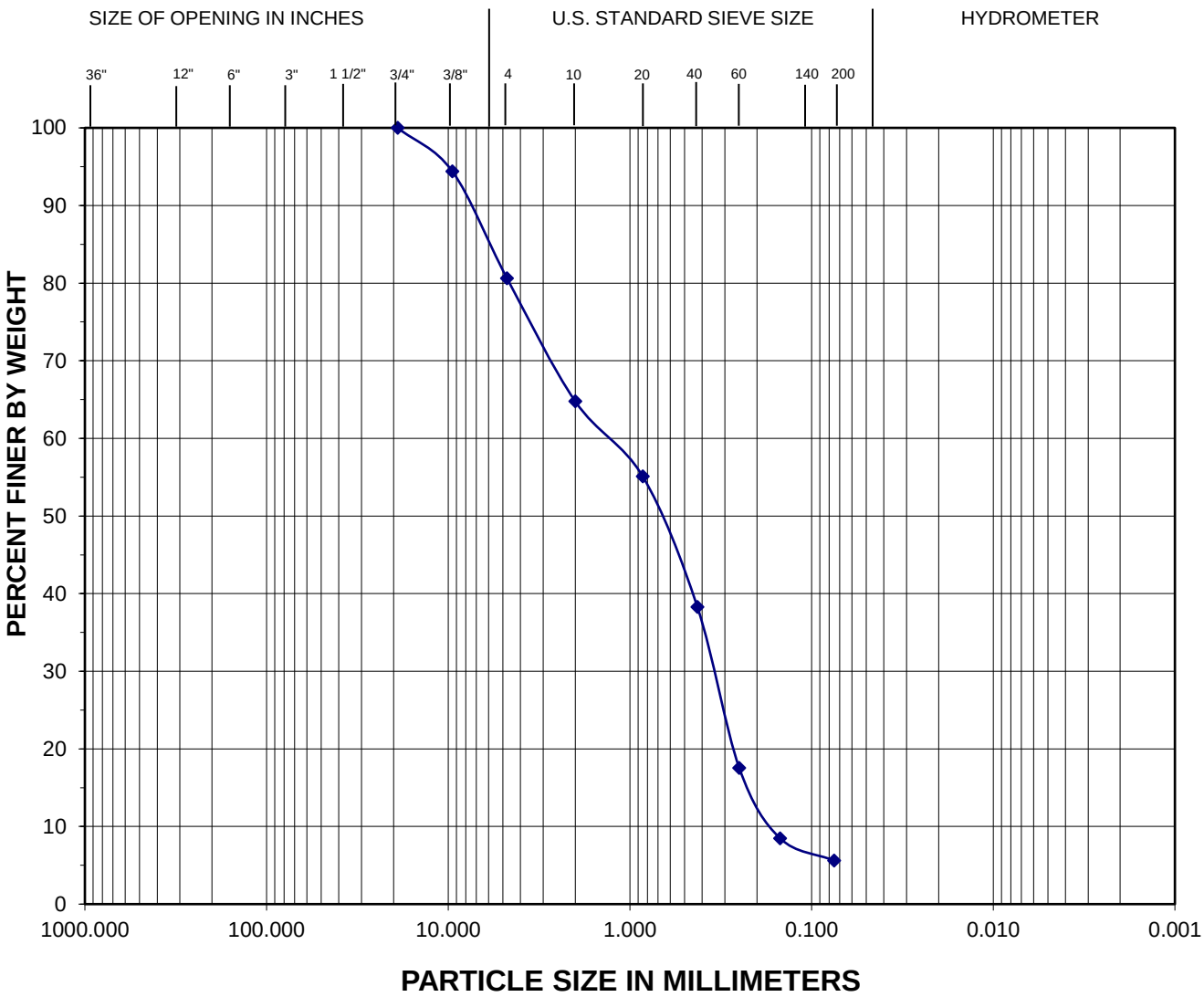

		Coarse	Fine	Coarse	Medium	Fine	Silt	Clay
BOULDERS	COBBLES	GRAVEL		SAND			FINE GRAINED	

Comments:

Exploration	Sample	Depth (feet)	Moisture (%)	Fines (%)	Description
B-3	S-3	5-6.5	13.6	5.6	SAND, with gravel, some silt

Zipper Geo Associates, LLC Geotechnical and Environmental Consultants	Project No.: 1945.01 DATE OF TESTING: 1/29/2018	PROJECT NAME: Talerman Residence

GRAIN SIZE ANALYSIS

Test Results Summary

ASTM D 422

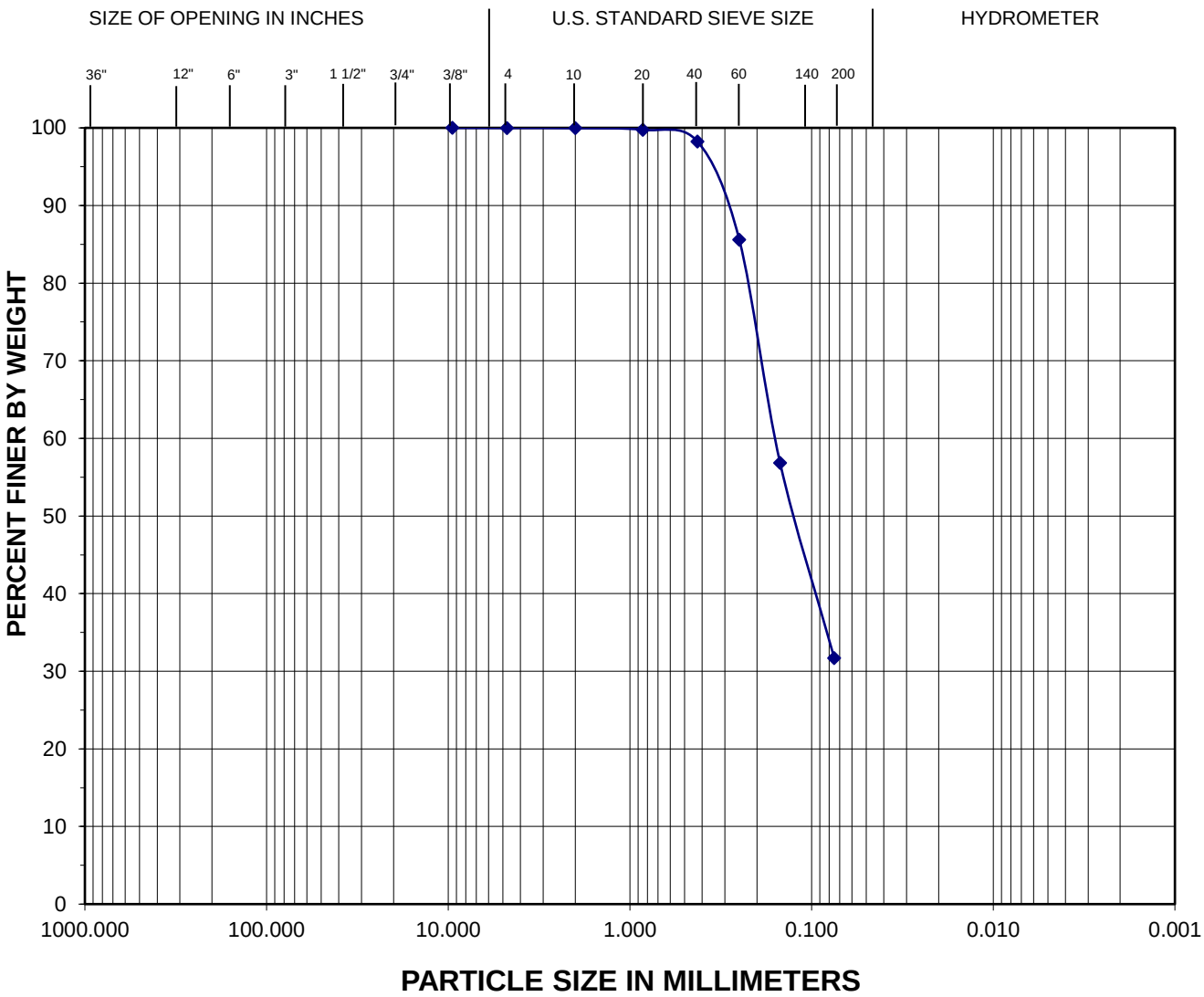

		Coarse	Fine	Coarse	Medium	Fine	Silt	Clay
BOULDERS	COBBLES	GRAVEL		SAND			FINE GRAINED	

Comments:

Exploration	Sample	Depth (feet)	Moisture (%)	Fines (%)	Description
B-3	S-8	20-21.5	19.4	31.7	Silty SAND

Zipper Geo Associates, LLC Geotechnical and Environmental Consultants	Project No.: 1945.01 DATE OF TESTING: 1/29/2018	PROJECT NAME: Talerman Residence