# Ecological No Net Loss Assessment Report

**Prepared for**

**Matthew Wiley**
**6838 96th Ave SE**
**Mercer Island, WA 98040**

**Prepared by**

Northwest Environmental Consulting, LLC

Northwest Environmental Consulting, LLC
600 North 36th Street, Suite 423
Seattle, WA 98103
206-234-2520

**February 2022**

## Purpose

The purpose of this report is to fulfill the requirements of City of Mercer Island Municipal Code (MICC) 19.07.110 Shoreline Master Program by assessing overall project impacts and proposed mitigation to determine if the project meets the "No Net Loss" General Regulation of the Shoreline Master Program.

No Net Loss is defined as "An ecological concept whereby conservation losses in one geographic or otherwise defined area are equaled by conservation gains in function in another area." Permits are being applied for a dock reconfiguration, platform lift addition, and bulkhead repair.

## Location

The subject property is located at 6838 96th Ave SE (King County parcel number 3024059010) in the City of Mercer Island, Washington (see Appendix A – Sheet A1.0). The parcel is on the waterfront of Lake Washington, a shoreline of the state, that contains several endangered fish species listed under the Endangered Species Act and Washington State designated priority fish species.

## Project Description

The work includes removal of the existing 314 square foot dock and reconstructing a new 595 square foot dock into deeper water. The reconfiguration will require removal of 3 8-inch piles, 4 10-inch piles, 1 12-inch pile and 1 14-inch pile. ThruFlow grated decking will be used for decking on the new dock. The existing boatlift will be moved into deeper water and a new platform roughly 10-feet by 12 feet platform lift will be installed. The new dock will require 18 8-inch epoxy coated steel piles be driven to support the new dock. The proposal also plans on removing 18 linear feet of rock bulkhead and replacing with a 95 square foot beach cove. (See Appendix A – Sheets A2.0 to A12.0).

During construction, a floating boom will surround the work barge and dock. A silt curtain will be used during bulkhead repair. (See Appendix A – Sheets A7.0)

A shoreline vegetation plan is proposed, that will add 2 native conifer trees and 3 native shrubs. These shoreline plantings will provide shade and allow beneficial allochthonous material to enter the lake along the shoreline (see Appendix A – Sheet A8.0).

Project drawings are included in Attachment A.

## Approach

Northwest Environmental Consulting LLC (NWEC) biologist Brad Thiele conducted a site visit on February 23, 2022 to evaluate conditions on site and adjacent to the site. NWEC also consulted the following sources for information on potential critical fish and wildlife habitat along this shoreline:

- Washington Department of Fish and Wildlife (WDFW): Priority Habitats and Species online database (http://apps.wdfw.wa.gov/phsontheweb/)

- WDFW SalmonScape online database of fish distribution and ESA listing units (https://apps.wdfw.wa.gov/salmonscape/)

- Mercer Island GIS online database (https://chgis1.mercergov.org/Html5Viewer/Index.html?viewer=PubMaps&viewer=PubMaps)

## Site Description

The subject property is a shoreline tract in a residential neighborhood. It has shoreline on its eastern boundary with single-family homes to the north and south along the shoreline.

The only existing structures on the property are the house, and the existing wood decked dock.

The shoreline is armored with a basalt bulkhead. The substrate of the lake is sand and gravel with some remnant Eurasian milfoil still present towards the end of the dock.

The shoreline is lawn with a decorative rock strip along the top of the bulkhead. Some ornamental woody vegetation is present along the property corner on the north side of the property. The neighboring properties are similar in shoreline armoring and have docks. See attached photos in Appendix B- Photos.

## Species Use

WDFW's PHS mapping and SalmonScape mapping tools show the following salmonid species using Lake Washington for migration and/or rearing: residential coastal cutthroat (*Oncorhynchus clarkii*), winter steelhead (*O. mykiss*), Dolly Varden/bull trout (*Salvelinus malma*), sockeye salmon (*O. nerka*), fall Chinook (*O. tshawytscha*), coho salmon (*O. kisutch*), and kokanee (*O. nerka*). The SalmonScape database maps the site as accessible to the Endangered Species Units (ESU) of Threatened Chinook and steelhead. Juveniles migrate and may rear in the waters near the project when traveling from spawning sites on other lake tributaries to the lake's outlet at the Hiram M. Chittenden Locks. The project site is accessible to any fish migrating or rearing in the lake. The shoreline is mapped as or very near a sockeye salmon spawning location.

Priority Habitats and Species mapping, maps a biodiversity area at Pioneer Park about 1,600 feet to the west but no other terrestrial priority species or habitats at or near the site.

The City of Mercer Island GIS Portal does not indicate any environmental features at the site.

## Project Impacts and Conservation Measurements

***Direct Impacts:***

**Sediments:** Sediment disturbance will occur below the OHWM and along the shoreline of Lake Washington during pile removal installation, and removal of a section of the bulkhead. Additionally, the tug and barge propwash may disturb sediments temporarily when making trips to/from the site.

Impacts to sediments should be minimal from installation of the pilings.

The reconstruction and removal of the bulkhead has the potential to create a significant sediment plume. A weighted silt curtain will be installed around the perimeter to contain any suspended sediments that occur during construction of the bulkhead.

**Shoreline:** Removing the bulkhead will improve shoreline conditions by removing a section of bulkhead that creates a reflecting wave at high water that can cause erosion of shoreline sediments. In addition the beach cove can be beneficial to outmigrating salmonids at high water.

Planting additional native vegetation, including a native cedar tree, will increase the habitat functions of the shoreline by creating shade along the shoreline that will be an improvement from the existing baseline habitat conditions at the project site. These plants will provide overhanging cover for fish, structural diversity for birds and wildlife, detritus for aquatic invertebrates and long-term recruitment of woody material and other allochthonous food sources. The proposed planting plan is included (see Appendix A - Sheet A8.0).

**Lakebed:** Removal of the existing piles (3 8-inch piles, 4 10-inch piles, 1 12-inch pile and 1 14-inch pile) and replacement with 18 8-inch piles will result in a restoration of 1.20 square feet of lake bottom.

**Noise:** Construction equipment will create noise audible to neighbors and in-water. Noise disturbance will be short-term and should have negligible effects on fish and wildlife in the area. Work will be completed during the in-water work window when juvenile fish are not expected to be present.

**Potential spills:** Short-term risks include the potential for petroleum spills that can occur with any equipment operation. The level of impact to the aquatic environment is expected to be minor because a trained crew will be onsite that will implement spill containment measures should a spill occur.

**Shading:** The proposed dock will increase overwater coverage by 266 square feet. The proposed decking will be ThruFlow grated decking. Grated decking allows more light to penetrate the waters below a dock, which can increase productivity in the water column, and reduce the full shade favored by salmonid predators. Salmonid predators are known to use hard shadowing under solid-decked docks to ambush juvenile salmonids. Reducing these hard shadows limits their ability to effectively hunt salmonids. In addition, hard shadowing may shown reduce juvenile salmonid outmigrations when encountered along the shoreline.

ThruFlow grated decking has measured performance at 43 percent light penetration (ThruFlow, 2021). Thus, the increase in lighting under the pier is effectively 57% of the area of a solid decked structure. Table 1 provides a summary of effective coverage:

**Table 1 – Effective coverage**

| | Existing/ Proposed | Proposed grated | Conversion | Effective coverage | Reduction in effective coverage |
|---|---|---|---|---|---|
| Remove Existing Dock (SF) | 314 | 0 | | 0 | 314 |
| New Grated Dock (SF) | 0 | 580 | 0.57 | 331 | 249 |

| | | | | | |
|---|---|---|---|---|---|
| New Grated Lift | 0 | 116 | 0.57 | 66 | 50 |
| Total (SF) | 314 | 696 | | 397 | |

The use of grated decking reduces effective overwater coverage at the site over using solid decking. The use of grated decking results in an increase of existing overwater coverage by 83 square feet over existing at the site. Without the use of grated decking overwater coverage at the site would increase by 383 square feet.

In addition the new dock configuration will move the moorage into water 7 to 8 feet deep from 2 to 3 feet deep. The first 30 feet of walkway will be reduced from about 6 feet to approximately 4 feet reducing the overwater coverage within 30 feet of shore by 62.5 square feet.

**Recreational Boating:** The project supports continued recreational boating, which has been identified as a limiting factor for salmonid populations in Lake Washington. The pier will not introduce additional boating to Lake Washington, as the owners could still access the lake from a public boat launch or private moorage facility.

***Other Conservation measures:***

**Work window:** The work will be completed during the prescribed in-water work window for this area of Lake Washington (July 16 to December 31). Operating within this time frame helps protect Chinook salmon, steelhead, bull trout and other salmonid fish species by doing work when juvenile fish are not expected to be present.

**Best Management Practices:** Applicable BMPs will be used, such as a floating boom around the in-water work area, to contain any floating debris that may escape during construction. The barge will have a perimeter containment sock to absorb oil and grease that might inadvertently wash from the barge during construction. A silt curtain will be used to contain turbidity that may be generated from removal of a section of existing bulkhead.

Hazardous material containment materials such as spill absorbent pads and trained personnel will be required onsite during any phase of construction where machinery is in operation near surface waters.

# Conclusion

Juvenile Chinook salmon, and other salmonids, rear and migrate along the Lake Washington shoreline.

There will be temporary impacts from noise and disturbed sediments during construction and bulkhead repair. Construction disturbance and the additional boat lift and dock reconfiguration will degrade ecological conditions at the site by increasing overwater coverage at the site. The effects of construction will be short term. The dock will use grated decking to minimize the effective overwater coverage to a net gain of 83 square feet. The grating reduces the hard shadows favored by salmonid predators and increases productivity under the pier.

Ecological conditions at the site will be improved by relocating the existing watercraft lift in the deepest water possible to prevent or reduce sediment disturbance during docking and castoff from propwash over the existing condition. In addition, the nearshore over water coverage will be reduced by about 63 square feet that will be an improvement over existing conditions by reducing the dock width in the nearshore. Juvenile salmonid are thought to prefer the nearshore (within 30 feet of shore) during outmigration. Docks may slow outmigration times

because of hard shadowing that cause juvenile salmonids to pause during migration. Reducing the hard shadowing and using grated decking may help increase salmonid migration times past the site.

The project will restore 1.2 square feet of lakebed from removal of existing pilings.

A shoreline planting plan will be implemented that will add native trees and shrubs to the shoreline that will provide natural shading, allochthonous food sources and will eventually be a source of woody materials that will improve shoreline conditions at the site in the long-term.

Creation of a new cove will remove 18 linear feet of existing hardened shoreline that can cause shoreline erosion from reflecting waves. In addition, the cove may be used by juvenile salmonids during high water in the Lake.

The project will minimize construction effects on the environment by following the prescribed fish window and using applicable BMPs to prevent construction spills, turbidity, and floating debris from escaping the area. The construction crew will retrieve all dropped items from the bottom and dispose of them properly.

This project has been designed to meet current residential dock standards and will use Best Management Practices to reduce project impacts. The conservation measures are designed to improve ecological functions or prevent further degradation of habitat **and will result in No Net Loss of ecological functions**. The addition of the shoreline planting plan, reduction of overwater coverage in the nearshore, and creation of a beach cove may improve ecological conditions at the site.

## Document Preparers

| | | | |
|---|---|---|---|
| Brad Thiele | Biologist | 28 years of experience | Northwest Environmental Consulting, LLC (NWEC) |

NWEC followed standard acceptable field methods and protocols at the time work was performed. These standards may include delineation of wetland and stream boundaries, characterization, rating, functional analyses, impact assessments and mitigation of impacts. The conclusions and findings in this report are based on field observations and measurements and represent our best professional judgment and to some extent rely on other professional service firms and available site information. Within the limitations of project scope, budget, and seasonal variations, we believe the information provided herein is accurate and true to the best of our knowledge. Northwest Environmental Consulting does not warrant any assumptions or conclusions not expressly made in this report or based on information or analyses other than what is included herein.

# References

King County. 2022. King County iMap. Online database. Accessed February 2022 at https://gismaps.kingcounty.gov/iMap/

Washington Department of Fish and Wildlife (WDFW). 2022. Priority Habitats and Species. Online database. Accessed February 2022 at http://apps.wdfw.wa.gov/phsontheweb/

WDFW. 2022. SalmonScape. Online database. Accessed April 2022 at http://apps.wdfw.wa.gov/salmonscape/

# Appendix A:
# Project Drawings

# SITE PLAN

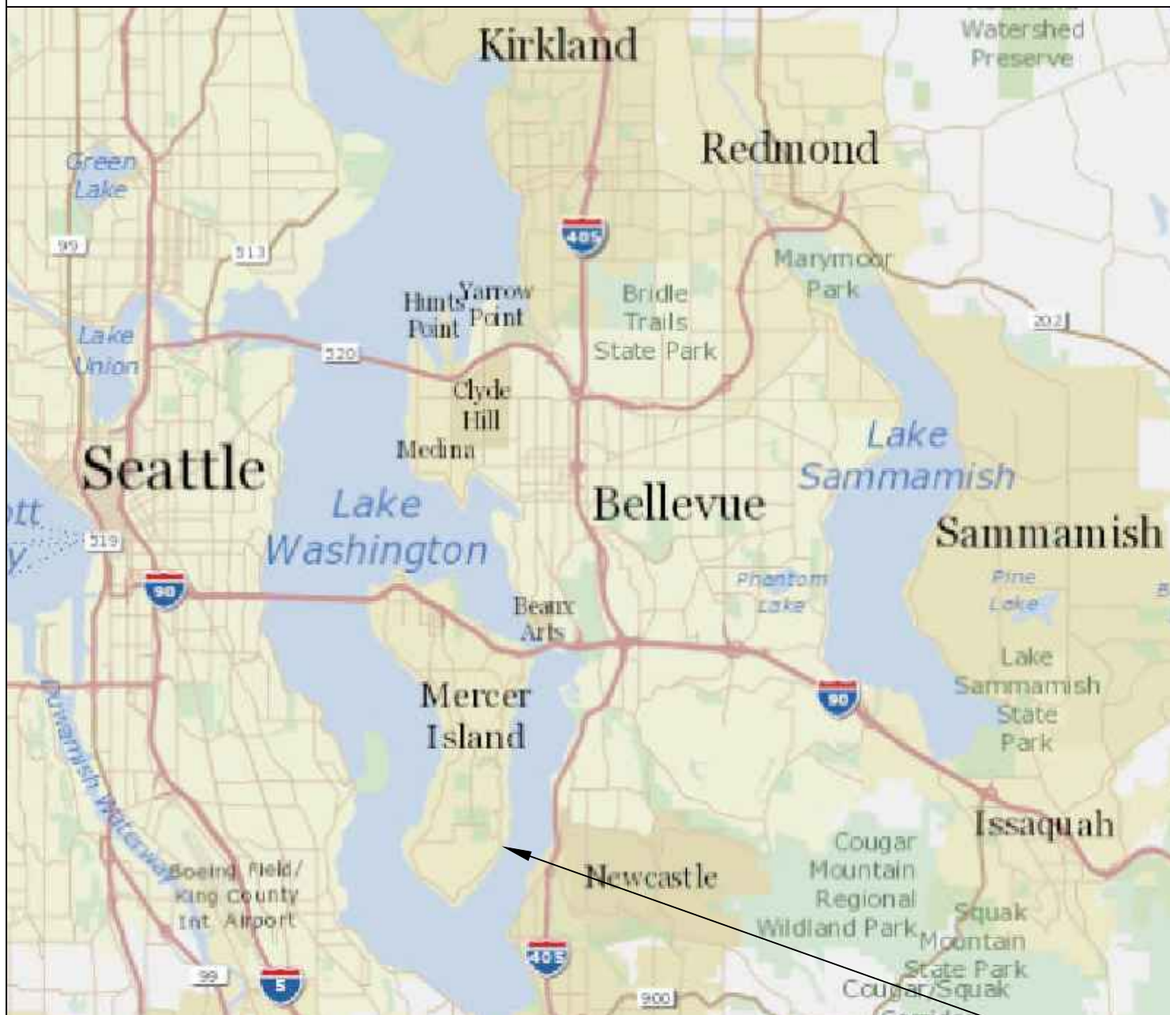


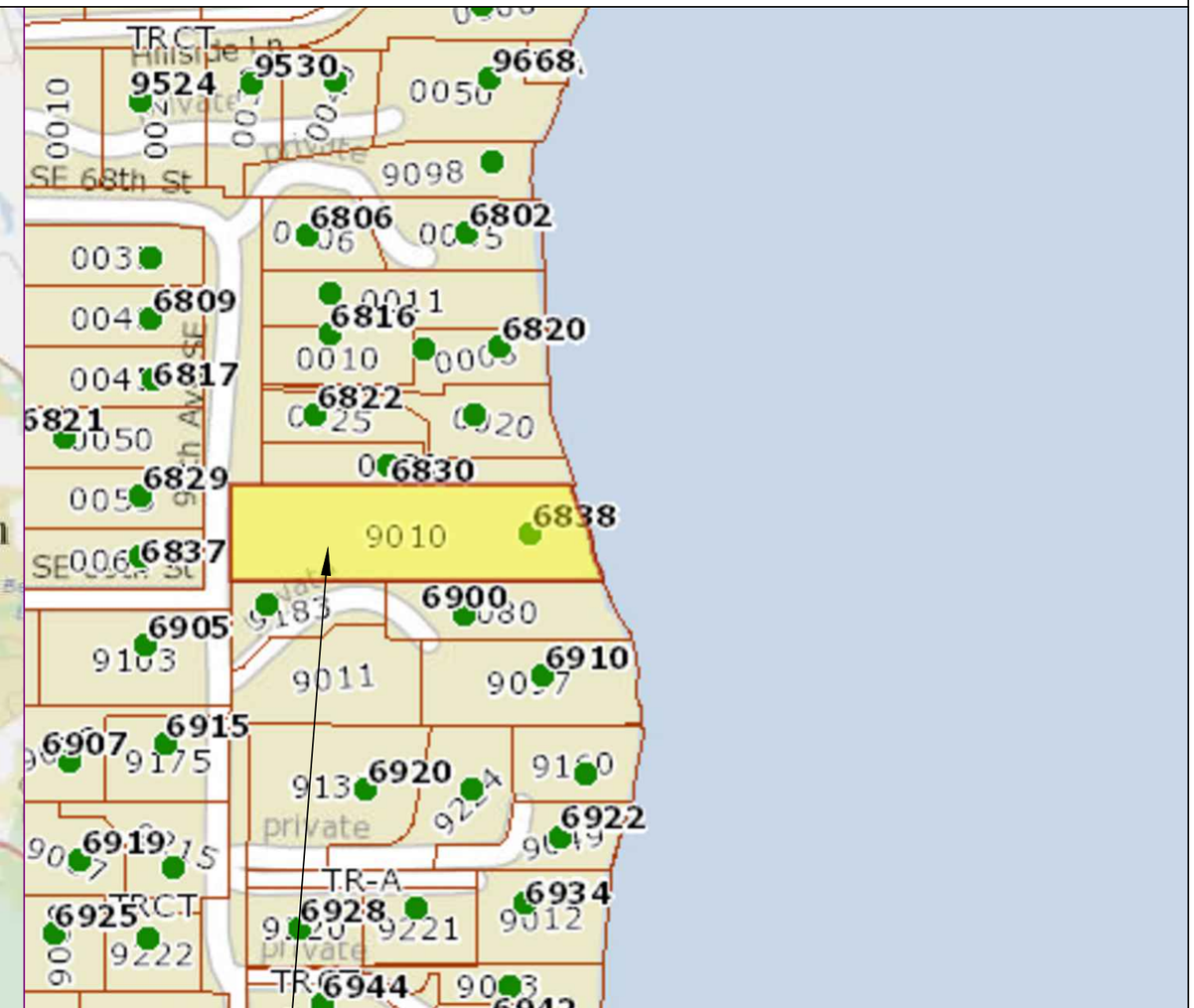


SUBJECT PROPERTY

Pin: 302405-9010

Legal Description: S 100 FT OF N 400 FT OF GL 2 & SHORE LAND ADJ

Plat Block:
Plat Lot:

LAT: 47.54112 LONG: -122.21022

County: King County
Location: Lake Washington

Applicant: Wiley Residence
6838 96th Ave SE
Mercer Island, WA 98040

Created: 11/04/21

Last Updated: 2/2/2022 12:04 PM Dray

Datum: CORPS OF ENGINEERS 1919
NE Quarter Of Section 30, Township 24, Range 05

Adjacent Owners:
RITZMAN GARY L+PATRICIA M
6900 96TH AVE SE 98040
SO JIMMY+XINMIN LUO
6830 96TH AVE SE 98040

BUILT BY SEABORN · ESTD 1947 ·

Seaborn Pile Driving
1080 W Ewing St
Seattle, WA 98119

Office: 206-236-1700 ext. 3
www.seabornpiledriving.com

Scope of Work: We propose to remove (10) piles, drive (18) 8" epoxy coated steel piles, add a platform lift, install a moorage cover with translucent roofing, remove the current dock, and build a new dock with grated decking material. We also propose to repair 18 lnft of bulkhead with a 94sqft cove.

SHEET A1.0

# EXISTING CONDITIONS

**CLEAN UP LAKE AROUND PROJECT**

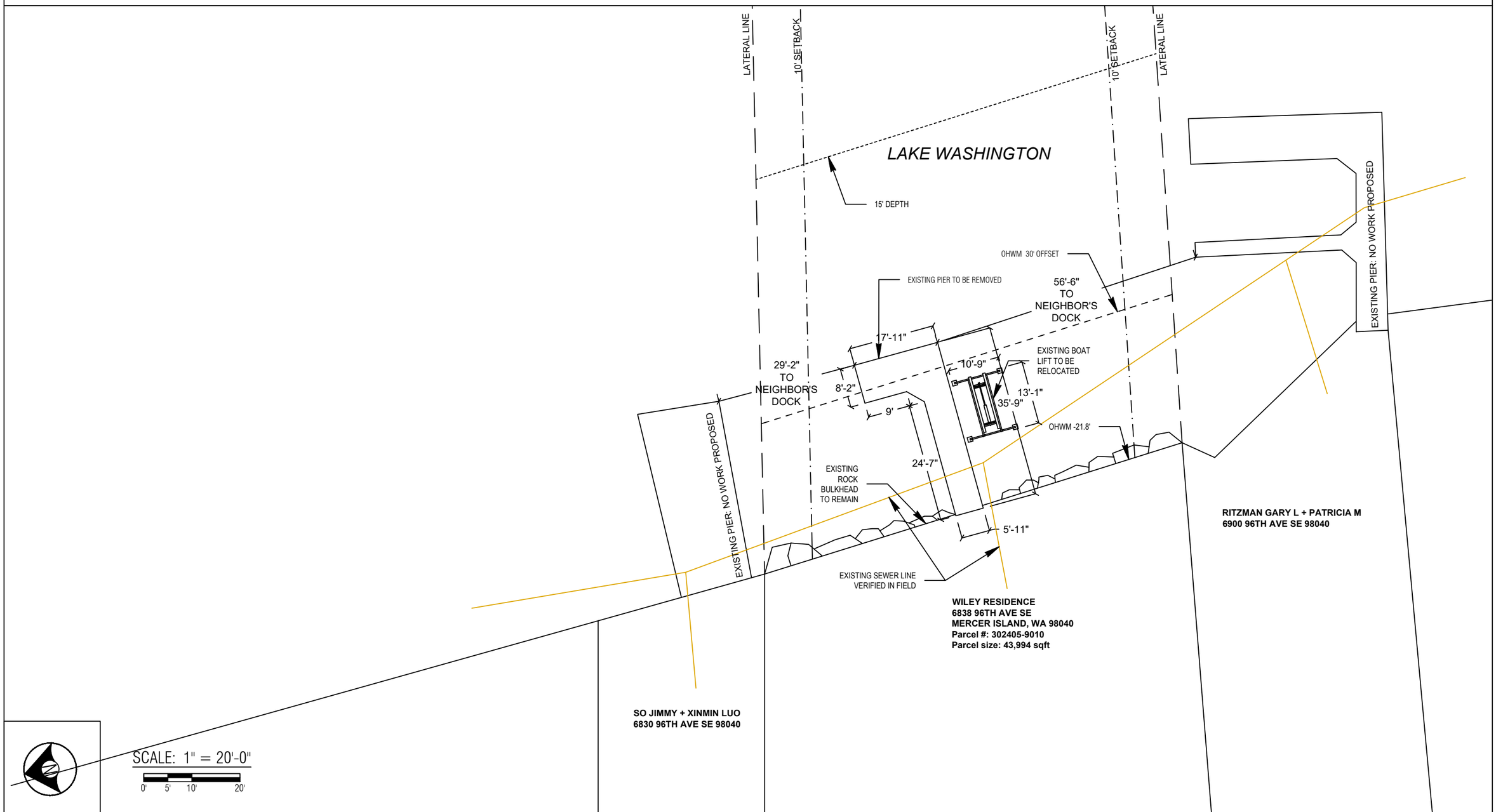



BUILT BY SEABORN · ESTD 1947 ·

Seaborn Pile Driving
1080 W Ewing St
Seattle, WA 98119

Office: 206-236-1700 ext. 3
www.seabornpiledriving.com


Scope of Work: We propose to remove (10) piles, drive (18) 8" epoxy coated steel piles, add a platform lift, install a moorage cover with translucent roofing, remove the current dock, and build a new dock with grated decking material. We also propose to repair 18 lnft of bulkhead with a 94sqft cove.

County: King County
Location: Lake Washington

Applicant: Wiley Residence
6838 96th Ave SE
Mercer Island, WA 98040

Created: 11/04/21

Last Updated: 2/2/2022 12:04 PM Dray

Datum: CORPS OF ENGINEERS 1919
NE Quarter Of Section 30, Township 24, Range 05

Adjacent Owners:
RITZMAN GARY L+PATRICIA M
6900 96TH AVE SE 98040
SO JIMMY+XINMIN LUO
6830 96TH AVE SE 98040

**SHEET A2.0**

# PROPOSED CONDITIONS

**CLEAN UP LAKE AROUND PROJECT**

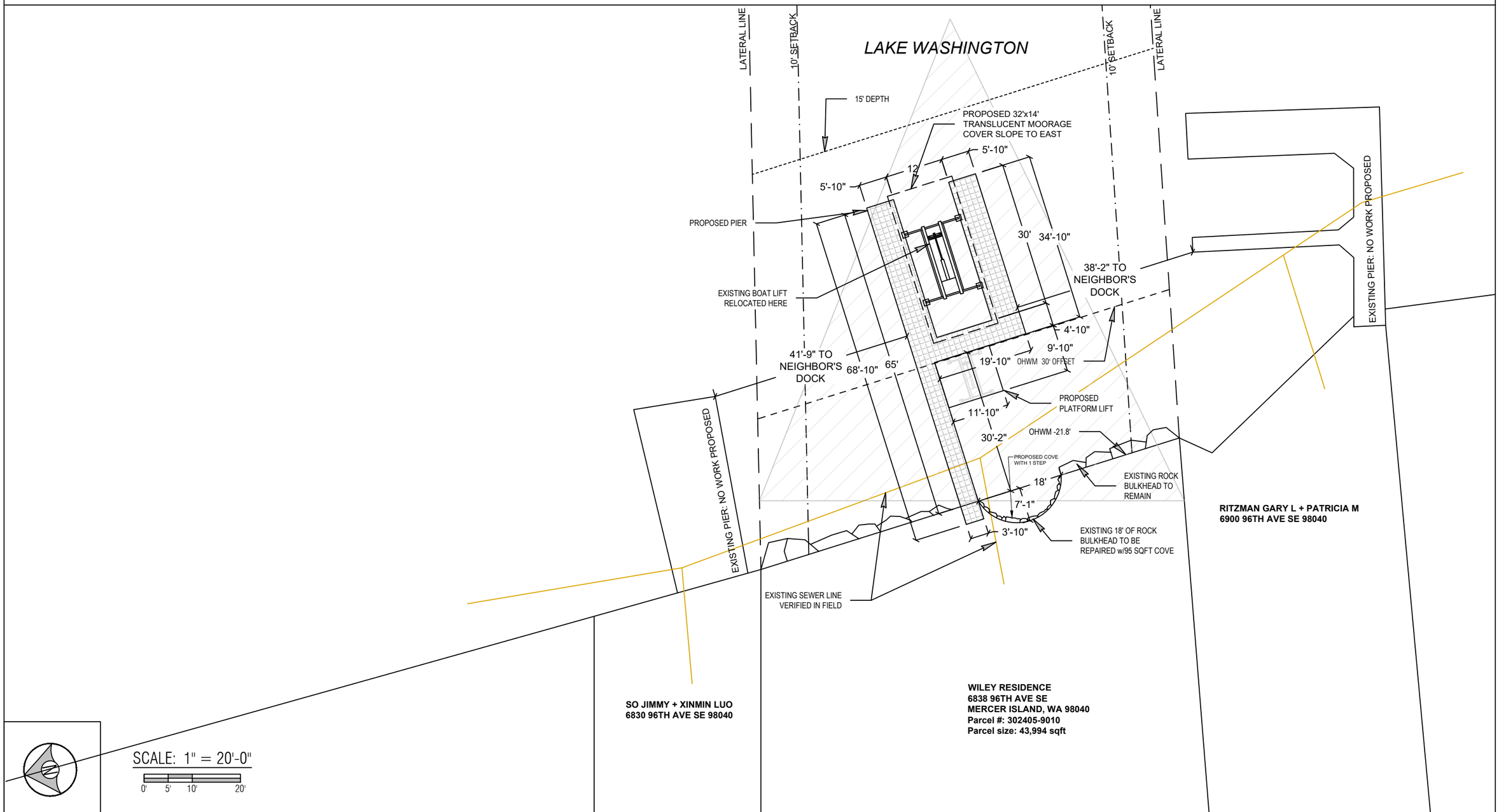


County: King County
Location: Lake Washington

Applicant: Wiley Residence
6838 96th Ave SE
Mercer Island, WA 98040

Created: 11/04/21

Last Updated: 2/2/2022 12:04 PM Dray

Datum: CORPS OF ENGINEERS 1919
NE Quarter Of Section 30, Township 24, Range 05

Adjacent Owners:
RITZMAN GARY L+PATRICIA M
6900 96TH AVE SE 98040
SO JIMMY+XINMIN LUO
6830 96TH AVE SE 98040

BUILT BY SEABORN · ESTD 1947 ·

Seaborn Pile Driving
1080 W Ewing St
Seattle, WA 98119

Office: 206-236-1700 ext. 3
www.seabornpiledriving.com

Scope of Work: We propose to remove (10) piles, drive (18) 8" epoxy coated steel piles, add a platform lift, install a moorage cover with translucent roofing, remove the current dock, and build a new dock with grated decking material. We also propose to repair 18 lnft of bulkhead with a 94sqft cove.

**SHEET A3.0**

# PIER DETAILS - EXISTING

## LEGEND

⊗ (10) EXISTING PILES - TO BE REMOVED

Area to be removed: 314sqft (total)

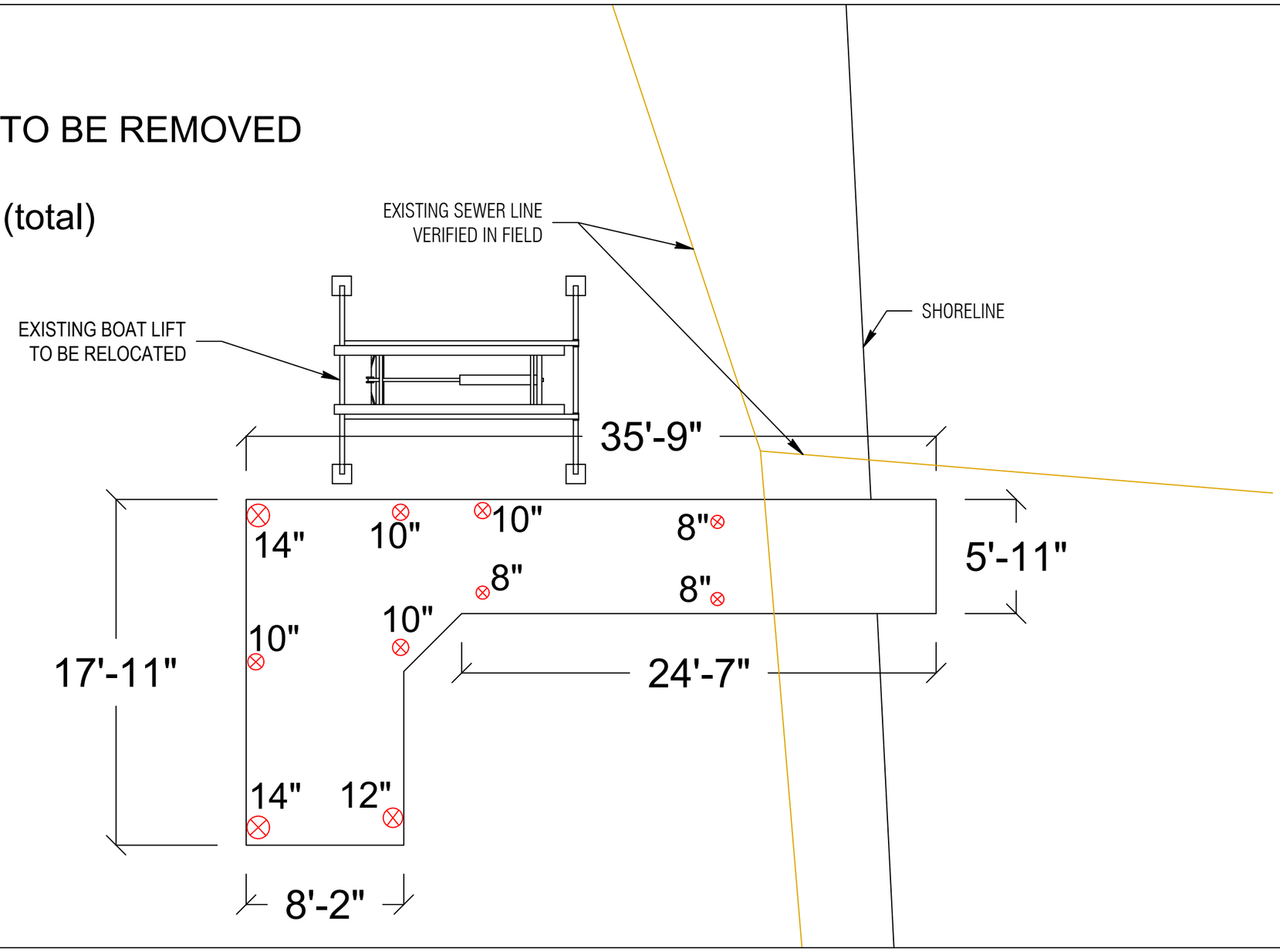


PLAN VIEW

Datum: CORPS OF ENGINEERS 1919
NE Quarter Of Section 30, Township 24, Range 05

Applicant: Wiley Residence
6838 96th Ave SE
Mercer Island, WA 98040

County: King County
Location: Lake Washington

Created: 11/04/21
Last Updated: 2/2/2022 12:04 PM Dray

Adjacent Owners:
RITZMAN GARY L+PATRICIA M
6900 96TH AVE SE 98040
SO JIMMY+XINMIN LUO
6830 96TH AVE SE 98040

BUILT BY SEABORN · ESTD 1947 ·


Seaborn Pile Driving
1080 W Ewing St
Seattle, WA 98119

Office: 206-236-1700 ext. 3
www.seabornpiledriving.com


Scope of Work: We propose to remove (10) piles, drive (18) 8" epoxy coated steel piles, add a platform lift, install a moorage cover with translucent roofing, remove the current dock, and build a new dock with grated decking material. We also propose to repair 18 lnft of bulkhead with a 94sqft cove.

SHEET A4.0

# PIER DETAILS - PROPOSED

LEGEND

● (18) PROPOSED STEEL PILES - TO BE ADDED

Area: 116 sqft (proposed platform lift)
Area: 580 sqft (over water total)
Area: 595 sqft (new grated decking total)

**Grated decking material is 43% light permeable

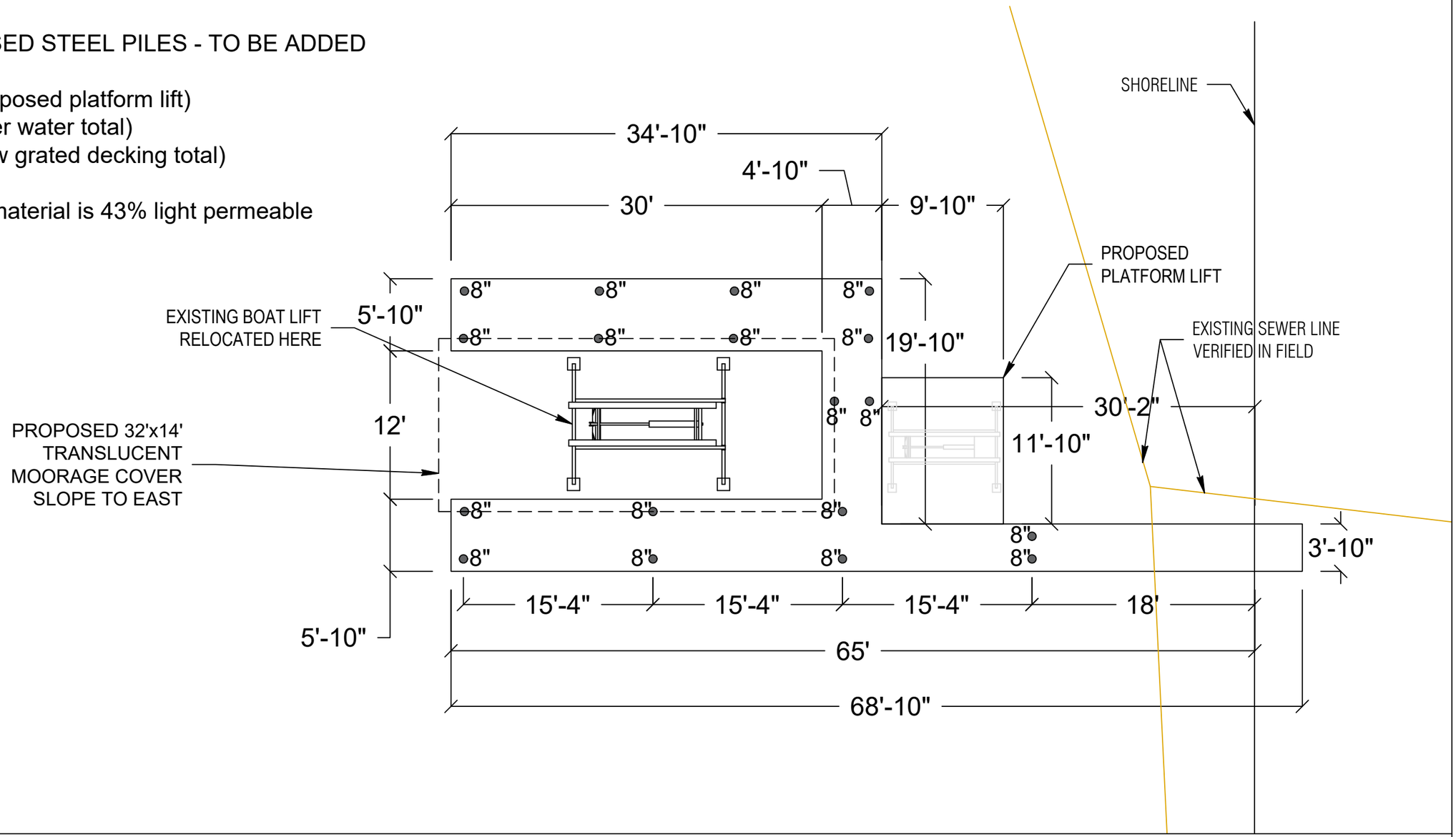


PLAN VIEW

County: King County
Location: Lake Washington

Applicant: Wiley Residence
6838 96th Ave SE
Mercer Island, WA 98040

Created: 11/04/21

Last Updated: 2/2/2022 12:04 PM Dray

Datum: CORPS OF ENGINEERS 1919
NE Quarter Of Section 30, Township 24, Range 05

Adjacent Owners:
RITZMAN GARY L+PATRICIA M
6900 96TH AVE SE 98040
SO JIMMY+XINMIN LUO
6830 96TH AVE SE 98040

BUILT BY SEABORN · ESTD 1947 ·


Seaborn Pile Driving
1080 W Ewing St
Seattle, WA 98119

Office: 206-236-1700 ext. 3
www.seabornpiledriving.com


Scope of Work: We propose to remove (10) piles, drive (18) 8" epoxy coated steel piles, add a platform lift, install a moorage cover with translucent roofing, remove the current dock, and build a new dock with grated decking material. We also propose to repair 18 lnft of bulkhead with a 94sqft cove.

SHEET
A5.0

# PIER DETAILS EXISTING/PROPOSED

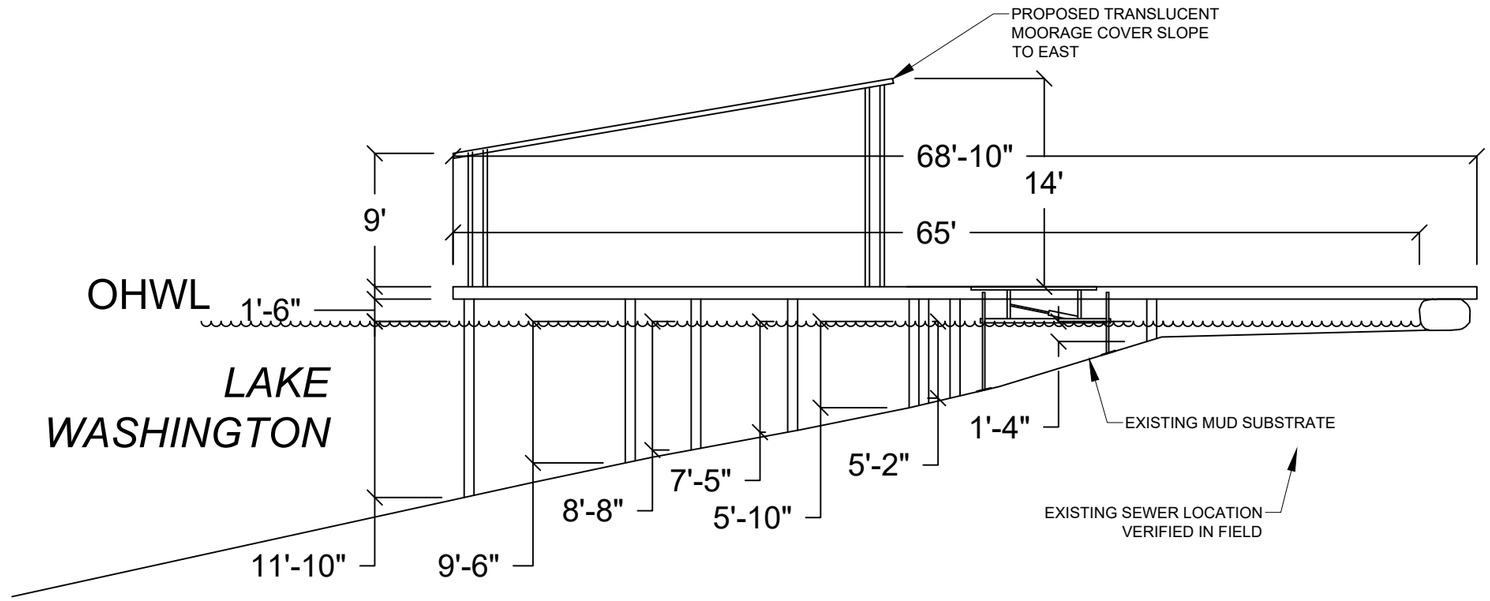


SECTION VIEW: A'-A'

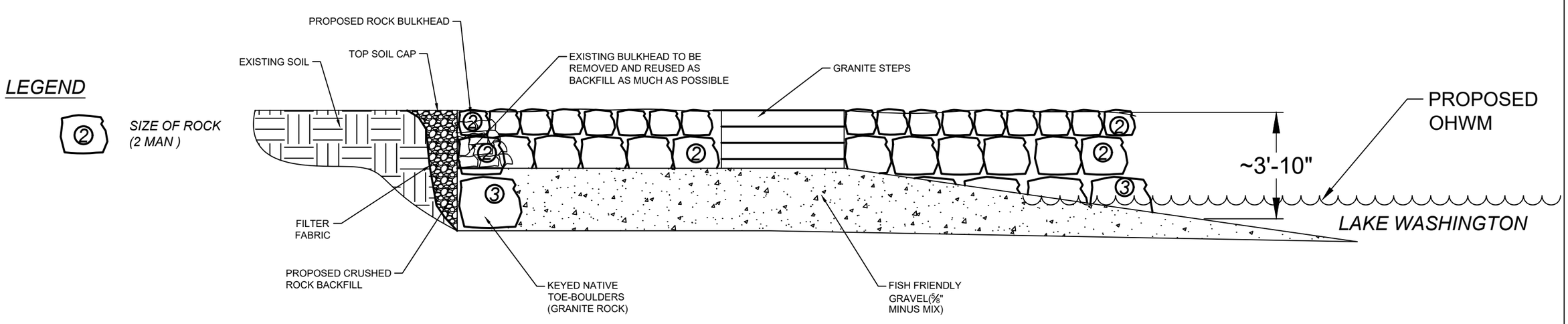


BULKHEAD


BUILT BY SEABORN · ESTD 1947 ·

Seaborn Pile Driving
1080 W Ewing St
Seattle, WA 98119

Office: 206-236-1700 ext. 3
www.seabornpiledriving.com


Scope of Work: We propose to remove (10) piles, drive (18) 8" epoxy coated steel piles, add a platform lift, install a moorage cover with translucent roofing, remove the current dock, and build a new dock with grated decking material. We also propose to repair 18 lnft of bulkhead with a 94sqft cove.

County: King County
Location: Lake Washington

Last Updated: 2/2/2022 12:04 PM Dray

Applicant: Wiley Residence
6838 96th Ave SE
Mercer Island, WA 98040

Created: 11/04/21

Datum: CORPS OF ENGINEERS 1919
NE Quarter Of Section 30, Township 24, Range 05

Adjacent Owners:
RITZMAN GARY L+PATRICIA M
6900 96TH AVE SE 98040
SO JIMMY+XINMIN LUO
6830 96TH AVE SE 98040

**SHEET A6.0**

# BMP INFORMATION

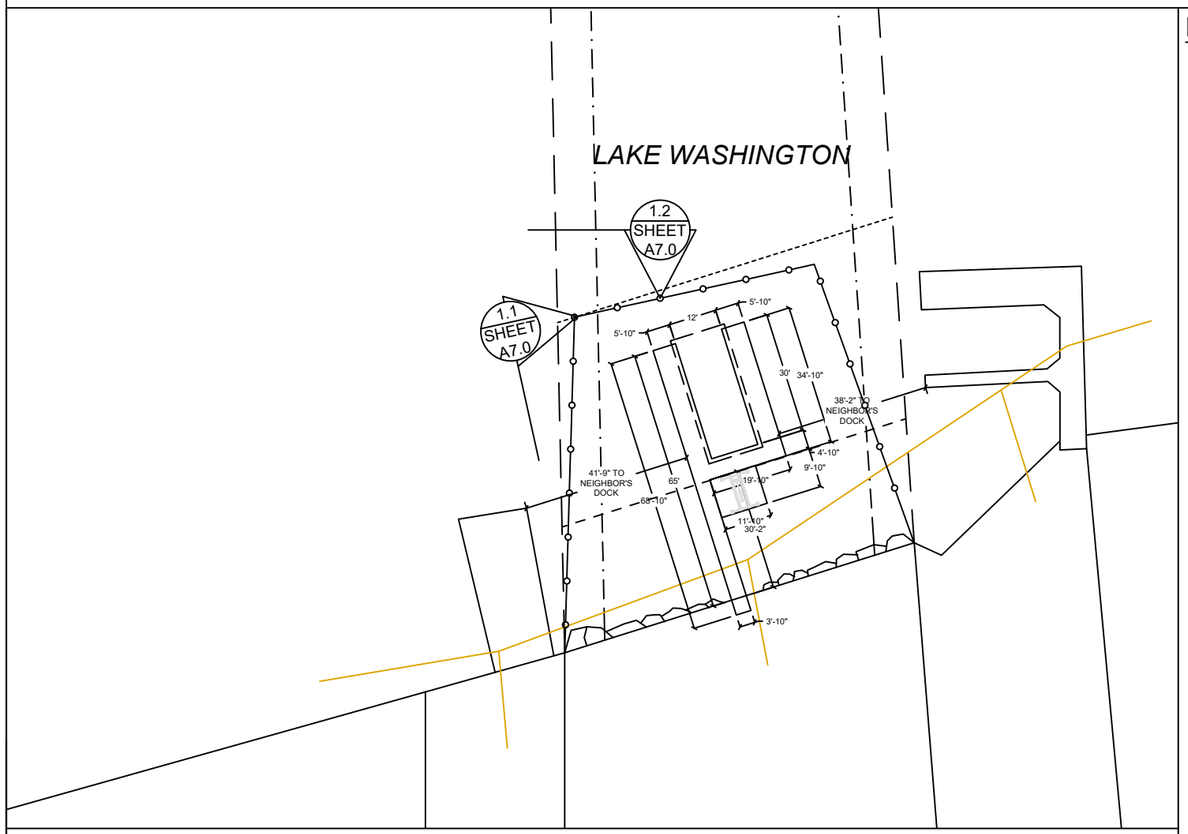


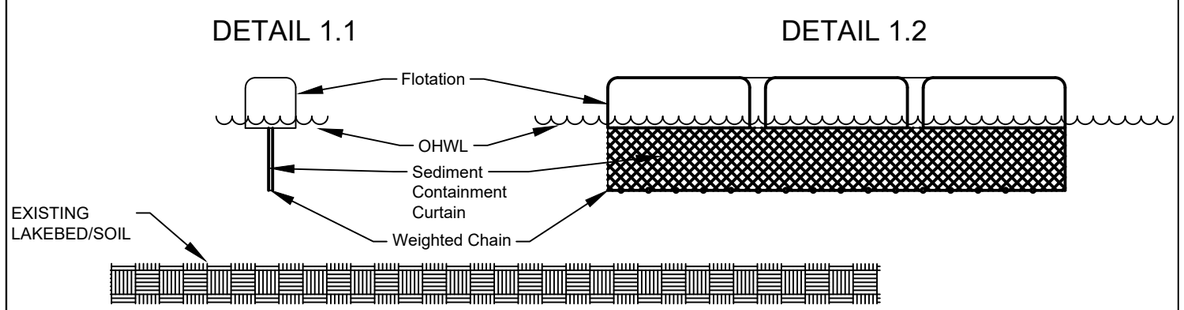


DETAIL 1.1 & 1.2

## BMP NOTES:

A. Constant vigilance shall be kept for the presence of protected fish species during all aspects of the proposed action, particularly during in-water activities such as vessel movement, deployment of anchors & spuds, pile driving, dredging, and placement of gravels and other fill.

1. The project manager shall designate an appropriate number of competent observers to survey the project site and adjacent areas for protected species, including the presence of fish as conditions allow.
2. Visual surveys shall be made prior to the start of work each day, and prior to resumption of work following any break of more than an hour. Periodic additional visual surveys throughout the work day are strongly recommended.
3. All in-water work shall be done during the in-water work window for the waterbody. Where there is a difference between the USCOE and WDFW work windows, the overlap of the two shall apply.
4. All pile driving and extraction shall be postponed or halted when obvious aggregations or schooling of fish are observed within 50 yards of that work, and shall only begin/resume after the animals have voluntarily departed the area.
5. When piloting vessels, vessel operators shall operate at speeds and power settings to avoid grounding vessels, and minimize substrate scour and mobilization of bottom sediments.

B. No contamination of the marine environment shall result from project-related activities.

1. Appropriate materials to contain and clean potential spills shall be stored and readily available at the work site and/or aboard project-related vessels.
2. The project manager and heavy equipment operators shall perform daily pre-work equipment inspections for cleanliness and leaks. All heavy equipment operations shall be postponed or halted should a leak be detected, and shall not proceed until the leak is repaired and the equipment is cleaned.
3. To the greatest extent practicable, utilize biodegradable oils for equipment that would be operated in or near water.
4. Fueling of land-based vehicles and equipment shall take place at least 50 feet away from the water, preferably over an impervious surface. Fueling of vessels shall be done at approved fueling facilities.
5. Turbidity and siltation from project-related work shall be minimized and contained through the appropriate use of erosion control practices, effective silt containment devices, and the curtailment of work during adverse weather and tidal/flow conditions.
6. All wastes shall be collected and contained for proper disposal at approved upland disposal sites appropriate for the material(s).
7. When removing piles and other similarly treated wood, containment booms must fully enclose the work area. Wood debris, oils, and any other materials released into lake waters must be collected, removed, and properly disposed of at approved disposal sites.
8. All in- and over-water wood cutting would be limited to the minimum required to remove the subject wood component, and all cutting work should be enclosed within floating containment booms.
9. When removing piles, no actions shall be taken that would cause adhering sediments to return to lake waters.
10. Above-water containment shall be installed around removed piles to prevent sediment laden waters from returning to lake waters.
11. Construction staging (including stocking of materials, etc.) will occur on the supply barge.
12. All Exposed wood to be used on the project will be treated with a cheminite treatment.

County: King County
Location: Lake Washington

Applicant: Wiley Residence
6838 96th Ave SE
Mercer Island, WA 98040

Created: 11/04/21

Last Updated: 2/2/2022 12:04 PM Dray

Datum: CORPS OF ENGINEERS 1919
NE Quarter Of Section 30, Township 24, Range 05

Adjacent Owners:
RITZMAN GARY L+PATRICIA M
6900 96TH AVE SE 98040
SO JIMMY+XINMIN LUO
6830 96TH AVE SE 98040

BUILT BY SEABORN · ESTD 1947 ·

Seaborn Pile Driving
1080 W Ewing St
Seattle, WA 98119

Office: 206-236-1700 ext. 3
www.seabornpiledriving.com

Scope of Work: We propose to remove (10) piles, drive (18) 8" epoxy coated steel piles, add a platform lift, install a moorage cover with translucent roofing, remove the current dock, and build a new dock with grated decking material. We also propose to repair 18 lnft of bulkhead with a 94sqft cove.

SHEET
A7.0

# MITIGATION PLAN

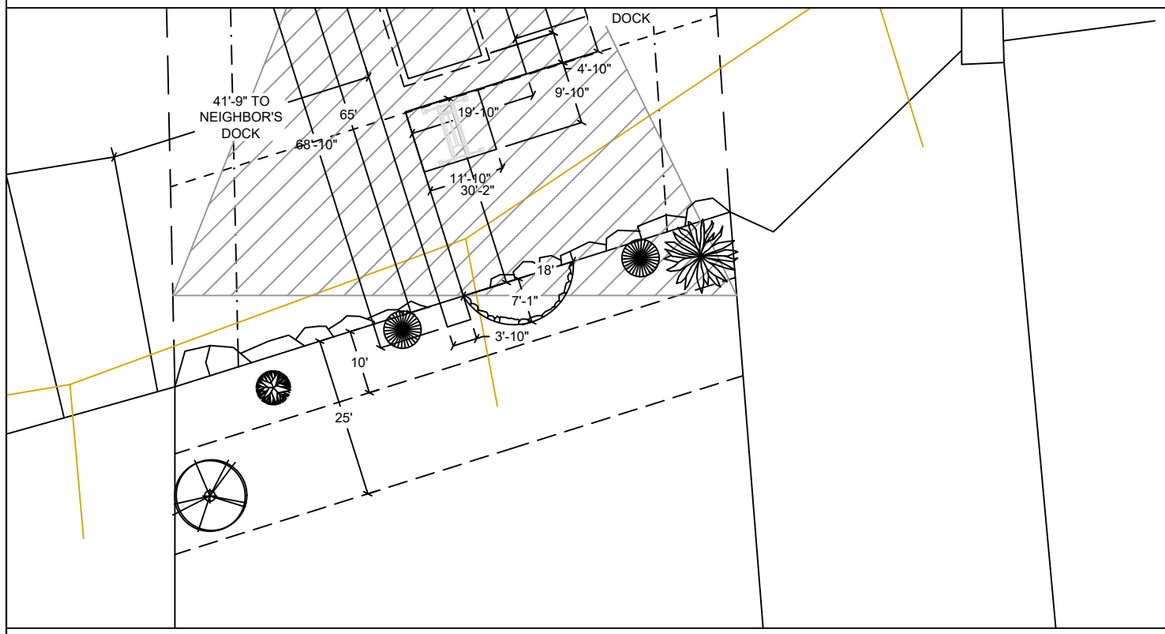


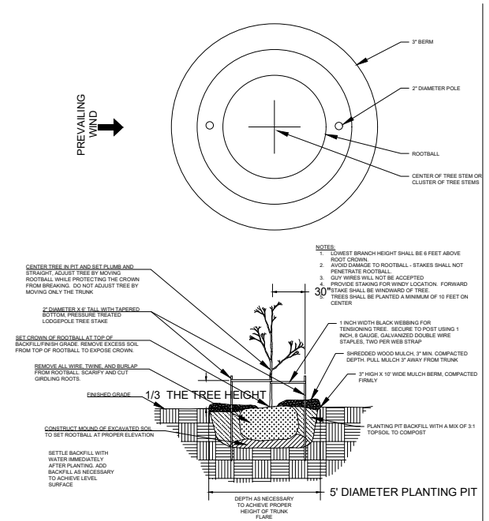


**TREE PLANTING DETAILS (NTS)**

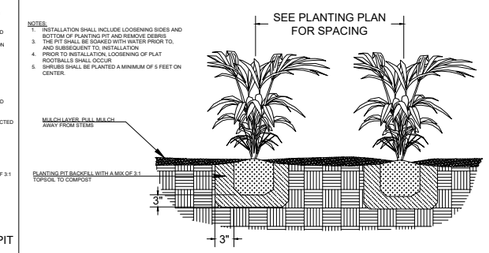


**SHRUB AND GROUNDCOVER PLANTING DETAILS (NTS)**

## Notes:

1. Shrubs are show, and shall be planted, at least five feet on center. Trees are show, and shall be planted, at least ten feet to center.
2. The property owner will implement and abide by the shoreline planting plan. The plants shall be installed before or concurrent with the work authorized by this permit. A report, as-built drawing and photographs demonstrating the plants have been installed or a report on the status of project construction will be submitted to the U.S. Army Corps of Engineers, Seattle District, Regulatory Branch, within 12 months from the date of permit issuance. This reporting requirement may be met by completing and submitting a U.S. Army Corps of Engineers approved Report for Mitigation Work Completion form.
3. The property owner will maintain and monitor the survival of installed shoreline plantings for five years after the U.S. Army Corps of Engineers accepts the as-built report. Installed plants shall achieve 100% survival during monitoring Years 1 and 2. Installed plants shall achieve at least 80% survival during monitoring Years 3, 4 and 5. Percent survival is based on the total number of plants installed in accordance with the approved riparian planting plan. Individual plants that die will be replaced with native riparian species in order to meet the survival performance standards.
4. The property owner will provide annual monitoring reports for five years (Monitoring Years 1-5). Each annual monitoring report will include written and photographic documentation on plant mortality and replanting efforts and will document whether the performance standards are being met. Photos will be taken from established points and used repeatedly for each monitoring year. In addition to photos at designated points, photo documentation will include a panoramic view of the entire planting area. Submitted photos will be formatted on standard 8 1/2 x 11" paper, dated with the date the photo was taken, and clearly labeled with the direction from which the photo was taken. The photo location points will be identified on an appropriate drawing. Annual shoreline planting monitoring reports will be submitted to the U.S. Army Corps of Engineers, Seattle District, Regulatory Branch, by November 31 of each monitoring year. This reporting requirement may be met by completing and submitting a U.S. Army Corps of Engineers approved Mitigation Planting Monitoring Report form.

## PROPOSED PLANTING SPECIES/QUANTITIES

| SYMBOL | LATIN NAME | COMMON NAME | QTY | SIZE |
|---|---|---|---|---|
| | Thuja picatta | Western Redcedar | 1 | 3 ft |
| | Pinus contorta v contorta | Shore pine | 1 | 3 ft |
| | Rosa nutkana | Nootka Rose | 1 | 1 Gallon |
| | Philadelphus lewisii | Mock Orange | 2 | 1 Gallon |

PLANTS: Shrubs to be installed 5ft on center and trees to be installed 10ft on center.

BUILT BY SEABORN · ESTD 1947 ·


Seaborn Pile Driving
1080 W Ewing St
Seattle, WA 98119

Office: 206-236-1700 ext. 3
www.seabornpiledriving.com


Scope of Work: We propose to remove (10) piles, drive (18) 8" epoxy coated steel piles, add a platform lift, install a moorage cover with translucent roofing, remove the current dock, and build a new dock with grated decking material. We also propose to repair 18 lnft of bulkhead with a 94sqft cove.

County: King County
Location: Lake Washington

Applicant: Wiley Residence
6838 96th Ave SE
Mercer Island, WA 98040

Created: 11/04/21

Last Updated: 2/2/2022 12:04 PM Dray

Datum: CORPS OF ENGINEERS 1919
NE Quarter Of Section 30, Township 24, Range 05

Adjacent Owners:
RITZMAN GARY L+PATRICIA M
6900 96TH AVE SE 98040
SO JIMMY+XINMIN LUO
6830 96TH AVE SE 98040

SHEET A8.0

# EXISTING PLANT PLAN

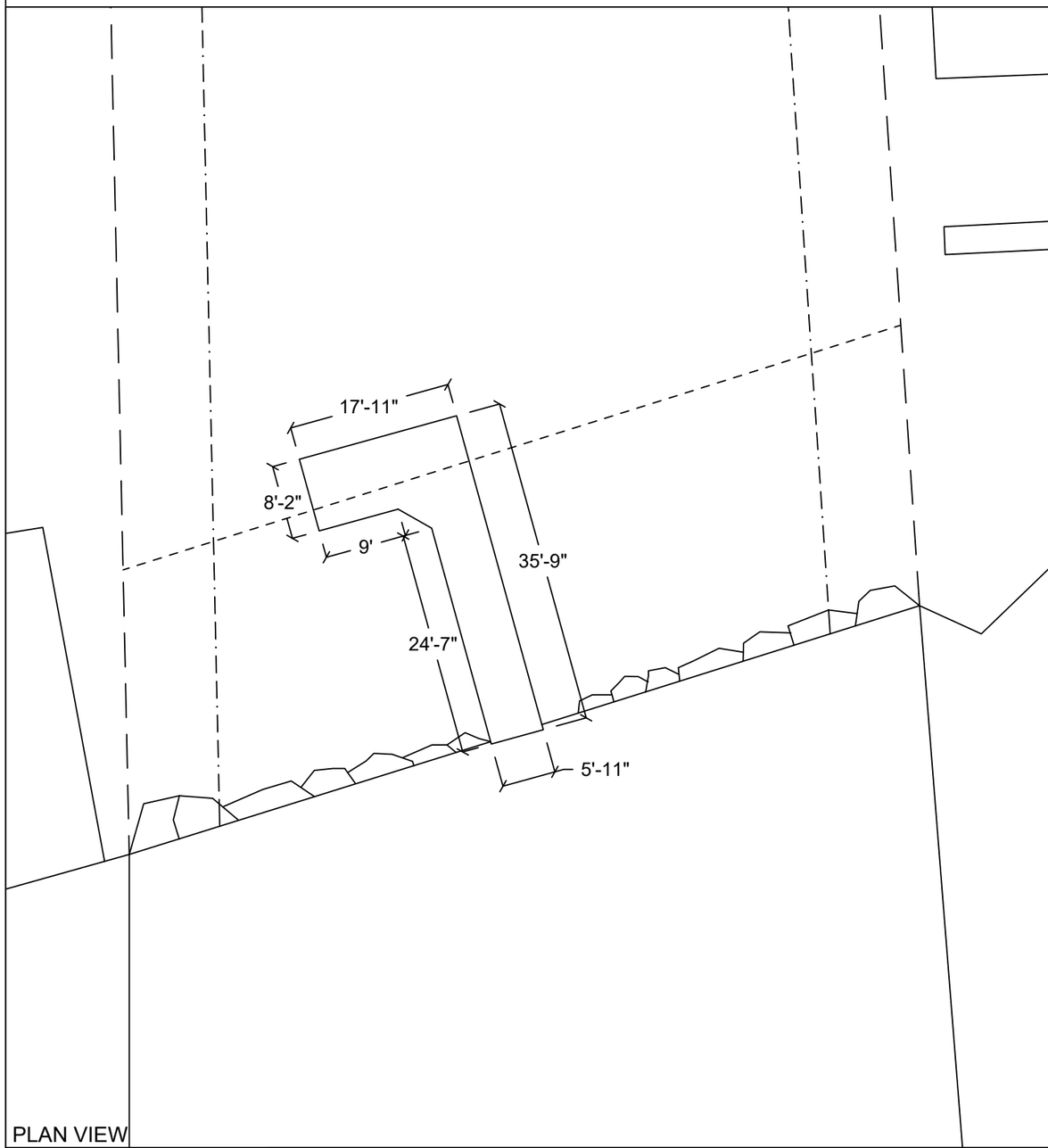


PLAN VIEW

NO EXISTING PLANTS

EXISTING PLANTS TABLE

County: King County
Location: Lake Washington

Applicant: Wiley Residence
6838 96th Ave SE
Mercer Island, WA 98040

Created: 11/04/21

Last Updated: 2/2/2022 12:04 PM Dray

Datum: CORPS OF ENGINEERS 1919
NE Quarter Of Section 30, Township 24, Range 05

Adjacent Owners:
RITZMAN GARY L+PATRICIA M
6900 96TH AVE SE 98040
SO JIMMY+XINMIN LUO
6830 96TH AVE SE 98040

BUILT BY SEABORN · ESTD 1947 ·

Seaborn Pile Driving
1080 W Ewing St
Seattle, WA 98119

Office: 206-236-1700 ext. 3
www.seabornpiledriving.com

Scope of Work: We propose to remove (10) piles, drive (18) 8" epoxy coated steel piles, add a platform lift, install a moorage cover with translucent roofing, remove the current dock, and build a new dock with grated decking material. We also propose to repair 18 lnft of bulkhead with a 94sqft cove.

SHEET
A9.0

# GENERAL NOTES:

MATERIALS SPEC LIST:

**Boat Lifts:**
* SL10014ARW - 146" x 191"
* Platform Lift - 11'-10"x9'-10"

**Decking Material:** FRPP - Fiberglass reinforced polypropylene
Light permeable percentage:
* Surface - 43%
* 18" Dock Height - 61%

**SEWER:**
* All sewer is field verified by probing the lake bed manually during the allowed work windows for the area.

**PILES:**
* All new piles are epoxy coated steel piles *size varies, see plan set
* Piles are driven using the vibro method

MITIGATION:
* Originally submitted mitigation will change following CORPS submittal. We will update the plan set to reflect all changes before submitting for an amendment

CODE REFERENCES: Mercer Island

**We are applying for the permit to be reviewed under the:**
"Alternative Development Standards" per MIMC 19.13050(F)(3).
The code official shall approve moorage facilities not in compliance with the development standards in subsection (F)(1) or (F)(2) of this section subject to both U.S. Army Corps of Engineers and Washington Department of Fish and Wildlife approval to an alternate project design. The following requirements and all other applicable provisions in this chapter shall be met:
i. The dock must be no larger than authorized through state and federal approval; Ch. 19.13 Shoreline Master Program | Mercer Island City Code Page 30 of 34 The Mercer Island City Code is current through Ordinance 20C-13, passed June 16, 2020.

**The dock fits within the parameters listed.**
ii. The maximum width must comply with the width of moorage facilities standards specified in standards specified in subsection D of this section (Table D);

**The maximum width is compliant.**
iii. The minimum water depth must be no shallower than authorized through state and federal approval;

**The minimum water depth is compliant.**
iv. The applicant must demonstrate to the code official's satisfaction that the proposed project will not create a net loss in ecological function of the shorelands; and

**A no net loss report is attached.**
v. The applicant must provide the city with documentation of approval of the moorage facilities by both the U.S. Army Corps of Engineers and the Washington Department of Fish and Wildlife.

**The plan set is under review by both CORPS and WDFW.**

Last permit issued for property: BLDG Permit#0104-170 on 04/19/01
Dock established/constructed: 1990

County: King County
Location: Lake Washington

Applicant: Wiley Residence
6838 96th Ave SE
Mercer Island, WA 98040

Created: 11/04/21
Last Updated: 2/2/2022 12:04 PM Dray

Datum: CORPS OF ENGINEERS 1919
NE Quarter Of Section 30, Township 24, Range 05

Adjacent Owners:
RITZMAN GARY L+PATRICIA M
6900 96TH AVE SE 98040
SO JIMMY+XINMIN LUO
6830 96TH AVE SE 98040

BUILT BY SEABORN · ESTD 1947 ·
Seaborn Pile Driving
1080 W Ewing St
Seattle, WA 98119
Office: 206-236-1700 ext. 3
www.seabornpiledriving.com

Scope of Work: We propose to remove (10) piles, drive (18) 8" epoxy coated steel piles, add a platform lift, install a moorage cover with translucent roofing, remove the current dock, and build a new dock with grated decking material. We also propose to repair 18 lnft of bulkhead with a 94sqft cove.

SHEET A10.0

# DETAILS - TRACK

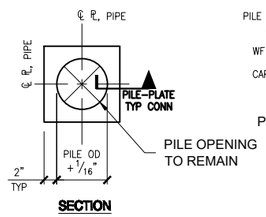


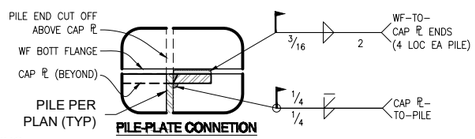


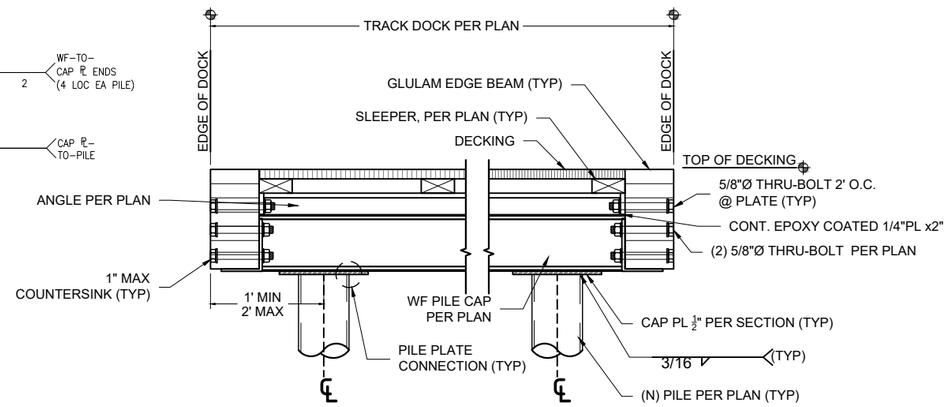


S1 DOCK SECTION w/PILES - TYP
SCALE: 1" - 1'

S3 DETAIL NOT IN USE

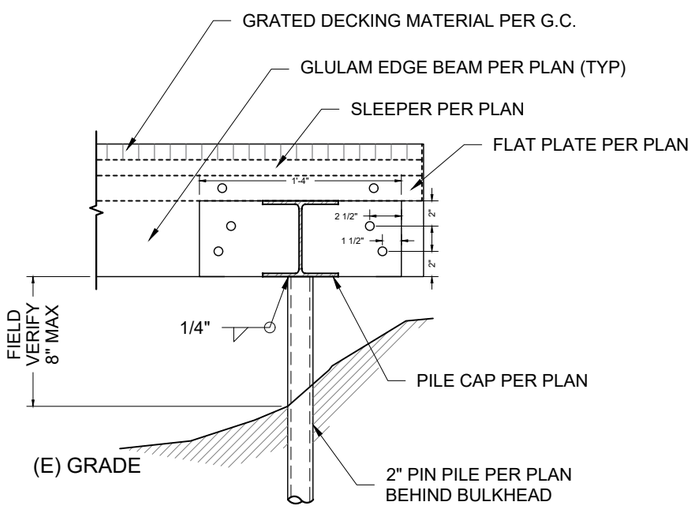


S4 PIN PILE @SHORE MOUNT - TYP
SCALE: 1" - 1'

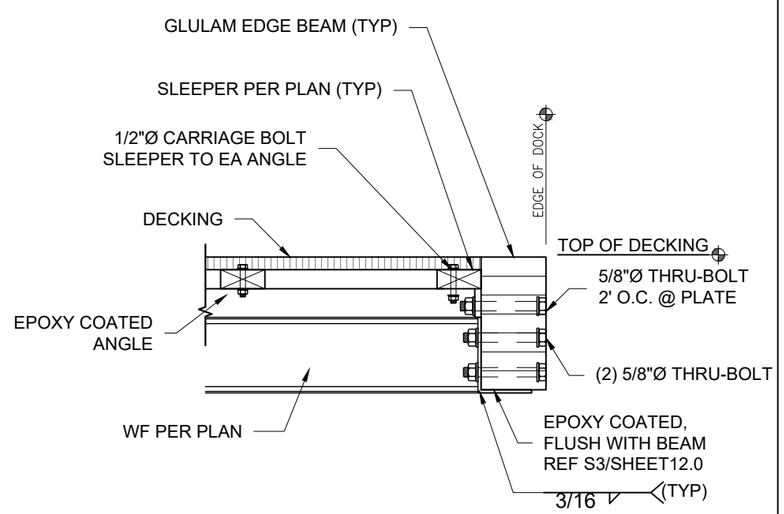


S5 EDGE SECTION (STEEL TRACK) - TYP
SCALE: 1" - 1'

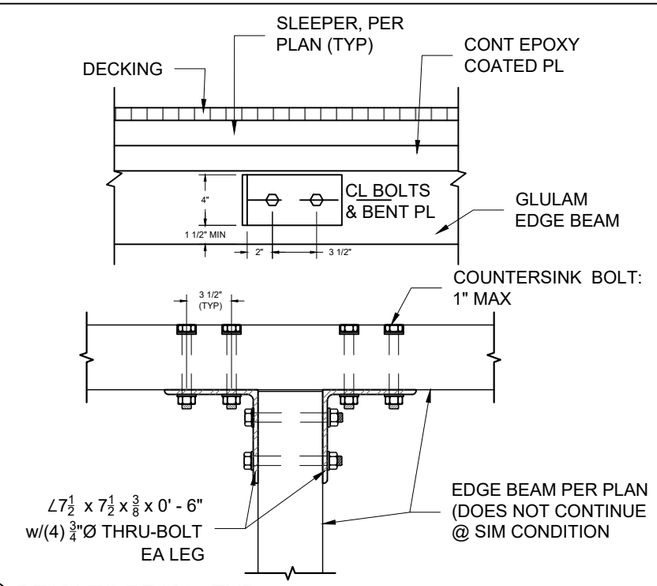


S6 BEAM TO BEAM - TYP
SCALE: 1" - 1'

County: King County
Location: Lake Washington

Applicant: Wiley Residence
6838 96th Ave SE
Mercer Island, WA 98040

Created: 11/04/21
Last Updated: 2/2/2022 12:04 PM Dray

Datum: CORPS OF ENGINEERS 1919
NE Quarter Of Section 30, Township 24, Range 05

Adjacent Owners:
RITZMAN GARY L+PATRICIA M
6900 96TH AVE SE 98040
SO JIMMY+XINMIN LUO
6830 96TH AVE SE 98040

BUILT BY SEABORN · ESTD 1947 ·

Seaborn Pile Driving
1080 W Ewing St
Seattle, WA 98119

Office: 206-236-1700 ext. 3
www.seabornpiledriving.com

Scope of Work: We propose to remove (10) piles, drive (18) 8" epoxy coated steel piles, add a platform lift, install a moorage cover with translucent roofing, remove the current dock, and build a new dock with grated decking material. We also propose to repair 18 lnft of bulkhead with a 94sqft cove.

SHEET 11.0

# DETAILS - TRACK

S1 DETAIL NOT IN USE

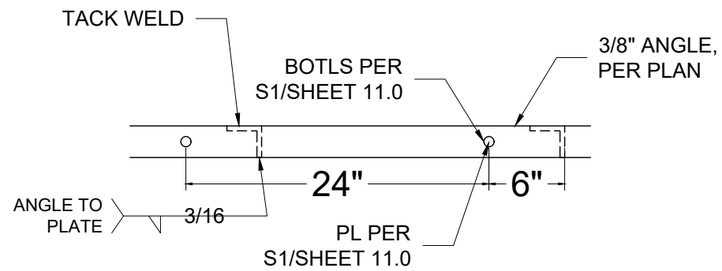


S2 ANGLE TO PLATE - TYP
SCALE: 1" - 1'

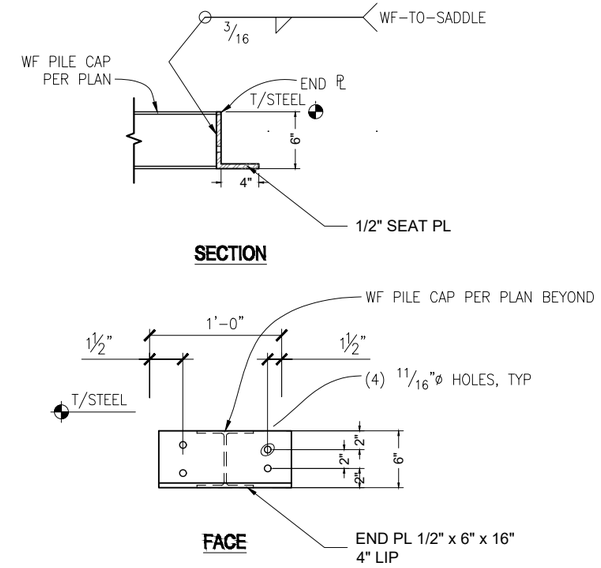


S3 BEAM SADDLE BRACKET
SCALE: 3/4" - 1'

S4 DETAIL NOT IN USE

S5 DETAIL NOT IN USE

S6 DETAIL NOT IN USE

County: King County
Location: Lake Washington

Applicant: Wiley Residence
6838 96th Ave SE
Mercer Island, WA 98040

Created: 11/04/21

Last Updated: 2/2/2022 12:04 PM Dray

Datum: CORPS OF ENGINEERS 1919
NE Quarter Of Section 30, Township 24, Range 05

Adjacent Owners:
RITZMAN GARY L+PATRICIA M
6900 96TH AVE SE 98040
SO JIMMY+XINMIN LUO
6830 96TH AVE SE 98040

BUILT BY SEABORN · ESTD 1947 ·

Seaborn Pile Driving
1080 W Ewing St
Seattle, WA 98119

Office: 206-236-1700 ext. 3
www.seabornpiledriving.com

Scope of Work: We propose to remove (10) piles, drive (18) 8" epoxy coated steel piles, add a platform lift, install a moorage cover with translucent roofing, remove the current dock, and build a new dock with grated decking material. We also propose to repair 18 lnft of bulkhead with a 94sqft cove.

SHEET
12.0

# Appendix B:
# Site Photographs

Photo 1 - Existing dock looking waterward.

Photo 2 - Existing dock looking landward.

Photo 3 - Shoreline conditions north of dock

Photo 4 - Shoreline conditions south of dock.  A beach cove will be constructed where concrete stairs are currently.

Photo 5 - Shoreline conditions north of the site.

Photo 6 - Shoreline conditions south of the dock.